
Cessna
AIRCRAFT COMPANY
COMMERCIAL AIRCRAFT DIVISION
Wichita, Kansas
THIS CATALOG SUPERSEDES
ALL 180,A,B,C,D & E AND 182,A,B,C & D PARTS
1 JANUARY 1963

INTRODUCTION.

This illustrated parts catalog has been prepared to aid you in easily and quickly identifying parts of the Cessna Models 180, 182 and Skylane.

This catalog features an index system consisting of:

1. An alphabetical index located in the front of the catalog.

2. A numerical index located in the back of the catalog, which lists all parts and figures in which they appear.

STANDARD PARTS.

Many parts having standard usage have been incorporated into the Cessna Standard System. Parts in this group are designated with the part number prefix "S-" and are described with the phrase "Cessna Standard" in the nomenclature.

For standard hardware items such as Tinnerman nuts, clamps, etc., "AN" and "NAS" numbers have been used. The vendors number also appears in the description column to aid in identifying the correct part.

SERIAL LISTINGS.

The Model 180 serials are as follows:

1953 - 30000 thru 30639
1954 - 30640 thru 31260
1955 - 31261 thru 32150
1956 - 32151 thru 32661
1957 - 32662 thru 50105
1958 - [illegible] thru 50355
1959 - [illegible] thru 50661
1960 - 50662 thru 50911
1961 - 18050912 thru 18051063
1962 - 18051064 thru 18051183
For 1963 Model 180 see 180F-185 Parts Catalog

The Model 182 serials are as follows:

The Model 182

1956 - 33000 thru 33842
1957 - 33843 thru 34753

Model 182 & Skylane

1958 - 34754 thru 51556
1959 - 51557 thru 52358
1960 - 52359 thru 53007
1961 - 18253008 thru 18253598
For 1962 Model 182 see 182E Parts Catalog

USABLE ON CODES....Serial listings in this catalog are noted by a letter code located in the usable on code column which is the extreme right hand column of the parts list page. Usable on codes are applicable only to the figure on which they appear. The code letters and the serials to which they apply are listed at the end of the figure.

If no usable on code appears opposite a first column listing of the figure, the usage is applicable to all models and serials covered by this catalog. If no usable on code appears opposite any indented listing, the usage is applicable to all models and serials covered by the figure on which it appears.

To simplify the coded usage explanations following each figure, the breaks in serial blocks have been omitted.

182 SKYLANE....The 182 Skylane is essentially a 182. Certain distinguishing parts are applicable to the 182 Skylane only. These specific parts are coded for use on the Skylane and either replace, or are in addition to the 182 configuration, otherwise all applicable 182 parts are used on the Skylane and the 182 usage codes should be interpreted as such.

NON-INTERCHANGEABLE PARTS....When parts are not interchangeable with earlier models, all parts applicable to the particular usage are listed. The letter code for the individual part usage is listed in the usable on column opposite each part. Care should be exercised in determining proper serial when ordering to insure receipt of correct part.

INTERCHANGEABLE PARTS....When a later design part is completely interchangeable with the part it replaces, both parts will be serialized and the note "when exhausted use___" will be entered following the listing of the earlier design part. This means that earlier design part should be used on airplanes [illegible] they apply until the supply of these parts is exhausted after which time the later design part must be used. This is done to simplify stocking of parts by distributors and dealers. The earlier part is identical physically and functionally, as the later design part, the difference being the later design part is used on more than one block of airplane serials.

SYMBOLS & PART NUMBER TERMS.

NP - The symbol "NP" appearing in the [illegible] sembly column denotes that the item it [illegible] site is not procurable.

AR - The symbol "AR" appearing in the [illegible] sembly column denotes "As Required" and is used to indicate bulk quantity where an indefinite [illegible] used.

ALT - The symbol "ALT" following the nomenclature of an item is used to denote an alternate part.

LH & RH - The symbols either LH or RH are used following the part nomenclature to denote either left hand or right hand parts.

Other key letter symbols spaced apart from and following the part nomenclature are for cataloging and manufacturing purposes only and are not to be considered by the customer.

A blank entry in the part number column appears before an unprocurable part or installation which is denoted in the "Units Per Assembly" column by the use of the symbol NP.

GROUP ASSEMBLY PARTS LIST ARRANGEMENT.

This section lists all replaceable items in the airplane and these items are detailed on illustrations throughout the section. The index numbers on the illustration are keyed to each accompanying parts list. The purpose of the index numbers is to provide complete and positive identification of the article, but should not be used for procurement purposes.

a. The figure and index number column of the parts list shows the figure number once at the beginning of the list. The figure number is followed by a dash and the indexed number. The remaining index numbers are preceded by dash only.

b. The part number column identifies the item by part number.

c. In the description column, relationship of items covered is shown by the degree of idention of each item, for example: The wing assembly (Figure 1) is listed in column (1) of the description column. The wing structure, is the next lower assembly and is therefore listed in column (2).

d. If two or more assemblies contain a majority of identical parts or the assemblies are left or right hand, the assemblies are listed together and the next lower assemblies or detail parts are listed as common for both assemblies, with the differing parts coded for usage on the correct major assembly.

e. Attaching parts are listed immediately beneath the item to be attached and preceding any detail parts of the item. They are listed in the same column as the item they attach and are preceded by the caption "Attaching Parts." The end of the attaching parts listing is followed by a separating symbol ---*---.

The quantity listed in the "Units Per Assembly" column for attaching parts denotes the quantity necessary to attach only one part. Total quantity necessary to attach more than one part is obtained by multiplying the attaching parts quantity by the number of parts attached.

g. Component parts of the complete airplane which are not included in any assembly, but which are used in conjunction with, or attach to certain assemblies, are listed either preceding the first detail or following the last detail of the assembly or installation, and in the same column as the major assembly or installation.

h. The quantities listed in the "Units Per Assembly" column are the quantity used per figure.

ACCESSORY KITS.

List of accessory kits (AK Kits) available for field installation appears on pages 372 thru 374B of this catalog describes the factory installation of the equivalent field installation AK Kit and the factory installation is considered standard and illustrated as such.

For information regarding peculiarities of field installation kits consult the applicable AK Kit installation instructions.

BULK ITEMS.

Certain items such as flexible air hose, rubber mouldings and channels, windshield sealing strips etc., are noted in the catalog listings as bulk items. These listings also note the cut length of these materials for one installation. When an item is listed as a bulk item, it will be supplied to the dealer in the most convenient bulk length or quantity. Reference to the cut length or quantity per installation provides for the most satisfactory disbursement to the customer.

HOW TO ORDER.

USE YOUR CATALOG TO ORDER PARTS. Use parts and Accessories Order Form Number P-101A, P-102, or P-103, whichever applies and which will be supplied by Cessna on request. Give complete information on addresses and make sure the part number and part name are as shown in the catalog. Be sure to specify quantities. Specify how the order is to be shipped, otherwise it will be sent out in the manner that seems best to the shipper.

SERIAL, COLOR, & CORROSION PROOFING.

Be sure to indicate model and serial number of the airplane. Serial number is very important to properly identify parts used on each airplane, when color is involved. Be sure to specify what color. If corrosion proofing is desired add the letters "CP" following the part number.

DISTRIBUTOR ORDERS.

Distributors will send all orders to the factory with instructions as to the shipping destination. The factory prefers not to make C.O.D. shipments for the distributor and all billing will be made to the distributor in the case of direct shipments.

DEALER ORDERS.

Dealers will place all of their parts order requirements with their distributor. The factory will not honor orders received directly from a dealer. It will be necessary for us to forward it to the distributor for his action. Therefore, dealer orders sent direct to the distributor will result in much faster delivery on any parts that are required.

RETAIL ORDERS.

Retail orders will not be honored by the factory. They are to be placed with the dealer or distributor in the owner's territory and when received directly by the factory will be forwarded to the distributor from whose

territory it was received. Considerable saving in time will result to the owner if his orders are placed with his dealer or distributor.

Cessna Aircraft Company reserves the right to cancel, add or change the parts and assemblies described in this catalog without notice.

FINISH & TRIM PLATE

The "FINISH AND TRIM" plate is located on the left side of the airplane on the lower door jamb directly above the M.A.A. name plate.

This plate indicates the model year, exterior paint color, upholstery scheme and interior trim colors.

The following diagram is an example showing the sequence and definition of each code symbol on the "FINISH AND TRIM" plate.

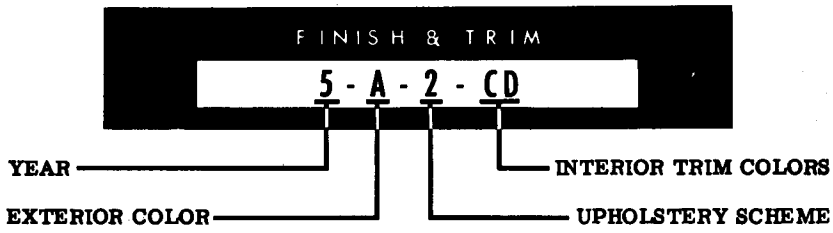

FINISH & TRIM NUMBER (5 - A - 2 - CD)
"5" = 1955 Model
"A" = Mallard Green Exterior Color
"2" = Brown & Beige Upholstery
"CD" = Trooper Tan & Nubian Bronze Interior Trim

CODE CHART
PAINT & UPHOLSTERY COMBINATIONS
Model 180

YEAR	Color: EXTERIOR	Color: INTERIOR	Color: INTERIOR TRIM	[illegible]
1955	Metallic red	New lima tan	New lima tan	#9544 Synthetic Gull Gray Enamel
	Metallic blue	New lima tan	New lima tan	
1954	Woodland Green metallic	Trooper tan	Nubian bronze	#9544 Synthetic Gull Gray Enamel
	Jet red	Trooper tan	Admiral blue	

	[illegible]			[illegible]		[illegible]	
	CODE	CODE	COLOR	CODE	COLOR	CODE	COLOR
1955	5	A	Mallard Green	2	Brown & Beige	C	Trooper Tan
		B	Desert Red			D	Nubian Bronze
		F	Tangerine	3	Turquoise & Beige	E	Mallard Green
		G	Mimosa Yellow				
1956	6	A	Black (Hi-gloss)	2	Coral & White	F	Turquoise
		B	Pawnee Yellow			G	Black (Hi-gloss)
		C	Aqua Blue	3	Turquoise & White	H	Parchment White
		D	Scarlet (Red)				
		E	Regal Red				

CODE CHART
PAINT & UPHOLSTERY COMBINATIONS
Model 180

	CODE	CODE	COLOR	CODE	COLOR	CODE	COLOR
1957	7	A	Raven Black 27-515	2	Cascade Green	F	Black (Hi-gloss) 27H-515
		B	Jamaica Coral 27-13556				Black (Semi-gloss) 27-5546
		C	Empire Green 27-13371	3	Target Red		Parchment White 27-12098
		D	Sunstone Yellow 27-505				
		E	Palomino Cream 27-13546				
1958	8	A	INDIO BROWN CES 1054-201 or -220* (27H-14596) or (82-14596)	2	SAHARA GOLD (GOLD & BLACK)	H	(BLACK (HI-GLOSS) CES 1054-151 (27-515)
		B	ALPINE WHITE CES 1054-195 or -187* (27H-14591) or (82-14591)	3	ANKARA COPPER (COPPER & BEIGE)		BLACK (SEMI-GLOSS) CES 1054-156 (5546)
		C	YUMA YELLOW CES 1054-202 or -209* (27-12560) or (82-12560)	4	CAMEL TAN (TAN & BEIGE)		IVORY CES 1054-200 (27-14208)
		D	RIO ORANGE CES 1054-203 or -218* (27H-14594) or (82-14594)	5	AZURE BLUE (BLUE & IVORY)		
		E	ALLEGHENY GREEN CES 1054-204 or -219* (27H-14597) or (82-14597)				
		F	NAIROBI BLACK (Hi-Gloss) CES 1054-151 or -171* (27-515) or (82-515)				
		G	SATURN ORANGE CES 1054-205 or -217* (27H-14858) or (82-14868)				
		J	CUMBERLAND CREAM CES 1054-216 or -192* (27H-14592) or (82-14592)				
1959	9	A	PARIS BLACK CES 1054-151 (27-515)	2	SEA-FOAM GREEN	P	BLACK (SEMI-GLOSS) CES 1054-156 (5546)
		D	MAHOGANY BROWN CES 1054-226 (27H-16387)				
		E	FOREST GREEN CES 1054-227 (27H-16388)				
		F	TERRA COTTA BROWN CES 1054-228) (27H-16395)				
		G	DAMASK RED CES 1054-229 (27H-12450)	3	MISTY CHARCOAL	Q	IVORY CES 1054-200 (27-14208)
		H	COLONIAL BLUE CES 1054-230 (27H-16390)				
		J	CRIMSON RED CES 1054-231 (27H-16392)				
		K	SNOW CREST WHITE CES 1054-235 (27H-16385)				
		SP	SPECIAL COLORS	1	SPECIAL UPHOLSTERY	SP	SPECIAL COLORS

Note:
* Vinyl finish will be used in lieu of lacquer as base color on allover paint jobs.

CODE CHART
PAINT & UPHOLSTERY COMBINATIONS
Model 182

CODE	CODE	COLOR	CODE	COLOR	CODE	COLOR
6	A	Black (Hi-gloss) 27-515	2	Coral & White	F	Torquoise 27-12243
	B	Pawnee Yellow 27-12560			G	Black (Hi-gloss) 27H-515
	C	Aqua Blue 27-12312	3	Torquoise & White		
	D	Scarlet (Red) 27-13600			H	Parchment White 27-12098
	E	Regal Red 27-13554				
7	A	Raven Black 27-515	2	Cascade Green	F	Black (Hi-gloss) 27H-515
	B	Jamaica Coral 27-13556				Black (Semi-gloss) 27-5546
	C	Empire Green 27-13371	3	Target Red		
	D	Sunstone Yellow 27-505				Parchment White 27-12098
	E	Palomino Cream 27-13546				
8	A	INDIO BROWN CES 1054-201 or -220* (27H-14596) or (82-14596)	2	SAHARA GOLD (GOLD & BLACK)	H	BLACK (HI-GLOSS) CES 1054-151 (27-515)
	B	ALPINE WHITE CES 1054-195 or -187* (27H-14591) or (82-14591)	3	ANKARA COPPER (COPPER & BEIGE)		BLACK (SEMI-GLOSS) CES 1054-156 (5546)
	C	YUMA YELLOW CES 1054-202 or -209* (27-12560) or (82-12560)	4	CAMEL TAN (TAN & BEIGE)		IVORY CES 1054-200 (27-14208)
	D	RIO ORANGE CES 1054-203 or -218* (27H-14594) or (82-14594)	5	AZURE BLUE (BLUE & IVORY)		
	E	ALLEGHENY GREEN CES 1054-204 or -219* (27H-14597) or (82-14597)				
	F	NAIROBI BLACK (Hi-Gloss) CES 1054-151 or -171* (27-515) or (82-515)				
	G	SATURN ORANGE CES 1054-205 or -217* (27H-14858) or (82-14868)				
	J	CUMBERLAND CREAM CES 1054-216 or -192* (27H-14592) or (82-14592)				

Note:
* Vinyl finish will be used in lieu of lacquer as base color on allover paint jobs.

CODE CHART
PAINT & UPHOLSTERY COMBINATIONS
Model 182

1953

CODE	CODE	COLOR	CODE	COLOR	CODE	COLOR
9	A	PARIS BLACK CES 1054-151 (27-515)	2	MOJAVE BIEGE	P	BLACK (SEMI-GLOSS) CES 1054-156. (5546)
	D	MAHOGANY BROWN CES 1054-226 (27H-16387)				
	E	FOREST GREEN CES 1054-227 (27H-16388)				
	F	TERRA COTTA BROWN CES 1054-228 (27H-16395)				
	G	DAMASK RED CES 1054-229 (27H-12450)	3	SUN-DUSK CORAL	Q	IVORY CES 1054-200 (27-14208)
	H	COLONIAL BLUE CES 1054-230 (27H-16390)				
	J	CRIMSON RED CES 1054-231 (27H-16392)				
	K	SNOW CREST WHITE CES 1054-235 (27H-16385)				
	SP	SPECIAL COLORS	1	SPECIAL UPHOLSTERY	SP	SPECIAL COLORS

CODE CHART
PAINT & UPHOLSTERY COMBINATIONS
Model 182 Skylane

1953 Improved

CODE	CODE	COLOR	CODE	COLOR	CODE	COLOR
9	A	PARIS BLACK CES 1054-151 (27-515)	2	MOJAVE BIEGE MYLAR TIARA	P	BLACK (SEMI-GLOSS) CES 1054-156 (5546)
	B	STARBURST YELLOW CES 1054-152 (27-12560)				
	C	POWDER BLUE CES 1054-153 (27-12312)				
	D	MAHOGANY BROWN CES 1054-226 (27H-16387)				
	E	FOREST GREEN CES 1054-227 (27H-16388)				
	F	TERRA COTTA BROWN CES 1054-228 (27H-16395)				
	G	DAMASK RED CES 1054-229 (27H-12450)	3	SUN-DUSK CORAL MYLAR TIARA	Q	IVORY CES 1054-200 (27-14208)
	H	COLONIAL BLUE CES 1054-230 (27H-16390)				
	J	CRIMSON RED CES 1054-231 (27H-16392)				
	L	MINT GREEN CES 1054-238 (27H-16520)				
	M	LONDON GRAY CES 1054-239 (27H-15959)				
	N	SNOW CREST WHITE CES 1054-240 (82-16385)				
	SP	SPECIAL COLORS	1	SPECIAL UPHOLSTERY		SPECIAL COLORS

CODE CHART
PAINT & UPHOLSTERY COMBINATIONS
Model 180

CODE	CODE	COLOR	CODE	COLOR	CODE	COLOR
1958 0	A	ONYX BLACK CES 1054-151	3	CORTEZ GOLD WITH BLACK	P	BLACK CES 1054-156
	B	BUCKSKIN TAN CES 1054-266				
	C	VERMILION CES 1054-166				
	D	MIST GREEN CES 1054-267				
	E	APRICOT CES 1054-269				
	F	CHERRY RED CES 1054-229	2	AZTEC COPPER WITH BEIGE	Q	NATURAL CES 1054-259
	G	SUNLIGHT CES 1054-268				
	H	ITALIAN GOLD CES 1054-265				
	J	PEARL WHITE CES 1054-261				
	V	HIGH VISIBILITY CES 1054-250				
	SP	SPECIAL COLORS	1	SPECIAL UPHOLSTERY	SP	SPECIAL COLORS

CODE CHART
PAINT & UPHOLSTERY COMBINATIONS
Model 182

CODE	CODE	COLOR	CODE	COLOR	CODE	COLOR
1958 0	A	ONYX BLACK CES 1054-151	3	GOLDEN PALOMINO	P	BLACK CES 1054-156
	B	BUCKSKIN TAN CES 1054-266				
	C	VERMILION CES 1054-166				
	D	MIST GREEN CES 1054-267				
	E	APRICOT CES 1054-269				
	F	CHERRY RED CES 1054-229	2	MAYA TURQUOISE	Q	NATURAL CES 1054-259
	G	SUNLIGHT CES 1054-268				
	H	ITALIAN GOLD CES 1054-265				
	J	PEARL WHITE CES 1054-261				
	V	HIGH VISIBILITY CES 1054-250				
	SP	SPECIAL COLORS	1	SPECIAL UPHOLSTERY	SP	SPECIAL COLORS

CODE CHART
PAINT & UPHOLSTERY COMBINATIONS
Model 182 Skylane

1968 SKYLANE

CODE	CODE	COLOR	CODE	COLOR	CODE	COLOR
0	A	INDIAN BROWN CES 1054-198	3	MAYA TURQUOISE	P	BLACK CES 1054-156
	B	PEARL WHITE CES 1054-262				
	C	APRICOT CES 1054-269				
	D	SUNLIGHT CES 1054-268				
	E	ONYX BLACK CES 1054-151				
	F	CHERRY RED CES 1054-229				
	G	EMERALD GREEN CES 1054-264	2	GOLDEN PALOMINO	Q	NATURAL CES 1054-259
	H	MIST GREEN CES 1054-267				
	J	ITALIAN GOLD CES 1054-265				
	K	VERMILION CES 1054-166				
	L	COLONIAL BLUE CES 1054-230				
	M	BUCKSKIN TAN CES 1054-266				
	V	HIGH VISIBILITY CES 1054-250				
	SP	SPECIAL COLORS	1	SPECIAL UPHOLSTERY	SP	SPECIAL COLORS

CODE CHART
PAINT & UPHOLSTERY COMBINATIONS
Model 180

YEAR CODE	EXTERIOR PAINT CODE	EXTERIOR PAINT COLOR	UPHOLSTERY CODE	UPHOLSTERY COLOR	INTERIOR TRIM CODE	INTERIOR TRIM COLOR	Serial Listing
1961	O	CLASSIC IVORY CES 1054-325	2	PINE FROST (GREEN)	Z	BLACK (SEMI-GLOSS) CES 1054-156	18050912 THRU 18051063
1	P	STARGLO YELLOW CES 1054-326					
	Q	RANGOON RED CES 1054-327					
	R	NOCTURNAL GREEN CES 1054-328					
	S	SPRING GREEN CES 1054-329	3	COPPER COTTA		NATURAL CES 1054-259	
	V	DUSK BLUE CES 1054-333					
	W	CELESTIAL BLUE CES 1054-334					
	X	WINCHESTER GRAY CES 1054-335	4	MOCHA (TAN)			
	Y	COPPERTONE BROWN CES 1054-336					
	SP	SPECIAL COLORS	1	SPECIAL UPHOLSTERY	SP	SPECIAL COLORS	

CODE CHART
PAINT & UPHOLSTERY COMBINATIONS
Model 182

YEAR CODE	EXTERIOR PAINT CODE	EXTERIOR PAINT COLOR	UPHOLSTERY CODE	UPHOLSTERY COLOR	INTERIOR TRIM CODE	INTERIOR TRIM COLOR	Serial Listing
1961	O	CLASSIC IVORY CES 1054-325	2	PINE FROST (GREEN)	Z	BLACK (SEMI-GLOSS) CES 1054-156	18253008 THRU 18253598
1	P	STARGLO YELLOW CES 1054-326					
	Q	RANGOON RED CES 1054-327					
	R	NOCTURNAL GREEN CES 1054-328					
	S	SPRING GREEN CES 1054-329	3	COPPER COTTA		NATURAL CES 1054-259	
	V	DUSK BLUE CES 1054-333					
	W	CELESTIAL BLUE CES 1054-334					
	X	WINCHESTER GRAY CES 1054-335	4	MOCHA (TAN)			
	Y	COPPERTONE BROWN CES 1054-336					
	SP	SPECIAL COLORS	1	SPECIAL UPHOLSTERY	SP	SPECIAL COLORS	

CODE CHART
PAINT & UPHOLSTERY COMBINATIONS
Model 182 Skylane

YEAR	EXTERIOR PAINT			UPHOLSTERY		INTERIOR TRIM		Serial Listing
	CODE	CODE	COLOR	CODE	COLOR	CODE	COLOR	
1961 SKYLANE	1	O	CLASSIC IVORY CES 1054-325	2	PINE FROST (GREEN)	Z	BLACK (SEMI-GLOSS) CES 1054-156	18253008 THRU 18253598
		P	STARGLO YELLOW CES 1054-326					
		Q	RANGOON RED CES 1054-327					
		R	NOCTURNAL GREEN CES 1054-328					
		S	SPRING GREEN CES 1054-329					
		T	ORCHID CES 1054-330					
		V	DUSK BLUE CES 1054-333					
		W	CELESTIAL BLUE CES 1054-334	3	COPPER COTTA		NATURAL CES 1054-259	
		X	WINCHESTER GRAY CES 1054-335					
		Y	COPPERTONE BROWN CES 1054-336					
		A	PATINA IVORY CES 1054-337					
		G	SUNBEAM YELLOW CES 1054-344					
		H	SANDSTONE BEIGE CES 1054-345					
		N	FROST BLUE CES 1054-351					
		SP	SPECIAL COLORS	1	SPECIAL UPHOLSTERY	SP	SPECIAL COLORS	

CODE CHART
PAINT & UPHOLSTERY COMBINATIONS
Model 180

1962	CODE	CODE	COLOR	CODE	COLOR	CODE	COLOR	Serial Listing
	2	A	MUTED BEIGE CES 1054-439 or -399*	2	SHADOW FAWN (UTILITY)	Q	BLACK (SEMI-GLOSS) CES 1054-156	18051064 THRU 18051183
		B	VESTAL WHITE CES 1054-398 or -170*					
		C	JONQUIL YELLOW CES 1054-402 or -416*					
		D	MINT GREEN CES 1054-238 or -412*					
		E	TURQUOISE TINGE CES 1054-406 or -393*	3	PALMETTO GREEN			
		F	VALOR RED CES 1054-409 or -417*					
		G	CHEVRON RED CES 1054-401					
		H	GINGER CES 1054-403					
		J	REGAL GREEN MET. CES 1054-404	4	POMPEII RUST		NATURAL CES 1054-259	
		K	TAHOE BLUE MET. CES 1054-407					
		L	HERMOSA TURQUOISE CES 1054-408					
		M	DEEP MAHOGANY CES 1054-413					
		N	EXECUTIVE GRAY MET. CES 1054-411					
		SP	SPECIAL COLORS	1	SPECIAL UPHOLSTERY	SP	SPECIAL COLORS	

NOTE: WHEN ORDERING PAINT SPECIFY CES 1054 DASH NUMBER. EXAMPLE: CES1054-439

*On all over painted airplanes, base color will be vinyl. All other colors will be lacquer.

ALPHABETICAL INDEX

ALPHABETICAL INDEX

A

ABRASION BOOT STABILIZER, 29
ABRASION BOOT, 29
ABRASION BOOTS KIT-STABILIZER, 372
ACCESS DOOR-COWL, 180,182,185,188,191,193A
ACCESSORY KITS-LIST OF, 372,374,374A,374B
ACTUATOR ASSEMBLY-TILTING FRONT SEAT, 145
ACTUATOR BOOT-STABILIZER, 367
ACTUATOR HINGE, 367
ACTUATOR-STABILIZER, 299,367
ADAPTER ASSEMBLY-FILLERNECK, 15
ADAPTER ASSEMBLY-FUEL WELL, 15
ADAPTER ASSEMBLY-TANK DRAIN, 15,17
ADAPTER RING-NOSE CAP, 179
ADAPTER-FUEL SELECTOR VALVE, 265,266C,268
ADAPTER-OIL TEMPERATURE LEAD TO ENGINE, 198
ADAPTER-OIL TEMPERATURE, 201
ADAPTER-WEMAC, 231
ADJUSTABLE FRONT SEAT, 145D
ADJUSTABLE SEAT BACK, 145D
ADJUSTABLE SEAT-BOTTOM MECHANISM, 145D
ADJUSTER ASSEMBLY-SENSITIVITY-TACTAIR, 319,319B
AFT SECTION ASSEMBLY-FUSELAGE, 37,39,81
AILERON AMPLIFIER-TACTAIR, 315C,319C
AILERON ASSEMBLY, 18
AILERON BALANCE WEIGHT, 18
AILERON BELLCRANK, 18,290
AILERON CABLE RUB STRIP, 67,69
AILERON CARRY THRU BAR, 288
AILERON CONTROL CABLE, 288
AILERON CONTROL CHAIN, 288
AILERON CONTROL SYSTEM INSTALLATION, 288
AILERON HINGE, 18
AILERON INSTALLATION, 3,4A,18
AILERON PUSH-PULL ROD, 18,290
AILERON SERVO, 314,315C,318
AILERON SPAR, 18
AIR BOX COVER, 221
AIR BOX FILTER, 203,207
AIR BOX-CARBURETOR, 203,205,209
AIR CONTROL-CABIN, 149,159,155,168,170C
AIR INTAKE DUCT-CARBURETOR, 191,193A
AIR INTAKE EXPANDER, 191,193A
AIR OUTLET DEFLECTOR, 235
AIR SCOOP BOX, 183,188
AIR SCOOP, 180,183
AIR SPEED INDICATOR, 160,163,169,170D,253
AIR TEMP. BULB-CARBURETOR, 204
AIR TEMP. GAGE-CARBURETOR, 162,165,167,170A, 204,207,211
AIR TEMP. GAGE-OUTSIDE, 175
AIR VALVE, 203
AIR VENT BOX, 231
AIR VENT CONTROL, 231A
AIR VENT DOOR, 53,58
AIR VENT INLET, 53,58,231
AIR VENT SEAL, 53,58,231
AIR VENT-OUTSIDE, 231
AIRBOX GASKET-CARBURETOR, 211
AIRCRAFT BATTERY, 301
AK KITS-LIST OF, 372,373,374,374A,374B
ALTIMETER-SENSITIVE, 160,163,169,253
ALTIMETER, 160,163,169,170D,253
ALTITUDE HOLD INSTALLATION, 315B
AMMETER, 161,168,170C
AMPHIBIAN AIRSPEED INDICATOR, 160,163,169
AMPHIBIAN BALLAST, 330
AMPHIBIAN ENGINE MOUNT, 330
AMPHIBIAN FITTINGS, 329
AMPHIBIAN KIT-FLOATPLANE CONVERSION, 372
AMPHIBIAN KIT-LANDPLANE CONVERSION, 372
AMPHIBIAN PLACARD, 329

A (cont)

AMPLIFER-AILERON-TACTAIR, 315C,319C
AMPLIFIER-ELEVATOR-TACTAIR, 315D
AMPLIFIER-TACTAIR, 314,318
ANTENNA, SEE CESSNA ELECTRONICS MANUAL
ARM ASSEMBLY-CABIN HEATER VALVE, 233
ARM ASSEMBLY-SEAT LH, 145F
ARM ASSEMBLY-TAILWHEEL, 353
ARM ASSEMBLY-WINDOW-DOOR, 109, 115
ARM REST ASSEMBLY, 127,135
ARM REST, 127
ARM SHIMMY DAMPNER, 98A,97
ARM-GOVERNOR CONTROL, 197
ARM-PROPELLER CONTROL, 199
ARM-SEAT BACK LATCH, 147
ARM-STEERING, 101,102A
ASH RECEIVER KNOB, 153,155
ASH RECEIVER, 132,135,153,155
ASH TRAY, 132,135,153,155
ASSIST HANDLE, 122
ASSIST STRAP, 134
AUTO PILOT INSTALLATION-TACTAIR T-1, 317
AUTO PILOT INSTALLATION-TACTAIR T-3, 313,315B
AUTO PILOT INSTALLATION-TACTIAR T-2, 319,319B
AUTO PILOT-TACTAIR KIT, 372
AUTOPILOT KIT-CESSNA NAV-O-MATIC-PANEL MOUNTED,372
AUTOPILOT KIT-CESSNA NAV-O-MATIC-DECK MOUNTED, 372
AUTOPILOT KIT-JAVELIN SINGLE AXIS, 372
AUXILIARY FUEL FILLER NECK, 269
AUXILIARY FUEL GAGE, 165,167,170A,271
AUXILIARY FUEL PLACARD, 158,271
AUXILIARY FUEL SYSTEM FLOOR, 269
AUXILIARY FUEL SYSTEM, 269
AUXILIARY PASSENGER PLACARD, 129,343
AUXILIARY POWER RECEPTACLE, 301,303,303B
AUXILIARY SEAT BACKREST, 148C
AUXILIARY SEAT CUSHION, 148C
AUXILIARY SEAT KIT, 372
AUXILIARY SEAT, 148C
AUXILIARY TANK GAS CAP, 269
AXLE BOOT-CROSSWIND WHEEL, 349
AXLE-CROSSWING GEAR, 349
AXLE-HEAVY DUTY, 91,93
AXLE-LANDING GEAR, 91,93
AXLE-NOSE GEAR,98A
AXLE-SKI KIT, 374
AXLE-SKI LANDING GEAR, 91,93
AXLE-TAILWHEEL, 353

B

BACK ASSEMBLY-FRONT SEAT, 139
BACK ASSEMBLY-REAR SEAT, 147
BACK ASSEMBLY-REAR SEAT-STRETCHER, 176
BACK ASSEMBLY-SEAT UPHOLSTERED-ADJUSTABLE SEAT, 145D
BACK ASSEMBLY-UPHOLSTERED TILTING FRONT SEAT, 145
BACK ASSEMBLY-UPHOLSTERED-RECLINING SEAT, 145B
BACKREST ASSEMBLY-AUXILIARY SEAT, 148C
BAFFLE ASSEMBLY-ENGINE, 203
BAFFLE ASSEMBLY-OIL COOLER, 204,207,211,220
BAFFLE ASSEMBLY-RADIO SPEAKER, 309
BAFFLE INSTALLATION-ENGINE, 209,214,217,219
BAFFLE-OIL COOLER, 220
BAG ASSEMBLY-STRETCHER WALL, 176
BAGGAGE COMPARTMENT FILLER, 129
BAGGAGE COMPARTMENT CARPET, 130
BAGGAGE DOOR GUSSET, 46
BAGGAGE DOOR HINGE, 121
BAGGAGE DOOR INSTALLATION-FUSELAGE, 121
BAGGAGE DOOR JAMB, 42,46

ALPHABETICAL INDEX

B (cont)

BAGGAGE DOOR LATCH, 121
BAGGAGE DOOR LOCK CAM, 121
BAGGAGE DOOR LOCK, 121
BAGGAGE DOOR PANEL, 129
BAGGAGE DOOR PUSH-PULL ROD, 121
BAGGAGE DOOR STOP CHAIN, 121
BAGGAGE DOOR, 37,39,121
BAGGAGE LOADING DECAL, 271
BAGGAGE PLACARD, 129,341,343
BAGGAGE SCUFF PLATE, 129
BAGGAGE SHELF SUPPORT, 42
BAGGAGE SHELF, 129
BALL JOINT-PROPELLER CONTROL, 197
BALL-CONTROL TUBE, 153,169,149,157,170D
BALLAST-BULKHEAD STA 230.187-AMPHIBIAN, 330
BANK INDICATOR, 162,165,169,170D
BAR ASSEMBLY-AILERON CARRY THRU, 288
BATTERY BOX INSTALLATION, 82
BATTERY BOX, 83
BATTERY CABLE, 301
BATTERY GROUND CABLE, 301
BATTERY-AIRCRAFT, 301
BEACON ASSEMBLY-ROTATING, 307
BEACON DOME-ROTATING, 307
BEACON-ROTATING, 301,307
BEARING ASSEMBLY-OUTBOARD-PEDALS, 245
BEARING BLOCK-SPAR, 59,63,67,69
BELLCRANK ASSEMBLY-AILERON, 290
BELLCRANK ASSEMBLY-COWL FLAPS, 249
BELLCRANK ASSEMBLY-ELEVATOR REAR, 291
BELLCRANK ASSEMBLY-FLAP, 21
BELLCRANK ASSEMBLY-PEDALS, 246
BELLCRANK ASSEMBLY-PARKING BRAKE, 240,243
BELLCRANK ASSEMBLY-RUDDER, 31,33
BELLCRANK ASSEMBLY-SEAT SCREW, 145F
BELLCRANK ASSEMBLY-TAILWHEEL STEERING, 285
BELLCRANK ASSEMBLY-WATER RUDDER CABLE, 323
BELLCRANK BRACKET-ELEVATOR, 59
BELLCRANK-AILERON, 18
BELLCRANK-ELEVATOR FORWARD, 291
BELLCRANK-FLAP, 21,296
BELT EXTENSION, 177A
BELT-SAFETY, 140,143,148,148C
BELT-SEAT, 140,143,148,148C
BEZEL-GAGE-OXYGEN, 333
BLADE ASSEMBLY-PROPELLER, 357,359,363
BLAST TUBE-GENERATOR, 204,207,211
BLOCK ASSEMBLY-TEE-TACTAIR, 313
BLOCK-FUSELAGE SPAR BEARING, 59,63,67,69
BLOCK-STRUT ATTACHMENT-FLOATPLANE, 323,325,329
BLOWER ASSEMBLY-HEATER, 235
BODY ASSEMBLY-FUEL STRAINER, 276
BODY-GOVERNOR, 343B
BODY-MASTER CYLINDER, 365
BODY-PITOT TUBE, 254
BOLT-DOOR LATCH, 118
BONDING STRAP-ENGINE, 203,205,209
BOOT ASSEMBLY-STEERING LINKAGE, 56
BOOT-ABRASION, 29
BOOT-ACTUATOR-STABILIZER, 367
BOOT-AXLE-CROSSWIND WHEEL, 349
BOOT-EXPANDER, 191,193A
BOOT-NOSE WHEEL STEERING ROD, 55
BOWL-GLASS-FUEL STRAINER, 276
BOX ASSEMBLY-AIR SCOOP, 183,188
BOX ASSEMBLY-AIR VENT, 231
BOX ASSEMBLY-BATTERY, 83
BOX ASSEMBLY-GLOVE, 149,154,155,173
BOX ASSEMBLY-SHUTTER WINTERIZATION, 225
BOX DOOR-GLOVE, 151,154,157,173
BOX FILTER-AIR, 203,207

B (cont)

BOX HINGE-GLOVE, 157,173
BOX INSTALLATION-BATTERY, 82
BOX-CARBURETOR AIR, 203,205,209
BOX-GLOVE, 170,171
BOX-MAP, 173
BRACE-INSTRUMENT PANEL, 51,53,56,58
BRACKET-BRAKE CYLINDER, 245
BRACKET-ELEVATOR BELLCRANK, 69
BRACKET-SEAT BELT ATTACHMENT, 140,143,148
BRACKET-TAB PULLEY, 46
BRAKE & RUDDER RETURN SPRING, 245
BRAKE ASSEMBLY-CROSSWIND GEAR, 351
BRAKE ASSEMBLY, 345
BRAKE BELLCRANK-PARKING, 240,243
BRAKE CABLE-PARKING, 240
BRAKE CATCH-PARKING, 240,243
BRAKE CONTROL-PARKING, 149,153,239,241
BRAKE CROSSARM-PARKING, 239,241
BRAKE CYLINDER BRACKET, 245
BRAKE CYLINDER HEAD, 345,351
BRAKE CYLINDER-MASTER, 240,243,245
BRAKE CYLINDER, 240,243,245,365
BRAKE DRAIN PLUG, 345
BRAKE HANDLE-PARKING, 239,241
BRAKE HOUSING, 345
BRAKE HUB-DUAL, 246
BRAKE INSTALLATION-PARKING, 239,241
BRAKE LINE, 91,92,92A,93,239,291
BRAKE LINING-CROSSWIND GEAR, 351
BRAKE LINKAGE-PARKING, 239,241
BRAKE MASTER CYLINDER, 365
BRAKE PEDAL, 245
BRAKE PISTON, 345
BRAKE POSITIONING RACK-PARKING, 239,241
BRAKE SYSTEM INSTALLATION, 239,241
BRAKE-PARKING, 239,241
BREAKER BUSS STRIP-CIRCUIT, 149
BREATHER LINE, 203,205,209
BULB-CARBURETOR AIR TEMPERATURE, 204
BULB-CHARGE INDICATOR, 155,170C
BULB-NAVIGATION LIGHT, 4,4C
BULB-TAIL LIGHT, 89
BULB-VACUUM WARNING LIGHT, 171
BULKHEAD ASSEMBLY-AFT SECTION STA 108.00, 81
BULKHEAD ASSEMBLY-AFT SECTION STA 140.00, 81
BULKHEAD ASSEMBLY-AFT SECTION STA 172.00, 81
BULKHEAD ASSEMBLY-AFT FRONT DOORPOST, 56,63
BULKHEAD ASSEMBLY-CAMERA STRUCTURE, 335
BULKHEAD ASSEMBLY-FRONT SECTION TUNNEL, 51,53
BULKHEAD ASSEMBLY-FUSELAGE STA 65.33, 41,45,67,69
BULKHEAD ASSEMBLY-FUSELAGE-STA 90.00, 42,45
BULKHEAD ASSEMBLY-LANDING GEAR STA 44.00 TO 65.33, 79
BULKHEAD ASSEMBLY-LANDING GEAR, 53,59
BULKHEAD ASSEMBLY-LOWER FRONT DOORPOST, 63
BULKHEAD ASSEMBLY-PROPELLER SPINNER, 195
BULKHEAD ASSEMBLY-STA 44.00, 41
BULKHEAD ASSEMBLY-TAILCONE STA 215.687, 85
BULKHEAD ASSEMBLY-TAILCONE STA 230.187, 87
BULKHEAD ASSEMBLY-TAILCONE HORIZONTAL, 85,87
BULKHEAD ASSEMBLY-TAILCONE STA 209.00, 85,87
BULKHEAD STA 44.00, 45
BULKHEAD-CIRCULAR-CENTER LINE CAMERA, 338
BULKHEAD-FUSELAGE LOWER STA 8.125, 51,55
BULKHEAD-INSTRUMENT PANEL SUPPORT, 51,53,55,56
BULKHEAD-REAR SEAT CATCH, 45
BULKHEAD-RUDDER OUTBOARD, 55,58
BULKHEAD-RUDDER PEDAL OUTBOARD, 51
BULKHEAD-TUNNEL FORWARD, 73
BUNGEE ASSEMBLY, 287,368
BUSHING ASSEMBLY-CABIN HEATER, 233
BUSHING-ENGINE MOUNT, 197,199
BUSS STRIP-CIRCUIT BREAKER, 149

ALPHABETICAL INDEX

C

CABIN AIR CONTROL, 149,153,155,168,170C
CABIN AIR SCOOP, 9,9B
CABIN AIR VALVE, 233
CABIN DOOR HINGE, 105,107,111,113
CABIN DOOR INSTALLATION LH, 105,107
CABIN DOOR INSTALLATION-RH, 111,113,115B
CABIN DOOR LOCK, 105,107
CABIN DOOR STRUCTURE LH, 105,107
CABIN DOOR STRUCTURE RH, 111,113,115B
CABIN DOOR UPHOLSTERY, 126
CABIN HEADLINER, 123
CABIN HEAT CONTROL, 149,153,155,168,170C,233,234
CABIN HEATER BUSHING, 233
CABIN HEATER DUCT, 233
CABIN HEATER INSTALLATION-MANIFOLD, 233
CABIN HEATER MANIFOLD, 233
CABIN HEATER VALVE, 233
CABIN HEATER VAVLE ARM, 233
CABIN LIGHTS, SPEAKER & COURTESY LIGHT INSTALLATION, 301,309
CABIN TOP, 41,46
CABIN VENTILATION SYSTEM, 231
CABLE ASSEMBLY-PARKING BRAKE, 240
CABLE ASSEMBLY-TACTAIR, 314,318
CABLE ASSEMBLY-TAILWHEEL STEERING, 103,285
CABLE FAIRING-TAILWHEEL STEERING, 82
CABLE-AILERON CONTROL, 288
CABLE-BATTERY GROUND, 301
CABLE-ELEVATOR CONTROL, 291
CABLE-ELEVATOR TRIM, 293
CABLE-FLAP, 295
CABLE-GROUND SERVICE PLUG, 303
CABLE-RUDDER CONTROL, 282,285,287
CABLE-STABILIZER TRIM CONTROL, 299
CABLE-WATER RUDDER RETRACT, 323
CAM-BAGGAGE DOOR LOCK, 121
CAM-FLAP LEVER, 296
CAM-RECLINER-SEAT, 145B
CAM-SEAT BACK, 145F
CAMERA FLOORBOARD, 339
CAMERA GAS DEFLECTOR, 338
CAMERA KIT-CENTERLINE, 372
CAMERA SEAL, 335
CAMERA SEAT, 335,339
CAMERA WINDOW COVER, 335
CAMERA-CENTER LINE, 337
CAMERA-OFF CENTER, 335
CAP & ADAPTER ASSEMBLY-FUEL, 16,17
CAP HANDLE-FUEL, 17B
CAP-FRONT SPAR, 41,46
CAP-FUEL, 15,17B
CAP-GAS-AUXILIARY TANK, 269
CAP-GAS, 15,17B
CAP-HUB, 92A,95
CAP-RUDDER TIP-SWEPT TAIL, 27,33
CAP-RUDDER TRIM, 287
CARBURETOR AIR BOX COVER, 221
CARBURETOR AIR BOX, 203,205,209
CARBURETOR AIR INTAKE DUCT, 191,193A
CARBURETOR AIR TEMP. BULB, 204
CARBURETOR AIR TEMPERATURE SYSTEM KIT, 372
CARBURETOR AIR TEMP. GAGE, 162,165,167,170A, 204,207,211
CARBURETOR AIRBOX GASKET, 211
CARBURETOR FILTER, 192,193A,211
CARBURETOR HEAT CONTROL, 149,153, 155,167,170A,197,199
CARBURETOR MIXTURE CONTROL, 149, 153,155,168,170C,198,201
CARD COVER-COMPASS, 160,163,169,170C
CARD-COMPASS, 160,163
CARD-CORRECTION, 169,170C

C (cont)

CARGO TIE DOWN KIT, 372
CARGO TIE DOWN RINGS, 175
CARPET & KICK PLATE INSTALLATION, 129
CARPET ASSEMBLY-BAGGAGE COMPARTMENT, 130
CARPET ASSEMBLY-CABIN FLOOR CENTER, 129
CARPET ASSEMBLY-TUNNEL, 130
CARPET-SIDE STRIP, 130
CASE ASSEMBLY-MAP, 173
CASE-OXYGEN MASK, 333
CASTING-TAILGEAR MOUNTING, 85
CATAGORY PLACARD, 151
CATCH-DOOR-GLOVE BOX, 151,154,155,173
CATCH-DOOR-MAP CASE, 173
CATCH-PARKING BRAKE, 240,243
CATCH-REAR SEAT, 41
CELL INSTALLATION-FUEL, 3
CENTER LINE CAMERA FLOORBOARD, 339
CENTER LINE CAMERA PROVISIONS INSTALLATION, 337
CESSNA BATTERY, 301
CHAIN ASSEMBLY-AILERON CONTROL, 288
CHAIN-BAGGAGE DOOR STOP, 121
CHAIN-STABILIZER TRIM FORWARD, 299
CHANNEL-FUSELAGE SPLICE, 51
CHANNEL-UPHOLSTERY RETAINER, 105
CHARGE INDICATOR BULB, 155,170C
CHARGE INDICATOR LIGHT, 155,168,170C
CIGAR LIGHTER KNOB, 149,153,168,170C
CIGAR LIGHTER, 168,149,153,155,170C
CIRCUIT BREAKER BUSS STRIP, 149
CIRCUIT BREAKER COVER, 151
CIRCUIT BREAKER DECAL, 271
CIRCUIT BREAKER-OIL DILUTION, 273
CIRCUIT BREAKER, 149,153,155,157,168,170C,237
CLAMP & COUNTERWEIGHT ASSEMBLY-PROPELLER, 355
CLIP-DOOR HANDLE RETAINING, 106,111,115,115B
CLOCK, 162,165,169,170D
COAT HANGER HOOK, 123
COLLAR-ADJUSTABLE FRONT SEAT SCREW, 145F
COLLAR-CONTROL TUBE, 169,170D
COLLECTOR ASSEMBLY-ENGINE EXHAUST, 227,229
COLOR CHART, IV,V,VI,VII,VIII,IX,X,XI,XII
COMMAND CONTROL ASSEMBLY-TACTAIR, 313,315B
COMPASS CARD COVER, 160,163,169,170C
COMPASS CARD RETAINER, 160,163,169
COMPASS CARD, 160,163
COMPASS-GYRO, 162,165,170,170D,257,315B,319B
COMPASS, 160,175
CONNECTOR ASSEMBLY-PITOT TUBE, 254
CONTACTOR ASSEMBLY-MASTER SOLENOID, 301
CONTINENTAL ENGINE, 203,205,209,199,197
CONTROL ARM-GOVERNOR, 197
CONTROL ARM-PROPELLER, 199
CONTROL ASSEMBLY-PROPELLER, 197,199
CONTROL ASSEMBLY-THROTTLE, 198,201
CONTROL ASSEMBLY-WINTERIZATION, 221,225
CONTROL BALL JOINT-PROPELLER, 197
CONTROL CABLE-AILERON, 288
CONTROL CABLE-ELEVATOR, 291
CONTROL CABLE-ELEVATOR TRIM, 293
CONTROL CABLE-FLAP, 295
CONTROL CABLE-RUDDER, 282,285,287
CONTROL CABLE-STABILIZER TRIM, 299
CONTROL CHAIN-AILERON, 288
CONTROL INDICATOR-TRIM, 299
CONTROL LEVER-COWL FLAP, 251
CONTROL LOCK-MIXTURE, 149,153,155
CONTROL LOCK, 176
CONTROL OPENING COVER-RH, 153
CONTROL SYSTEM INSTALLATION-COWL FLAPS, 170A
CONTROL SYSTEM INSTALLATION-FUEL, STRAINER DRAIN VALVE, 277
CONTROL SYSTEM-AILERON, 288

ALPHABETICAL INDEX

C (cont)

CONTROL SYSTEM-ELEVATOR, 291
CONTROL SYSTEM-FLAP, 295
CONTROL SYSTEM-RUDDER, 282,285,287
CONTROL TEE ASSEMBLY, 280
CONTROL TEE INSTALLATION, 280
CONTROL TEE SUPPORT, 51,53,73
CONTROL TUBE BALL, 153,169,149,157,170D
CONTROL TUBE COLLAR, 169,170D
CONTROL TUBE-BALL & SOCKET, 149,153,157,169,170D
CONTROL TUBE, 280
CONTROL UNIT-TACTAIR, 317,319B
CONTROL WHEEL ASSEMBLY, 280
CONTROL WHEEL EMBLEM, 281
CONTROL-CABIN AIR, 149,153,155,168,170C
CONTROL-CABIN HEAT, 149,153,155,168,170C,233,234
CONTROL-CARBURETOR HEAT, 149,153,155,167,170A, 197,199
CONTROL-CARBURETOR MIXTURE, 149,153,155,168, 170C,198,201
CONTROL-COWL FLAP, 149,153,157,167,170A,198, 249,251
CONTROL-FORWARD AIR VENT, 231A
CONTROL-PARKING BRAKE, 149,153,239,241
CONTROL-PROPELLER PITCH, 149,153,155,168,170C
CONTROL-STRAINER DRAIN, 155,168,170C,277
CONTROL-TACTAIR COMMAND, 313,315B
CONTROL-THROTTLE, 149,153,155,168,170C
CONTROL-WINTERIZATION, 158,170
CONTROLS-DUAL, 245,280
COOLER-OIL, 207,211
CORRECTION CARD RETAINER, 170D
CORRECTION CARD, 169,170C
COUNTERWEIGHT-PROPELLER, 355
COURTESY LIGHT INSTALLATION, 301,309,310
COVER ASSEMBLY WINTERIZATION, 223
COVER ASSEMBLY-FRONT SEAT, 139,141,145B,145D
COVER ASSEMBLY-FUSELAGE TUNNEL AFT, 73
COVER ASSEMBLY-OBSERVATION WINDOW, 335
COVER ASSEMBLY-RADIO OPENING, 151
COVER ASSEMBLY-REAR SEAT, 147
COVER ASSEMBLY-SHOCK PANEL, 163
COVER ASSEMBLY-TRIM CONTROL WHEEL-STABILIZER, 299
COVER PLATE ASSEMBLY-SPEED FAIRING, 98,99
COVER PLATE-FUSELAGE TUNNEL FORWARD, 51,53
COVER PLATE-VIEW FINDER, 339
COVER-CAMERA WINDOW, 335
COVER-CARBURETOR AIR BOX, 221
COVER-CIRCUIT BREAKER, 151
COVER-COMPASS CARD, 160,163,169,170C
COVER-CONTROL OPENING RH, 153
COVER-COWL DECK, 122
COVER-FUSELAGE TUNNEL CENTER, 73
COVER-FUSELAGE TUNNEL FORWARD, 73
COVER-GOVERNOR, 343B
COVER-INSTRUMENT PANEL, 154
COVER-LEFT DOOR POST UPPER, 133
COVER-RUDDER TRIM SYSTEM, 288
COVER-RUDDER TRIM WHEEL, 130
COVER-SHOCK PANEL, 160,169,170C
COVER-STATIONARY PANEL, 155,167,170A
COVER-SWITCH PANEL, 151,154
COWL ACCESS DOOR, 180,182,185,188,191,193A
COWL ASSEMBLY-ENGINE, 179,180,183,187,191,192
COWL ASSEMBLY-LOWER, 179,180,183,187,191,192
COWL ASSEMBLY-UPPER, 179,180,183,191
COWL DECK COVER, 122
COWL DECK FAIRING, 123
COWL DOOR HINGE, 179,185,187,191,192,193A
COWL DOOR LATCH, 182,185,188,180,179
COWL FLAP BELLCRANK, 249
COWL FLAP CONTROL, 149,153,157,167,170A,198, 249,251

C (cont)

COWL FLAP HINGE, 180,182
COWL FLAP LEVER, 251
COWL FLAP, 180,182,185,191,193A
COWL FLAPS CONTROL INSTALLATION, 170A
COWL FLAPS CONTROL SYSTEM INSTALLATION, 249,251
COWL FLAPS PUSH-PULL ROD, 249
COWL NOSE CAP, 179,180,182,183,188,191,193A
CROSSARM-PARKING BRAKE, 239,241
CROSSWIND BRAKE CYLINDER HEAD, 351
CROSSWIND GEAR BRAKE ASSEMBLY, 351
CROSSWIND GEAR INSTALLATION, 92
CROSSWIND WHEEL AXLE BOOT, 349
CROSSWIND WHEEL KIT, 372
CROSSWIND WHEEL, 349
CUP-FUEL SAMPLER, 176
CUSHION ASSEMBLY-AUXILIARY SEAT, 148C
CUSHION ASSEMBLY-FRONT SEAT UPHOLSTERED, 139,141,145,145B,145D
CUSHION ASSEMBLY-REAR SEAT, 147
CUSHION ASSEMBLY-SEAT UPHOLSTERED-ADJUSTABLE SEAT, 145D
CUSHION ASSEMBLY-UPHOLSTERED TILTING FRONT SEAT, 145
CUSHION ASSEMBLY-UPHOLSTERED-RECLINING SEAT, 145B
CUTOUT SWITCH-STARTER, 171
CYLINDER & VALVE ASSEMBLY-OXYGEN, 333,333B
CYLINDER ASSEMBLY-BRAKE MASTER, 365
CYLINDER BODY-MASTER, 365
CYLINDER BRACKET-BRAKE, 245
CYLINDER HEAD TEMP. GAGE, 162,165,167,170A
CYLINDER HEAD TEMP. GAGE LEAD, 162,165,167,170A
CYLINDER HEAD-BRAKE-CROSSWIND, 351

D

DAMPENER ARM-SHIMMY, 98A,97
DAMPENER-SHIMMY, 97,98A,348
DECAL-BAGGAGE LOADING, 271
DECAL-CIRCUIT BREAKER, 271
DECAL-PROP INSTALLATION INSTRUCTIONS, 363
DECAL-TRANSFER SWITCH, 271
DECALS, PLACARDS & EXTERIOR MARKINGS,341,343
DECK COVER-COWL, 122
DEFLECTOR ASSEMBLY-AIR OUTLET, 235
DEFLECTOR-EXHAUST HEAT, 204,207,211
DEFLECTOR-GAS-CENTER LINE CAMERA, 338
DEFROSTER NOZZLE, 233
DEFROSTER OUTLET, 233
DEFROSTER VALVE GUIDE, 233
DEFROSTER VALVE, 233
DETECTOR-NAVIGATION LIGHT, 4,4C,301
DILUTION SYSTEM-OIL, 273
DIODE ASSEMBLY-MASTER SOLENOID, 301
DIRECTIONAL GYRO, 162,165,170,170D,257,260 ,263,313,315B,319B
DISC DRIVE KEY, 345
DISTRIBUTOR-FUEL, 279
DOME ASSEMBLY-ROTATING BEACON, 307
DOME LIGHT, 309
DOME-PROPELLER SPINNER, 195
DOOR ASSEMBLY-AIR VENT, 53,58
DOOR ASSEMBLY-BAGGAGE, 121
DOOR ASSEMBLY-COWL ACCESS, 180,182,185, 188,191,193A
DOOR ASSEMBLY-FUEL, 15
DOOR ASSEMBLY-GLOVE BOX, 151,154,173
DOOR ASSEMBLY-MAP CASE, 173

ALPHABETICAL INDEX

D (cont)

DOOR ASSEMBLY-OIL FILTER, 179,180,183,187,191,192
DOOR CATCH-MAP CASE, 173
DOOR GUSSET, 41,45
DOOR HANDLE ESCUTCHEON, 105,109,111,115,115B
DOOR HANDLE SHAFT, 105,107,111
DOOR HANDLE SPRING, 105,109,111,115,115B
DOOR HANDLE-BAGGAGE, 131
DOOR HANDLE, 105,109,111,115,115B,118
DOOR HINGE FAIRING, 105,109
DOOR HINGE-CABIN, 105,107,111,113
DOOR HINGE-COWL, 179,185,187,191,192,193A
DOOR HINGE-FUEL, 15
DOOR INSTALLATION-BAGGAGE, 37,39,121
DOOR INSTALLATION-CABIN, 105,107,111,113,115B
DOOR WINDOW LATCH, 106,112
DOOR LATCH BOLT, 118
DOOR LATCH-BAGGAGE, 121
DOOR LATCH-CABIN, 105,107,113,115B,116,117,118
DOOR LATCH-COWL, 182,185,188,180,179
DOOR LATCH, 117,118
DOOR LOCK CAM-BAGGAGE, 121
DOOR LOCK-BAGGAGE, 121
DOOR LOCK-CABIN, 105,107
DOOR POST ASSEMBLY-FUSELAGE LH, 59
DOOR POST COVER, 133
DOOR POST FAIRING, 135
DOOR POST SHIELD, 134
DOOR PULL ASSEMBLY, 127
DOOR STOP CHAIN-BAGGAGE, 121
DOOR STOP HINGE, 105,111
DOOR STOP, 105,107,111,113,115B
DOOR WINDOW HINGE, 106,112,115
DOOR WINDOWS, 106,109,112,113
DOOR-GLOVE-BOX, 157
DOORPOST ASSEMBLY-FUSELAGE RH, 59
DOORPOST BULKHEAD-FRONT, 56,63
DOORSTOP SPRING, 105,107,111,115B
DORSAL FITTINGS, 82
DORSAL INSTALLATION, 24
DRAIN ADAPTER, 15,17
DRAIN CONTROL-STRAINER, 155,168,170C,277
DRAIN INSTALLATION-FUEL TANK FILLER NECK WELL, 327
DRAIN SCOOP, 42
DRAIN VALVE CONTROL, 277
DRAIN VALVE PAWL, 277
DRAIN VALVE PLACARD, 341,343
DRAIN VALVE-OIL, 203,205,209
DRAIN VALVE, 269,276,277
DRIP PIPE-HEATER, 371
DUAL BRAKE HUB, 246
DUAL CONTROLS KIT, 372
DUAL CONTROLS, 245,280
DUCT ASSEMBLY-CABIN HEATER, 233
DUCT ASSEMBLY-CARBURETOR AIR INTAKE, 191,193A

E

ELBOW ASSEMBLY-CABIN VENTILATION, 231
ELECTRICAL EQUIPMENT INSTALLATION, 301
ELEMENT-REPLACEMENT-FULL FLOW OIL, 275
ELEVATOR AMPLIFIER-TACTAIR, 315D
ELEVATOR ASSEMBLY, 35
ELEVATOR BALANCE WEIGHT, 35
ELEVATOR BELLCRANK BRACKET, 59
ELEVATOR BELLCRANK-FORWARD, 291
ELEVATOR BELLCRANK-REAR, 291
ELEVATOR CONTROL CABLE, 291
ELEVATOR CONTROL LINK, 291
ELEVATOR CONTROL SYSTEM INSTALLATION, 291

E (cont)

ELEVATOR HINGE, 35
ELEVATOR INSTALLATION, 35
ELEVATOR PYLON, 35
ELEVATOR SERVO, 315,315D
ELEVATOR STOPS-UPPER & LOWER, 85,87
ELEVATOR TIP, 35
ELEVATOR TORQUE TUBE, 35
ELEVATOR TRIM CABLE, 293
EMBLEM-SCOTCHCAL-CONTROL WHEEL, 281
ENGINE ASSEMBLY-CONTINENTAL, 203,205,209,199,197
ENGINE BAFFLE, 203
ENGINE BAFFLES INSTL, 209,214,217,219
ENGINE BONDING STRAP, 203,205,209
ENGINE COWL, 179,180,183,187,191,192
ENGINE DRIVEN VACUUM SYSTEM INSTALLATION, 255,257
ENGINE EXHAUST COLLECTOR, 227,229
ENGINE INSTALLATION, 197,199
ENGINE MOUNT BUSHING, 197,199
ENGINE MOUNT PAD, 197,199
ENGINE MOUNT, 203,205,209,330
ENGINE OIL PLACARD, 151,154,157,341,343
ENGINE PRIMER, 149,153,155,167,170A,266,268
ENGINE SHOCK MOUNT, 203,205,209
EQUIPMENT INSTALLATION-STATIONARY INSTR PANEL, 149,153,167,170A
EQUIPMENT INSTALLATION-FUSELAGE, 175
ESCUTCHEON-DOOR HANDLE, 105,109,111,115,115B
EXCHANGER ASSEMBLY, 369
EXHAUST COLLECTOR-ENGINE, 227,229
EXHAUST MUFFLER, 226,229
EXHAUST STACK INSTALLATION, 205,229
EXHAUST STACKS, 203,209,226,229
EXPANDER ASSEMBLY-TIRE, 176
EXPANDER BOOT, 191,193A
EXPANDER-AIR INTAKE, 191,193A
EXTENDED RANGE WING, 4A
EXTERIOR MARKINGS, 341,343
EXTERNAL POWER RECEPTACLE, 301,303,303B
EXTINGUISHER-FIRE, 175
EYEBOLT-AMPHIBIAN, 330
EYEBOLT-FLOATPLANE, 327
EYEBOLT-HOISTING, 175
EYEBOLT-TIE DOWN, 175

F

FACEPLATE & BRAKET ASSEMBLY-NAVOMATIC, 171
FAIRING ASSEMBLY-MAIN GEAR, 92,95
FAIRING ASSEMBLY-STABILIZER, 29
FAIRING ASSEMBLY-TAILWHEEL, 353
FAIRING ASSEMBLY-WING, 3,4A
FAIRING-COWL DECK, 123
FAIRING-DOOR UPPER HINGE, 105,109
FAIRING-NAVIGATION LIGHT, 4
FAIRING-REAR DOOR POST, 135
FAIRING-STA 90 BULKHEAD, 135
FAIRING-TAILWHEEL STEERING CABLE, 82
FAIRING-WHEEL INNER, 91
FAIRING-WINDOW, 49
FIBERGLASS-SOUNDPROOFING,123
FILL INSTRUCTIONS-AUXILIARY FUEL, 271
FILLER ASSEMBLY-BAGGAGE COMPARTMENT, 129
FILLER NECK ASSEMBLY, 15
FILLER NECK DRAIN-FUEL TANK, 327
FILLER NECK-AUXILIARY FUEL TANK, 269
FILLER VALVE ASSEMBLY-OXYGEN, 333B
FILLERNECK ADAPTER, 15
FILLET-WING, 37,39

ALPHABETICAL INDEX

F (cont)

FILTER & BRACKET ASSEMBLY-FULL FLOW, 275
FILTER ASSEMBLY-CARBURETOR, 192,193A,211
FILTER ASSEMBLY-OIL, 273
FILTER ELEMENT-OIL, 275
FILTER-AIR BOX, 203,207
FILTER-FULL FLOW OIL, 275
FILTER-MAGNETO, 212
FILTER-OIL, 273
FIN & DORSAL INSTALLATION, 24
FIN & DORSAL INSTALLATION-SWEPT, 26
FIN ASSEMBLY, 24,26
FIN HINGE-VERTICAL, 25
FIN TIP-ROTATING BEACON, 307
FIN TIP, 25
FINISH & TRIM PLACARD, 341,343
FIRE EXTINGUISHER, 175
FIREWALL ASSEMBLY, 51,53,55,56,74,75
FIREWALL GROMMETS, 77,77B
FITTING-NOSE GEAR, 55,58
FITTING-TAILCONE REINFORCEMENT, 85
FITTING-TAILWHEEL STEERING, 103,282
FITTINGS-AMPHIBIAN, 329
FITTINGS-FLOATPLANE, 323,325
FIVE LINE PRIMER SYSTEM, 211
FLANGE-PITOT STATIC LINE, 51,53,55,56
FLAP ASSEMBLY-COWL, 180,182,185,191,193A
FLAP ASSEMBLY-WING, 21
FLAP BELLCRANK, 21,296
FLAP CONTROL CABLE, 295
FLAP CONTROL SYSTEM INSTALLATION, 295
FLAP CONTROL-COWL, 149,153,157,167,170A, 198,249,251
FLAP HINGE-COWL, 180,182
FLAP INSTALLATION, 3,4A,21
FLAP INSTRUCTIONS PLACARD, 341,343
FLAP LEVER CAM, 296
FLAP LEVER LATCH, 296
FLAP LEVER RATCHET, 296
FLAP LEVER ROD, 296
FLAP LEVER-COWL, 251
FLAP LEVER, 296
FLAP PUSH-PULL ROD, 21,296
FLAP SPAR, 21
FLARE SWITCH, 305
FLARE-1-1/2 MINUTE PARACHUTE, 305
FLARES INSTALLATION, 305
FLARES KIT-3 1-1/2 MINUTE, 372
FLASHER ASSEMBLY NAVIGATION LIGHTS, 301
FLOATPLANE FITTINGS INSTALLATION EDO 249-2870, 325
FLOATPLANE FITTINGS INSTALLATION-EDO NO. 44-2425, 323
FLOATPLANE SEAL, 324
FLOATPLANE STRUT BLOCK, 323,325,329
FLOATPLANE/AND OR AMPHIBIAN KIT, 372
FLOOD LIGHT-INSTRUMENT, 309
FLOOR ASSEMBLY-AUXILIARY FUEL SYSTEM, 269
FLOOR COVERING, 131
FLOORBOARD ASSEMBLY-CENTER LINE CAMERA, 339
FLOORBOARD ASSEMBLY-FUSELAGE FRONT SECTION, 51,53,55,56
FLOORBOARD-FUSELAGE CENTER, 39
FLOORBOARD-LANDING GEAR SUPPORT, 59
FORK & BARREL ASSEMBLY-NOSE GEAR, 101,102A
FORK & BRACKET ASSEMBLY-TAIL WHEEL, 353
FORK-NOSE GEAR REPLACEMENT KIT, 101,102A
FORWARD SPAR-FUSELAGE, 59,63
FRAME ASSEMBLY-SEAT LH, 145F
FRAME ASSEMBLY-WINDOW-DOOR, 106
FRAME-DOOR, 41,45
FRAME-HEADREST, 143,145,145C
FRAME-WINDOW, 47
FRONT & CENTER SECTION-FUSELAGE, 37,39,41,45
FRONT DOORPOST BULKHEAD, 56,63

F (cont)

FRONT SEAT ACTUATOR, 145
FRONT SEAT BACK, 139,141
FRONT SEAT CUSHION, 139,141,145,145B,145D
FRONT SEAT HANDLE, 139,145C,145F
FRONT SEAT-ADJUSTABLE, 145D
FRONT SEAT, 139,141
FRONT SECTION-FUSELAGE, 45,51,53,55
FUEL CAP & ADAPTER, 16,17
FUEL CAP HANDLE, 17B
FUEL CAP-AUXILIARY TANK, 269
FUEL CAP, 15,17B
FUEL CELL VENT TUBE, 265,266D
FUEL CELL VENT, 41
FUEL CELL, 15,17
FUEL CONTROL VALVE-HEATER, 369
FUEL DISTRIBUTOR, 279
FUEL DOOR HINGE, 15
FUEL DOOR, 15
FUEL DRAIN PLUG, 17,15
FUEL FILLER NECK-AUXILIARY, 269
FUEL FILLER NECK, 15
FUEL GAGE UNIT-TANK, 16
FUEL GAGE-AUXILIARY, 165,167,170A,271
FUEL GAGE, 15,163,167,170A
FUEL JET, 278
FUEL LINE, 265,266A
FUEL NECK, 15
FUEL PLACARD-AUXILIARY, 158
FUEL PRIMER FIVE LINE SYSTEM INSTALLATION, 211
FUEL PRIMER SIX LINE SYSTEM INSTALLATION, 204,207,211,278
FUEL SAMPLER CUP, 176
FUEL SELECTION PLACARD, 341,343
FUEL SELECTOR GUIDE SHAFT, 265
FUEL SELECTOR SHAFT, 265,266D
FUEL SELECTOR VALVE ADAPTER, 265,266C,268
FUEL SELECTOR VALVE, 265,266A,266D,366
FUEL SELECTOR VALVE HANDLE, 265,266,266D
FUEL STRAINER BODY, 276
FUEL STRAINER BOWL, 276
FUEL STRAINER SCREEN, 276
FUEL STRAINER, 266,266C,268,276
FUEL SYSTEM INSTALLATION, 265,266A,266D
FUEL SYSTEM-AUXILIARY, 269
FUEL TANK DRAIN ADAPTER, 15,17
FUEL TANK FILLER NECK DRAIN, 327
FUEL TANK GAGE UNIT, 16
FUEL TANK STRAINER, 15,17
FUEL TANK-EXTENDED RANGE, 17
FUEL TANK, 15
FUEL VENT VALVE, 15,17
FUEL WELL ADAPTER, 15
FULL FLOW FILTER, 275
FULL FLOW OIL FILTER INSTALLATION, 275
FUSE HOLDER, 302
FUSELAGE AFT SECTION, 37,39,81
FUSELAGE ASSEMBLY, 37,39
FUSELAGE BAGGAGE DOOR, 121
FUSELAGE BULKHEAD INSTALLATION STA 65.33, 69
FUSELAGE EQUIPMENT INSTALLATION, 175
FUSELAGE FRONT SECTION, 45,51,53,55

G

GAGE BEZEL-OXYGEN, 333
GAGE CYLINDER HEAD TEMP, 162,165,167,170A
GAGE UNIT-FUEL TANK, 16
GAGE-AUXILIARY FUEL, 165,167,170A,271
GAGE-CARBURETOR AIR TEMPERATURE, 162,165, 167,170A,204,207,211

ALPHABETICAL INDEX

G (cont)

GAGE-FUEL, 15,163,167,170A
GAGE-MANIFOLD PRESSURE, 160,163,165,167,170A
GAGE-OIL PRESSURE, 161,163,167,170A,273
GAGE-OIL TEMPERATURE, 161,163,167,170A,273
GAGE-OUTSIDE AIR TEMP, 175
GAGE-OXYGEN PRESSURE, 333
GAGE-SUCTION, 158,162,167,170A,255,257,261, 313,315C,317,319B
GAS CAP & ADAPTER, 16,17
GAS CAP HANDLE, 17B
GAS CAP-AUXILIARY TANK, 269
GAS CAP, 15,17B
GAS GAGE-AUXILIARY, 165,167,170A,271
GAS GAGE, 15,163,167,170A
GAS LINE, 265
GAS TANK GAGE UNIT, 16
GASKET-CARBURETOR AIRBOX, 211
GASKET-OIL PLUG, 203,205,209
GASKET-OIL VALVE, 203,205,209
GEAR AXLE-LANDING, 91,93
GEAR-CROSSWIND LANDING, 92
GEAR-MAIN LANDING, 91,93
GENERATOR BLAST TUBE, 204,207,211
GENERATOR KIT-50 AMP, 372
GENERATOR-35 AMP, 301
GENERATOR-50 AMP, 301
GLASS ASSEMBLY-WINDOW, 106,109,112,115,115B
GLOVE BOX & MAP CASE ASSEMBLIES & INSTALLATIONS, 173
GLOVE BOX DOOR CATCH, 151,154,155,173
GLOVE BOX DOOR KNOB, 151,157
GLOVE BOX DOOR, 151,154,157,173
GLOVE BOX HINGE, 157,173
GLOVE BOX INSTALLATION, 170,171
GLOVE BOX, 149,154,155,173
GOVERNOR ASSEMBLY-PROPELLER, 203,205,209,343B
GOVERNOR BODY, 343B
GOVERNOR CONTROL ARM, 197
GOVERNOR COVER, 343B
GOVERNOR LEVER, 343B
GOVERNOR RELIEF VALVE, 343C
GROMMETS INSTALLATION-FIREWALL, 77,77B
GROUND CABLE-BATTERY, 301
GROUND SERVICE PLUG INSTALLATION, 301,303,303B
GROUND SERVICE PLUG CABLE, 303
GROUND SERVICE PLUG KIT-FRONT MOUNTED, 373
GROUND SERVICE PLUG KIT-AFT MOUNTED, 373
GROUND STRAP-ENGINE MOUNT, 197,199
GROUND STRAP, 160,163,168,170C
GUIDE-DEFROSTER VALVE, 233
GUIDE-SHAFT-FUEL SELECTOR, 265
GUIDE-STABLIZER SEAL, 82
GUSSET PLATE-DOOR REAR JAMB, 41,45
GUSSET-BAGGAGE DOOR, 46
GYRO COMPASS, 260,263,313
GYRO COVER PANEL, 255
GYRO DIRECTIONAL, 162,165,170,170D,257,315B,319B
GYRO-HORIZON, 165,170,171,257,260,263,313, 315B,317,319B
GYROS KIT-REMANUFACTURED TO PICTORIAL, 373

H

HANDLE ASSEMBLY-ADJUSTABLE FRONT SEAT, 139,145C,145F
HANDLE ASSEMBLY-FUEL SELECTOR, 265,266A,266D
HANDLE ASSEMBLY-PARKING BRAKE, 239,241
HANDLE-ASSIST, 122
HANDLE-BAGGAGE DOOR PULL, 131

H (cont)

HANDLE-DOOR, 105,109,111,115,115B,118
HANDLE-FUEL SELECTOR, 265,266,266D
HANDLE-GAS CAP, 17B
HANDLE-LATCH, 119,145
HANDLE-SEAT LATCH, 145B
HANGER HOOK-COAT, 123
HANGER-UPHOLSTERY, 47
HARNESS HOOK-SHOULDER, 175
HARNESS-SHOULDER, 175
HARTZELL PROPELLER, 195,355
HEAD PHONE JACK, 149
HEAD TEMP. GAGE-CYLINDER, 162,165,167,170A
HEADLINER ASSEMBLY-CABIN TOP, 123
HEADLINER RETAINER, 42,45
HEADREST ASSEMBLY, 143,145,145C,148
HEADREST FRAME, 143,145,145C
HEADREST KIT-FRONT SEAT, 373
HEADREST KIT-REAR SEAT, 373
HEADREST RETAINER, 143,145,145C,148
HEADSET-SPEAKER-MICROPHONE INSTALLATION, 309,310
HEAT CONTROL-CABIN, 149,153,155,168,170C,233,234
HEAT CONTROL-CARBURETOR, 149,153,155,167, 170A,197,199
HEATED PITOT, 254
HEATER ASSEMBLY-PITOT, 254
HEATER ASSEMBLY-STEWART WARNER, 235
HEATER BLOWER, 235
HEATER DRIP PIPE, 371
HEATER DUCT, 233
HEATER INSTALLATION-CABIN, 233
HEATER KIT-STEWART WARNER, 373
HEATER MOTOR, 369
HEATER STAND PIPE, 371
HEATER SWITCH, 151,237
HEATER VALVE SHAFT, 233
HEATER-MODEL 979-B-1, 369
HEATER-STEWART WARNER, 235
HEAVY DUTY-LANDING GEAR SPRING, 91
HINGE ASSEMBLY-ACTUATOR, 367
HINGE ASSEMBLY-COWL DOOR, 179,185, 187,191,192,193A
HINGE ASSEMBLY-COWL FLAP, 180,182
HINGE ASSEMBLY-FIN, 25
HINGE ASSEMBLY-FUEL DOOR, 15
HINGE ASSEMBLY-GLOVE BOX, 157,173
HINGE ASSEMBLY-LOWER-DOOR, 107
HINGE ASSEMBLY-MAP CASE, 173
HINGE ASSEMBLY-STABILIZER, 29
HINGE ASSEMBLY-UPPER CABIN DOOR, 105
HINGE ASSEMBLY-WINDOW-DOOR, 106,112,115
HINGE-AILERON, 18
HINGE-BAGGAGE DOOR, 121
HINGE-COWL DOOR, 191,192
HINGE-DOOR STOP, 105,111
HINGE-ELEVATOR, 35
HOISTING PROVISIONS KIT, 373
HOISTING RINGS, 175
HOLD-ALTITUDE, 315B
HOLDER-FUSE, 302
HOOK-COAT HANGER, 123
HOOK-SHOULDER HARNESS, 175
HORIZONTAL GYRO, 165,170,171,257, 260,263,313,315B,317,319B
HORN-STALL WARNING INDICATOR, 154,157,173A
HOSE-DISCHARGE-VACUUM, 255
HOSE-VENT, 255
HOUSING-BRAKE, 345
HOUSING-DOOR LATCH, 116
HOW TO ORDER PARTS, II
HOW TO READ FINISH & TRIM PLATE, IV
HOW TO USE CATALOG, I,II,III
HUB AND AXLE ASSEMBLY-CROSSWIND WHEEL, 349

ALPHABETICAL INDEX

H (cont)

HUB ASSEMBLY-PROPELLER, 359,363
HUB ASSEMBLY-SPIDER-PROPELLER, 355
HUB CAP, 92A,95
HUB-DUAL BRAKE, 246

I

IGNITER ASSEMBLY, 369
IGNITION SWITCH, 149,153,155,168,170C
INDEX-NUMERICAL, 375
INDICATOR ASSEMBLY-TRIM CONTROL, 299
INDICATOR BULB-CHARGE, 155,170C
INDICATOR-AIR SPEED, 160,163,169,170D,253
INDICATOR-AIRSPEED-AMPHIBIAN, 160,163,169
INDICATOR-DIRECTIONAL GYRO-AXIMUTH-TYPE 34B, 170D
INDICATOR-POINTER-STABILIZER TRIM, 299
INDICATOR-STALL WARNING, 149
INDICATOR-TURN & BANK, 162,165,169,170D
INDICATOR-VERTICAL SPEED, 162,165,169,170D,253
INITIALS, 167
INLET ASSEMBLY-AIR VENT, 53,58,231
INNER TUBES, 346
INSIGNIA-CESSNA, 160
INSTALLATION KIT-AUXILIARY FUEL SYSTEM, 269
INSTALLATION-HEATED PITOT, 254
INSTALLATION-OIL FILTER, 273
INSTALLATION-PORTABLE STRETCHER, 175
INSTALLATION-SELECTOR VALVE-VACUUM, 255,260
INSTRUCTION PLATE-FILL-AUXILIARY FUEL, 271
INSTRUCTIONS-HOW TO ORDER PARTS, II
INSTRUCTIONS-HOW TO READ FINISH & TRIM PLATE, IV
INSTRUCTIONS-HOW TO USE CATALOG, I,II,III
INSTRUMENT FLOOD LIGHT, 309
INSTRUMENT PANEL BRACE, 51,53,56,58
INSTRUMENT PANEL COVER, 154
INSTRUMENT PANEL-SHOCK MOUNTED, 160,163,168,170C
INSTRUMENTS, SEE INDIVIDUAL LISTINGS

J

JACK POINT-UNIVERSAL, 175
JACK-HEAD PHONE, 149
JACK-MICROPHONE, 167,170A
JAMB-BAGGAGE DOOR LOWER-FLOATPLANE, 325
JAMB-BAGGAGE DOOR, 42,46
JET-FUEL, 278

K

KEY-DISC DRIVE, 345
KICK PLATE, 129
KICK PLATE, 130
KIT-STARTER SWITCH & LOCK, 170A
KITS, ACCESSORY LIST OF, 372,373,374,374A,374B
KNOB-ASH RECEIVER, 153,155
KNOB-CIGAR LIGHTER, 149,153,168,170C
KNOB-GLOVE BOX DOOR, 151,157
KNOB-ROTATING BEACON SWITCH, 168
KNOB-SEAT HANDLE, 141
KNOB-THUMB LATCH-DOOR, 112

L

LAMP-STALL WARNING INDICATOR, 149
LAMP-TAIL LIGHT, 89
LANDING GEAR AXLE, 91,93
LANDING GEAR BULKHEAD, 53,59
LANDING GEAR FAIRING, 92,95
LANDING GEAR INSTALLATION-MAIN, 91,93
LANDING GEAR SHIMS, 91,93
LANDING GEAR SPRING, 91,93
LANDING GEAR TORQUE LINK, 101,102,102A
LANDING GEAR-CROSSWIND, 92
LANDING LIGHT SWITCH, 149,153,155
LANDING LIGHT WINDOW, 4,4A
LANDING LIGHT, 4,4A
LARGE OIL COOLER INSTALLATION, 204,207,211
LATCH ARM-SEAT BACK, 147
LATCH ASSEMBLY-BAGGAGE DOOR, 121
LATCH ASSEMBLY-FLAP LEVER, 296
LATCH ASSEMBLY-THUMB-DOOR, 112
LATCH BOLT-DOOR, 118
LATCH HANDLE, 119,145
LATCH HOUSING-DOOR, 116
LATCH INSTALLATION-CABIN DOOR REMOVABLE, 118
LATCH INSTALLATION-DOOR, 117
LATCH PULL BAR-BAGGAGE DOOR, 121
LATCH-CABIN DOOR, 105,107,113,115B,116,117,118
LATCH-COWL DOOR, 182,185,188,180,179
LATCH-REAR SEAT, 147,148C
LATCH-WINDOW-DOOR, 106,112
LEAD-CYLINDER HEAD TEMPERATURE GAGE, 162,165,167,170A
LEADING EDGE ASSEMBLIES-EXTENDED RANGE WING, 9B
LEADING EDGE ASSEMBLY-WING, 5,7B,7D,9
LENS ASSEMBLY-ROTATING BEACON, 307
LENS-CLEAR-TAIL LIGHT, 89
LENS-NAVIGATION LIGHT, 4,4C
LEVER ASSEMBLY-COWL FLAP CONTROL, 251
LEVER ASSEMBLY-FLAP, 296
LEVER ASSEMBLY-SPEED ADJUSTMENT-GOVERNOR, 343B
LEVER CAM-FLAP, 296
LEVER LATCH-FLAP, 296
LEVER RATCHET-FLAP, 296
LIGHT ASSEMBLY-CHARGE INDICATOR, 155,168,170C
LIGHT ASSEMBLY-DOME, 309
LIGHT ASSEMBLY-INSTRUMENT PANEL FLOOD, 309
LIGHT ASSEMBLY-TAIL, 89
LIGHT BULB-NAVIGATION, 4,4C
LIGHT BULB-VACUUM WARNING, 171
LIGHT BULBS, SEE INDIVIDUAL INSTALLATIONS
LIGHT INSTALLATION-CABIN & COURTESY, 301,309
LIGHT-CHARGE INDICATOR, 155,170C
LIGHT-COURTESY, 310
LIGHT-LANDING, 4,4A
LIGHTER KNOB-CIGAR, 149,153,168,170C
LIGHTER-CIGAR, 168,149,153,155,170C
LINE ASSEMBLY-FUEL, 266A
LINE ASSEMBLY-OXYGEN, 333B
LINE ASSEMBLY-STATIC SOURCE, 253
LINE ASSEMBLY-VENT-EXTENDED RANGE, 17
LINE-BRAKE, 91,92,92A,93,239,241
LINE-FUEL, 265
LINE-MANIFOLD PRESSURE, 167,170A,198,201
LINE-MANIFOLD PRESSURE GAGE, 160,163
LINE-PITOT, 7
LINE-PRIMER, 197,199,266,268
LINE-VENT, 266D
LINING-BRAKE STATIONARY-CROSSWIND, 351
LINK ASSEMBLY-LANDING GEAR TORQUE UPPER, 101,102,102A
LINK-ELEVATOR CONTROL, 291
LINKAGE BOOT-STEERING, 56
LINKAGE SPRING-PARKING BRAKE, 239,241
LOADING DECAL-BAGGAGE, 271

ALPHABETICAL INDEX

L (cont)

LOCK ASSEMBLY-BAGGAGE DOOR, 121
LOCK ASSEMBLY-DOOR, 105,107
LOCK CAM-BAGGAGE DOOR, 121
LOCK-CONTROL, 176
LOCK-MIXTURE CONTROL, 149,153,155
LONG RANGE WING, 4A
LOWER COWL, 179,180,183,187,191,192
LOWER SHOCK STRUT, 101
LUG-CARGO TIE DOWN, 175

M

M.A.A. NAMEPLATE, 37,39,341,343
MACHINING ASSEMBLY-CONTROL TEE, 280
MAGNETO FILTER, 212
MAIN GEAR FAIRING, 92,95
MAIN LANDING GEAR, 91,93
MANIFOLD ASSEMBLY-OXYGEN, 333
MANIFOLD HEATER INSTALLATION, 233
MANIFOLD PRESSURE GAGE, 160,163,165,167,170A
MANIFOLD PRESSURE LINE, 167,170A,198,201
MAP CASE DOOR CATCH, 173
MAP CASE DOOR, 173
MAP CASE HINGE, 173
MAP CASE INSTALLATION, 170,171
MAP CASE, 173
MAP LIGHT PLACARD, 341,343
MAP SPOTLIGHT, 309
MASK ASSEMBLY-OXYGEN, 333,333B
MASK CASE-OXYGEN, 333
MASTER BRAKE CYLINDER INSTALLATION, 240,243,245
MASTER CYLINDER BODY, 365
MASTER CYLINDER PISTON, 365
MASTER CYLINDER-BRAKE, 365
MASTER SOLENOID CONTACTOR, 301
MASTER SOLENOID DIODE, 301
MASTER SWITCH, 149,153,155,168,170C
MCCAULEY PROPELLER, 195,359
MEDALLION-CESSNA ANNIVERSARY MODEL, 173
MEDALLION-WHEEL, 281
METERING PIN-NOSE GEAR, 101,102A
MICROPHONE JACK, 167,170A
MICROPHONE, 309,310
MIXTURE CONTROL LOCK, 149,153,155
MIXTURE CONTROL-CARBURETOR, 149,153, 155,168,170C,198,201
MOORING RING, 23,56,58,175
MOTOR ASSEMBLY-HEATER, 369
MOUNT BUSHING-ENGINE, 197,199
MOUNT PAD-ENGINE, 197,199
MOUNT-ENGINE-AMPHIBIAN, 330
MOUNT-ENGINE, 203,205,209
MOUNT-SHOCK, 160,163,168,170C
MOUNTING BRACKET-GROUND SERVICE PLUG, 303
MUD SCRAPER, 92,95,98,99
MUFFLER-EXHAUST, 226,229

N

NAMEPLATE CESSNA 182, 341
NAMEPLATE CESSNA 180, 343
NAMEPLATE SKYLANE, 341
NAMEPLATE-M.A.A., 37,39,341,343
NAMEPLATES, PLACARDS, STENCILS & EXTERIOR MARKINGS, 341,343
NAVIGATION LIGHT BULB, 4,4C
NAVIGATION LIGHT DETECTOR, 4,4C,301

N (cont)

NAVIGATION LIGHT FAIRING, 4
NAVIGATION LIGHT FLASHER, 301
NAVIGATION LIGHT FLASHER KIT, 373
NAVIGATION LIGHT LENS, 4,4C
NAVIGATION LIGHT SHIELD, 4C
NAVOMATIC FACEPLATE, 171
NECK-FUEL, 15
NOSE CAP ASSEMBLY-UPPER COWL, 179,180,183,187,191,192
NOSE CAP-LOWER COWL, 180,182,183,188,191,193A
NOSE GEAR FITTING, 55,58
NOSE GEAR FORK & BARREL, 101,102A
NOSE GEAR INSTALLATION, 97,98A
NOSE GEAR METERING PIN, 101,102A
NOSE GEAR SHOCK STRUT, 98A,101,102A
NOSE GEAR SPEED FAIRING, 97,98A
NOSE GEAR STEERING TUBE, 97,98A
NOSE GEAR STRUT, 97,98A
NOSE GEAR WHEEL, 97,98A,346,347A
NOSE WHEEL STEERING ROD BOOT, 55
NOSECAP ADAPTER RING, 179
NOZZLE ASSEMBLY-DEFROSTER, 233
NUMERICAL INDEX, 375
NUT-AXLE, 95

O

OBSERVATION WINDOW COVER, 335
OFF CENTER CAMERA PROVISIONS INSTALLATION, 335
OIL COOLER KIT-LARGE, 373
OIL COOLER-LARGE, 204,207,211
OIL COOLER-SMALL, 207,211
OIL DILUTION INSTALLATION, 273
OIL DILUTION PLACARD, 170C,341,343
OIL DILUTION SYSTEM KIT, 373
OIL FILTER DOOR, 179,180,183,187,191,192
OIL FILTER ELEMENT, 275
OIL FILTER KIT-WINSLOW, 373
OIL FILTER-FULL FLOW, 275
OIL FILTER, 273,275
OIL PLACARD, 151,154,157,341,343
OIL PLUG GASKET, 203,205,209
OIL PRESSURE GAGE, 161,163,167,170A,273
OIL PRESSURE TRANSMITTER, 207,212
OIL SEPARATOR, 255,257,261
OIL SYSTEM INSTALLATION, 273
OIL TEMPERATURE ADAPTER, 201
OIL TEMPERATURE GAGE, 161,163,167,170A,273
OIL TEMPERATURE LEAD ADAPTER, 198
OIL VALVE GASKET, 203,205,209
OIL VALVE PLUG, 203,205,209
OPERATIONAL LIMITATIONS PLACARD, 133,154,341,343
OPTIONAL ACCESSORY KITS, 372,373,374,374A,374B
ORIFICE-PISTON SUPPORT ASSEMBLY, 101,102A
OUTLET ASSEMBLY-CABIN VENT, 231
OUTLET-DEFROSTER, 233
OUTSIDE AIR TEMP. GAGE, 175
OUTSIDE AIR VENT INSTALLATION-FORWARD, 231
OXYGEN CYLINDER & VALVE, 333,333B
OXYGEN FILLER VALVE, 333
OXYGEN GAGE BEZEL, 333
OXYGEN LINE, 333B
OXYGEN MANIFOLD, 333
OXYGEN MASK CASE, 333
OXYGEN MASK, 333,333B
OXYGEN PRESSURE GAGE, 333
OXYGEN REGULATOR, 333
OXYGEN SYSTEM ASSEMBLY-AUTOMATIC, 333B
OXYGEN SYSTEM INSTALLATION, 333,333B
OXYGEN SYSTEM KIT, 373

ALPHABETICAL INDEX

P

PAD-ENGINE MOUNT, 197,199
PAD-WINDSHIELD, 71
PAINT, IV,V,VI,VII,VIII,IX,X,XI,XII
PAN-TAIL LIGHT, 89
PANEL ASSEMBLY & INSTALLATION-SHOCK MOUNTED INSTRUMENT, 160,163,168,170C
PANEL ASSEMBLY-AFT-UPHOLSTERY, 134
PANEL ASSEMBLY-BAGGAGE DOOR, 129
PANEL ASSEMBLY-BAGGAGE COMPARTMENT SIDE, 129
PANEL ASSEMBLY-BAGGAGE COMPARTMENT REAR, 129
PANEL ASSEMBLY-CABIN REAR UPPER SOUNDPROOF, 123
PANEL ASSEMBLY-CABIN TOP SOUNDPROOF, 123
PANEL ASSEMBLY-FIREWALL UPHOLSTERY, 122
PANEL ASSEMBLY-SIDEWALL FRONT, 132
PANEL ASSEMBLY-UPHOLSTERY DOOR, 126
PANEL COVER-INSTRUMENT, 154
PANEL COVER-SHOCK, 160,163,169,170C
PANEL COVER-STATIONARY, 155,167,170A
PANEL COVER-SWITCH, 151,154
PANEL LIGHT RHEOSTAT, 149,153,157,170,171
PANEL-GYRO COVER, 255
PANEL-STATIONARY INSTRUMENT, 51,53,55,56, 155,158,167,170A
PARACHUTE FLARE, 305
PARKING BRAKE BELLCRANK, 240,243
PARKING BRAKE CABLE, 240
PARKING BRAKE CATCH, 240,243
PARKING BRAKE CONTROL, 149,153,239,241
PARKING BRAKE CROSSARM, 239,241
PARKING BRAKE HANDLE, 239,241
PARKING BRAKE INSTALLATION, 239,241
PARKING BRAKE LINKAGE, 239,241
PARKING BRAKE POSITIONING RACK, 239,241
PARKING BRAKE SPRING, 239,240,241
PAWL-DRAIN VALVE, 277
PEDAL BEARING, 245
PEDAL BELLCRANK, 246
PEDAL INSTALLATION-RUDDER & BRAKE LH, 245
PHONE JACK, 149
PISTON ASSEMBLY-MASTER CYLINDER, 365
PISTON ASSEMBLY-SHIMMY DAMPENER, 348
PISTON ORIFICE, 101,102A
PISTON-BRAKE, 345
PITCH CONTROL-PROPELLER, 149,153,155,168,170C
PITOT HEATER, 254
PITOT KIT-HEATED, 374
PITOT LINE, 7
PITOT STATIC FLANGE, 51,53,55,56
PITOT STATIC LINE, 253
PITOT TUBE BODY, 254
PITOT TUBE CONNECTOR, 254
PITOT TUBE, 7,7C,254
PLACARD WATER RUDDER, 325
PLACARD-AMPHIBIAN, 329
PLACARD-AUXILIARY FUEL, 158
PLACARD-BAGGAGE & OR AUXILIARY PASSENGER, 343
PLACARD-CARBURETOR AIR TEMPERATURE INDICATOR, 167
PLACARD-CARBURETOR AIR TEMPERATURE GAGE, 170A
PLACARD-CATAGORY, 151
PLACARD-CESSNA, 157
PLACARD-DRAIN VALVE, 341,343
PLACARD-ENGINE OIL & TIRE PRESSURE, 151,154,157,341,343
PLACARD-FINISH & TRIM, 341,343
PLACARD-FLAP INSTRUCTIONS, 341,343
PLACARD-FUEL SELECTION, 341,343
PLACARD-FUEL SELECTOR VALVE, 130,341,343
PLACARD-INSTRUCTION-AUXILIARY FUEL, 271
PLACARD-MAP LIGHT, 341,343
PLACARD-OIL DILUTION, 170C,341,343
PLACARD-OPERATIONAL LIMITATIONS, 133,154,341,343
PLACARD-STARTER CIRCUIT OFF-ON, 171
PLACARD-TIRE & OIL, 173

P (cont)

PLACARD-VACUUM LIGHTS, 171
PLACARD-WINTERIZATION REMOVAL INSTRUCTIONS, 221,223,225,226
PLACARD-WINTERIZATION INFORMATION, 133,223,226,341,343
PLACARDS, 341,343
PLATE-KICK, 130
PLATE-LANDING GEAR FILLET, 91
PLATE-REGISTRATION NUMBER, 170D
PLATE-STRIKE-BAGGAGE DOOR, 121
PLUG-DISTRIBUTOR-PRIMER SYSTEM, 279
PLUG-DRAIN-BRAKE, 345
PLUG-FILLER-SHIMMY DAMPENER, 348
PLUG-FUEL DRAIN, 17,15
PLUG-OIL VALVE, 203,205,209
POINTER-STABILIZER TRIM, 299
PORTABLE STRETCHER, 175,176
POSITION LIGHT FAIRING, 4
POSITION LIGHT LENS, 4,4C
POWER RECEPTACLE-AUXILIARY, 301,303,303B
PRESSURE GAGE-MANIFOLD, 160,163,165,167,170A
PRESSURE GAGE-OIL, 161,163,167,170A,273
PRESSURE GAGE-OXYGEN, 333
PRESSURE LINE, 167,170A,198,201
PRIMER ASSEMBLY-ENGINE, 149,153,155, 167,170A,266,268
PRIMER LINE-CYLINDER, 207,211
PRIMER LINE, 197,199,266,268
PRIMER SYSTEM KIT-5 LINE, 374
PRIMER SYSTEM KIT-6 LINE, 374
PRIMER SYSTEM-FIVE LINE, 211
PRIMER SYSTEM, 204,207,211,278
PROP INSTALLATION INSTRUCTIONS DECAL, 363
PROP SPINNER DOME, 195
PROPELLER ASSEMBLY, 195,355,359,363
PROPELLER BALANCE WEIGHT, 360
PROPELLER BLADE, 357,359,363
PROPELLER CONTROL ARM, 199
PROPELLER CONTROL BALLJOINT, 197
PROPELLER CONTROL, 197,199
PROPELLER COUNTERWEIGHT, 355
PROPELLER GOVERNOR, 203,205,209,343B
PROPELLER HUB, 359,363
PROPELLER INSTALLATION, 195
PROPELLER PITCH CONTROL, 149,153,155,168,170C
PROPELLER SPINNER INSTALLATION, 195
PROPELLER-HARTZELL, 195,355
PROPELLER-MCCAULEY, 195,359
PULL BAR-BAGGAGE DOOR LATCH, 121
PULL-BAGGAGE DOOR, 131
PULLEY BRACKET-TAB, 46
PUMP-TRANSFER, 269
PUMP-VACUUM, 255,257,261,321
PYLON ASSEMBLY-ELEVATOR, 35

R

RACK-POSITIONING-PARKING BRAKE, 239,241
RADIO OPENING COVER, 151
RADIO SPEAKER BAFFLE, 309
RADIO-SEE CESSNA ELECTRONICS MANUAL
RAIL-FRONT SEAT, 37,39
RATCHET-FLAP LEVER, 296
REAR SEAT AIR VENT KIT, 374
REAR SEAT BACK, 147
REAR SEAT CATCH, 41
REAR SEAT CUSHION, 147
REAR SEAT LATCH, 147,148C
REAR SEAT VENTS INSTALLATION, 231

ALPHABETICAL INDEX

R (cont)

REAR SEAT, 147
REAR SPAR FUSELAGE, 67
REAR WINDOW, 42,49
RECEIVER-ASH, 132,135,153,155
RECEPTACLE-ASH, 153,155
RECEPTACLE-GROUND SERVICE PLUG, 303,303B
RECLINER CAM-SEAT BACK, 145F
RECLINER CAM-SEAT, 145B
RECLINING BACK FRONT SEAT INSTALLATION, 145B
RECLINING SEAT BACK, 145B
REGISTRATION NUMBER PLATE, 170D
REGULATOR-OXYGEN, 333
REGULATOR-VOLTAGE, 301
REST-ARM, 127,135
RETAINER ASSEMBLY-CORRECTION CARD, 170D
RETAINER ASSEMBLY-HEADLINER, 42,45
RETAINER-ASH RECEPTACLE, 132
RETAINER-COMPASS CARD, 160,163,169
RETAINER-HEADREST, 143,145,145C,148
RETAINER-UPHOLSTERY, 59,233
RETAINER-WINDOW, 47,49
RETAINER-WINDSHIELD, 41,45
RHEOSTAT ASSEMBLY-PANEL LIGHT, 149,153, 157,170,171
RING-FUEL GAGE ADAPTER, 15,17
RING-MOORING, 23,56,58,175
ROD ASSEMBLY-PUSH-BAGGAGE DOOR, 121
ROD END-THROTTLE CONTROL, 198,201
ROD-AILERON PUSH-PULL, 18,290
ROD-FLAP PUSH PULL, 21,296
ROD-FRONT SEAT ADJUSTMENT, 139
ROD-LATCH-FLAP LEVER, 296
ROD-PUSH PULL-COWL FLAPS, 249
ROD-SEAT ACTUATOR, 145F
ROLLER-SEAT, 140,143,145,145B,145F
ROTATING BEACON DOME, 307
ROTATING BEACON FIN TIP, 27,33,287
ROTATING BEACON INSTALLATION, 301,307
ROTATING BEACON KIT, 374
ROTATING BEACON LENS, 307
ROTATING BEACON SWITCH KNOB, 168
ROTATING BEACON, 307
RUB STRIP-AILERON CABLE, 67,69
RUDDER ASSEMBLY-SWEPT, 33
RUDDER ASSEMBLY, 31
RUDDER BALANCE WEIGHT, 31,33
RUDDER BELLCRANK-WATER, 323
RUDDER BELLCRANK, 31,33
RUDDER CAP-SWEPT TAIL, 27,33
RUDDER CAP, 287
RUDDER CONTROL CABLE, 282,285,287
RUDDER CONTROL SYSTEM INSTALLATION, 282,285,287
RUDDER PEDAL, 245
RUDDER RETRACT CABLE-WATER, 323
RUDDER SPAR, 31
RUDDER TIP, 31
RUDDER TORQUE TUBE, 31
RUDDER TRIM COVER, 288
RUDDER TRIM SYSTEM, 287
RUDDER TRIM TAB, 31
RUDDER TRIM WHEEL COVER, 130
RUDDER TRIM WHEEL, 287
RUG-GLOVE BOX SOUNDPROOFING, 173
RUG-MAP CASE SOUNDPROOFING, 173

S

SAFETY BELT, 140,143,148,148C
SAFETY VALVE, 237

S (cont)

SAMPLER CUP-FUEL, 176
SCOOP ASSEMBLY-AIR INTAKE, 180,183
SCOOP BOX-AIR, 183,188
SCOOP-CABIN AIR VENT, 9,9B
SCOOP-DRAIN, 42
SCRAPER-MUD, 92,95,98,99
SCREEN-FUEL STRAINER, 276
SCREW-ADJUSTABLE FRONT SEAT, 145F
SCUFF PLATE-BAGGAGE COMPARTMENT FLOOR, 129
SEAL ASSEMBLY-STABILIZER, 29
SEAL-AIR VENT INLET, 53,58,231
SEAL-CAMERA CUTOUT, 335
SEAL-FUSELAGE-FLOATPLANE, 324
SEAT ACTUATOR ROD, 145F
SEAT ADJUSTING SCREW, 145F
SEAT ADJUSTMENT ROD, 139
SEAT ARM- 145F
SEAT ASSEMBLY-FRONT, 139
SEAT AUTUATOR, 145
SEAT BACK LATCH ARM, 147
SEAT BACK-ADJUSTABLE, 145D
SEAT BACK-FRONT, 139,141
SEAT BACK-REAR, 147
SEAT BACK-RECLINING, 145B
SEAT BACK-STRETCHER, 176
SEAT BACK-TILTING, 145
SEAT BACKREST-AUXILIARY, 148C
SEAT BOTTOM MECHANISM INSTALLATION-ADJUSTABLE, 145D
SEAT CAM-RECLINER, 145B
SEAT CATCH-REAR, 41
SEAT COVER-FRONT, 139,141,145B,145D
SEAT COVER-REAR, 147
SEAT CUSHION-AUXILIARY, 148C
SEAT CUSHION-FRONT, 139,141,145,145B,145D
SEAT CUSHION-REAR, 147
SEAT FRAME-FRONT, 145F
SEAT HANDLE KNOB, 141
SEAT HANDLE-FRONT, 139,145C,145F
SEAT INSTALLATION-ADJUSTABLE FRONT, 145D
SEAT INSTALLATION-AUXILIARY, 148C
SEAT INSTALLATION-FRONT, 139,141
SEAT INSTALLATION-REAR, 147
SEAT INSTALLATION-RECLINING FRONT, 145B
SEAT LATCH HANDLE, 145B
SEAT LATCH-REAR, 147,148C
SEAT RAIL, 37,39
SEAT ROLLER, 140,143,145,145B,145F
SEAT SCREW BELLCRANK, 145F
SEAT SCREW COLLAR-ADJUSTABLE, 145F
SEAT STOP, 139
SEAT-CAMERA, 335,339
SEAT-WARM AIR VALVE, 234
SELECTOR HANDLE-FUEL, 265,266A,266D
SELECTOR VALVE ADAPTER-FUEL, 265,266C,268
SELECTOR VALVE-FUEL, 265,266A,266D,366
SELECTOR VALVE-VACUUM, 255,260
SENSITIVE ALTIMETER, 160,163,170D,253
SENSITIVITY ADJUSTER, TACTAIR, 319,319B
SEPARATOR-OIL, 255,257,261
SERVICE KIT-ENGINE BAFFLES, 214,217
SERVICE KIT-FUEL VENT, 16
SERVO & AMPLIFIER ASSEMBLY-ELEVATOR-TACTAIR, 315
SERVO & AMPLIFIER ASSEMBLY-AILERON-TACTIAR, 314,318
SERVO-AILERON-TACTAIR, 314,315C,318,319C
SERVO-TACTAIR, 314
SHAFT & WORM ASSEMBLY-SPEED ADJUSTMENT-GOVERNOR, 343B
SHAFT ASSEMBLY-DOOR LATCH, 118
SHAFT DOOR HANDLE, 105,107,111
SHAFT-CABIN HEATER VALVE, 233

ALPHABETICAL INDEX

S (cont)

SHAFT-FUEL SELECTOR, 265,266D
SHAFT-TACHOMETER DRIVE, 160,163,167,170A
SHELF-BAGGAGE, 129
SHIELD ASSEMBLY-CONTROL TEE, 130
SHIELD ASSEMBLY-COURTESY LIGHT, 310
SHIELD ASSEMBLY-INSTRUMENT LIGHT, 309
SHIELD ASSEMBLY-RUDDER BAR, 130
SHIELD ASSEMBLY, 155
SHIELD INSTALLATION-WINTERIZATION, 223
SHIELD-FRONT SPAR, 134
SHIELD-IGNITION SWITCH, 149,153
SHIELD-LEFT DOOR POST UPPER, 134
SHIELD-NAVIGATION LIGHT, 4C
SHIELD-RIGHT DOOR POST UPPER, 134
SHIM-LANDING GEAR, 91
SHIM-SPRING ADJUSTMENT, 93
SHIM-SPRING ALIGNMENT, 91
SHIM-STEERING ARM, 101,102A
SHIM-STRIKE PLATE-BAGGAGE DOOR, 121
SHIMMY DAMPENER ARM, 98A,97
SHIMMY DAMPENER FILLER PLUG, 348
SHIMMY DAMPENER PISTON, 348
SHIMMY DAMPENER, 97,98A,348
SHOCK MOUNT-ENGINE, 203,205,209
SHOCK MOUNT, 160,163,168,170C
SHOCK MOUNTED INSTRUMENT PANEL, 160,163,168,170C
SHOCK PANEL COVER, 160,163,169,170C
SHOCK STRUT-LOWER, 101
SHOCK STRUT-NOSE GEAR, 98A,101,102A
SHOULDER HARNESS HOOK, 175
SHOULDER HARNESS KIT, 374
SHOULDER HARNESS, 175
SHROUD ASSEMBLY, 229
SHROUD-EXHAUST MUFFLER, 226
SHUTTER ASSEMBLY-WINTERIZATION, 221
SHUTTER BOX-WINTERIZATION, 225
SIDE WINDOW, 49
SILL ASSEMBLY-DOOR, 41,45
SKI AXLE KIT, 374
SKI AXLE, 91,93
SKIN ASSEMBLY-CABIN TOP, 47
SKIN ASSEMBLY-FUSELAGE TOP, 45
SKIN ASSEMBLY-REAR CABIN TOP STA 65.33 TO 108.00, 49
SKIN-DECK, 56
SKINS & STRINGERS INSTALLATION-EXTENDED RANGE WING, 13B
SKINS & STRINGERS INSTALLATION, 5,7B,7D,13
SKIRT-FRONT SEAT, 139
SKIRT-SEAT BOTTOM, 145B
SKYLANE NAMEPLATE, 341
SLIDE ASSEMBLY-TIE DOWN, 175
SOCKET-BALL CONTROL TUBE, 149,153,157,169,170D
SOCKET-BALL RH-CONTROL TUBE, 153,169
SOCKET-COURTESY LIGHT, 310
SOLENOID CONTACTOR-MASTER, 301
SOLENOID DIODE-MASTER, 301
SOUNDPROOFING-COWL DECK, 122
SOUNDPROOFING-FIBERGLASS MAT, 123
SOUNDPROOFING-SHIELD, 134
SPAR ASSEMBLIES, 7D
SPAR ASSEMBLY-ELEVATOR, 35
SPAR ASSEMBLY-FIN REAR, 24,25
SPAR ASSEMBLY-FRONT FIN, 25
SPAR ASSEMBLY-FUSELAGE CENTER SECTION FORWARD, 59,63
SPAR ASSEMBLY-FUSELAGE REAR, 67
SPAR ASSEMBLY-RUDDER, 31
SPAR ASSEMBLY-STABILIZER, 27B
SPAR BEARING BLOCK, 59,63,67,69
SPAR CAP-FRONT, 41,46
SPAR-AILERON, 18

S (cont)

SPAR-CENTER SECTION, 69
SPAR-FLAP, 21
SPARS-WING, 5,7B,11
SPEAKER INSTALLATION, 301,309
SPEAKER-RADIO, ALSO SEE CESSNA ELECTRONICS MANUAL
SPEAKER-RADIO, 309,310
SPEED FAIRING COVER PLATE, 98,99
SPEED FAIRING INSTALLATION, 95
SPEED FAIRING KIT, 374
SPEED FAIRING-NOSE GEAR, 97,98A
SPEED INDICATOR-AIR, 160,163,169,170D,253
SPEED INDICATOR-VERTICAL, 162,165,169,170D,253
SPIDER HUB-PROPELLER, 355
SPINNER ASSEMBLY-PROPELLER, 195
SPINNER DOME-PROP, 195
SPLICE STRIP-COWL, 179,180,183,187,191
SPOTLIGHT ASSEMBLY-MAP, 309
SPRING & CABLE ASSEMBLY-FLOATPLANE, 327
SPRING-BRAKE & RUDDER RETURN, 245
SPRING-DOOR HANDLE, 105,109,111,115,115B
SPRING-DOORSTOP, 105,107,111,115B
SPRING-LANDING GEAR HEAVY DUTY, 91
SPRING-LANDING GEAR, 91,93
SPRING-LATCH RETURN-FLAP LEVER, 296
SPRING-PARKING BRAKE, 239,240,241
SPRING-SEAT HANDLE, 141
SPRING-SEAT LATCH PIN, 145F
SPRING-TAILWHEEL STEERING, 285
SPROCKET ASSEMBLY-STABILIZER TRIM, 299
SPROCKET-AILERON CHAIN, 280
STABILIZER ACTUATOR BOOT, 367
STABILIZER ACTUATOR ASSEMBLY, 299,367
STABILIZER ASSEMBLY, 27B
STABILIZER FAIRING, 29
STABILIZER HINGE, 29
STABILIZER INSTALLATION, 27B
STABILIZER SEAL GUIDE, 82
STABILIZER SEAL, 29
STABILIZER SPAR, 27B
STABILIZER STOP, 25
STABILIZER TIP, 29
STABILIZER TRIM CHAIN, 299
STABILIZER TRIM CONTROL SYSTEM INSTALLATION, 299
STABILIZER TRIM CONTROL CABLE, 299
STABILIZER TRIM POINTER, 299
STABILIZER TRIM WHEEL, 299
STACK ASSEMBLY-EXHAUST, 203,209,226,229
STACK-EXHAUST, 205,229
STAINLESS STEEL CABLES, SEE INDIVIDUAL CABLE FIGURES
STALL WARNING HORN, 154,157,173A
STALL WARNING INDICATOR, 149
STALL WARNING WING UNIT, 3,4A
STAND PIPE-HEATER, 371

ALPHABETICAL INDEX

S (cont)

STARTER CIRCUIT PLACARD, 171
STARTER SWITCH & LOCK KIT, 170A
STARTER SWITCH, 149,153,155,167,170A
STARTING VIBRATOR, 302
STATIC SOURCE LINE, 253
STATIONARY INSTRUMENT PANEL, 51,53,55,56, 155,158,167,170A
STATIONARY INSTRUMENT PANEL EQUIPMENT, 149, 153,167,170A
STATIONARY PANEL COVER, 155,167,170A
STEERING ARM SHIM, 101,102A
STEERING ARM, 101,102A
STEERING BELLCRANK-TAILWHEEL, 285
STEERING CABLE-TAILWHEEL, 103,285
STEERING LINKAGE BOOT, 56
STEERING ROD BOOT-NOSE WHEEL, 55
STEM-PITOT TUBE, 254
STENCIL BIRD, 343
STENCIL CESSNA 180, 343
STENCIL CESSNA, 341
STENCIL ONE EIGHTY, 343
STENCIL 180, 343
STENCIL 182, 341
STENCILS, 341,343
STEP ASSEMBLY-AMPHIBIAN, 330
STEP ASSEMBLY-FLOATPLANE, 324
STEP ASSEMBLY, 37,93
STEWART WARNER HEATER INSTALLATION, 235
STINGER ASSEMBLY, 89
STINGER INSTALLATION, 89
STOP ASSEMBLY-DOOR, 105,107,111,113,115B
STOP HINGE-DOOR, 105,111
STOP-DOOR LATCH, 107,113
STOP-ELEVATOR LOWER, 85,87
STOP-ELEVATOR UPPER, 85,87
STOP-SEAT, 139
STOP-STABILIZER, 25
STRAINER ASSEMBLY-FUEL, 276
STRAINER BODY-FUEL, 276
STRAINER BOWL-FUEL, 276
STRAINER DRAIN CONTROL, 155,168,170C,277
STRAINER INSTALLATION-FUEL, 266,266C,268,276
STRAINER-FUEL TANK, 15,17
STRAP ASSEMBLY-LATCH, 117,118
STRAP-ASSIST, 134
STRAP-BREATHER LINE, 203,205
STRAP-ENGINE BONDING, 203,205,209
STRAP-GROUND-ENGINE MOUNT, 197,199
STRAP-GROUND, 160,163,168,170C
STRAP-OIL DRAIN, 203,205
STRAP-SHOULDER HARNESS REINFORCEMENT, 42,45
STRAP-TIEDOWN-STRETCHER, 176
STRETCHER INSTALLATION, 176
STRETCHER KIT, 374
STRETCHER REAR SEAT BACK, 176
STRETCHER WALL BAG, 176
STRETCHER, 175,176,177A
STRIKE PLATE-BAGGAGE DOOR, 121
STRIKE PLATE-DOOR LATCH, 67,69
STRIKER PLATE-DECORATIVE, 341
STRINGER-ENGINE MOUNT, 51,53,55,56
STRIP-CHROME DECORATIVE, 151
STRIP-COWL ATTACHMENT, 51,53,55,56
STRIP-SPLICE-COWL, 179,180,183,187,191
STRIP-TRIM, 154
STRIP-WINDSHIELD, 71
STRUCTURE ASSEMBLY-CABIN DOOR LH, 105,107
STRUCTURE ASSEMBLY-CABIN DOOR RH, 111,113,115B
STRUCTURE ASSEMBLY-WING EXTENDED RANGE, 7D
STRUCTURE ASSEMBLY-WING CORROSION PROOF, 5,7B
STRUCTURE ASSEMBLY-FUSELAGE FRONT SECTION, 45,51, 53,55,56

S (cont)

STRUCTURE ASSY-WING, 3,4A,5,7D,7B
STRUT ASSEMBLY-NOSE GEAR, 97,98A
STRUT ASSEMBLY, 23
STRUT ATTACHMENT BLOCK-FLOATPLANE, 323,325,329
STRUT FAIRING KIT, 374
STRUT INSTALLATION-WING, 23
SUCTION GAGE, 158,162,167,170A,255,257,261,313, 315C,317,319B
SUCTION RELIEF VALVE, 321
SUMP ASSEMBLY-PITOT STATIC SOURCE, 254
SUN VISOR KIT, 374
SUN VISOR, 175
SUPPORT ASSEMBLY-CONTROL TEE, 51,53,73
SUPPORT ASSEMBLY-INTERIOR TRIM, 81
SUPPORT-AUTOMATIC OXYGEN SYSTEM ASSEMBLY, 333B
SUPPORT-BAGGAGE SHELF, 42
SUPPORT-CARBURETOR AIR BOX, 205
SUPPORT-FLARES, 305
SUPPORT-HEADREST, 148
SUPPORT-OIL COOLER, 207
SUPPORT-STRAINER DRAIN CONTROL, 170A
SWEPT DORSAL, 26
SWEPT RUDDER, 33
SWITCH ASSEMBLY-FLAME, 369
SWITCH ASSEMBLY-FLARE, 305
SWITCH ASSEMBLY-MASTER, 149,153,155,168,170C
SWITCH ASSEMBLY-NAV LIGHT, 149,155,168,170C
SWITCH ASSEMBLY-OVERHEAT, 369
SWITCH ASSEMBLY-POSITION LIGHT, 149,155,168,170C
SWITCH PANEL COVER, 151,154
SWITCH-AUXILIARY FUEL, 158,168,170C
SWITCH-DOME LIGHT, 309
SWITCH-FUEL TRANSFER, 271
SWITCH-HEATER, 151,237
SWITCH-LANDING LIGHT, 149,153,155,168,170C
SWITCH-MAP LIGHT, 309
SWITCH-MARKER BEACON, 168,170C
SWITCH-OIL DILUTION, 157,168,170C,273
SWITCH-PITOT HEATER, 158,168,170C,254
SWITCH-PUSH BUTTON-VACUUM PRESS TO TEST, 171
SWITCH-RADIO, 168,170C
SWITCH-ROTATING BEACON, 168,170C
SWITCH-STARTER CUTOUT, 171
SWITCH-STARTER, 149,153,155,167,170A
SWITCH, STARTER & LOCK KIT, 170A
SYSTEMS, SEE INDIVIDUAL LISTINGS

T

TAB PULLEY BRACKET, 46
TAB-RUDDER TRIM, 31
TACHOMETER DRIVE SHAFT, 160,163,167,170A
TACHOMETER, 160,163,167,170A
TACTAIR AUTO PILOT INSTL.-T-1, 317
TACTAIR AUTO PILOT INSTL.-T-2, 319,319B
TACTAIR AUTO PILOT INSTL.-T-3, 313,315B
TACTAIR CABLE, 314,318
TACTAIR COMMAND CONTROL, 313,315B
TACTAIR ELEVATOR AMPLIFIER, 315C
TACTAIR KIT-T-2, 374A
TACTAIR SENSITIVITY ADJUSTER, 319,319B
TACTAIR TEE BLOCK, 313
TAIL LIGHT LAMP, 89
TAIL LIGHT LENS, 89
TAIL LIGHT PAN, 89
TAIL LIGHT, 89
TAILCONE ASSEMBLY-FUSELAGE, 81
TAILCONE ASSEMBLY-FUSELAGE STA 209.00 TO 230.187, 85,87

ALPHABETICAL INDEX

T (cont)

TAILCONE FITTING, 85
TAILGEAR MOUNTING CASTING, 85
TAILPIPE, 227
TAILWHEEL & TIRE, 353
TAILWHEEL ARM ASSEMBLY, 253
TAILWHEEL ASSEMBLY, 103,353
TAILWHEEL CABLE FAIRING, 82
TAILWHEEL FAIRING, 353
TAILWHEEL FORK, 353
TAILWHEEL INSTALLATION, 103
TAILWHEEL SPRING, 285
TAILWHEEL STEERING BELLCRANK, 285
TAILWHEEL STEERING CABLE, 103,285
TAILWHEEL STEERING FITTING, 103,282
TANK ASSEMBLY-FUEL -AUXILIARY, 269
TANK ASSEMBLY-FUEL EXTENDED RANGE, 17
TANK ASSEMBLY-FUEL, 15
TANK GAGE UNIT-FUEL, 16
TANK INSTALLATION-FUEL EXTENDED RANGE, 17
TANK INSTALLATION-FUEL, 4A,15
TEE ASSEMBLY-RESTRICTOR-TACTAIR, 317,319B
TEE BLOCK-TACTAIR, 313
TEE-CONTROL, 280
TEE-TEST-TACTAIR, 315C,317
TEMPERATURE GAGE LEAD-CYLINDER, 162,165,167,170A
TEMPERATURE GAGE-CARBURETOR AIR, 162,165,167,170A
TEMPERATURE GAGE-OIL, 161,163,167,170A,273
TEMPERATURE GAGE-OUTSIDE AIR, 175
TEST FITTING-TACTAIR, 313
THERMOCOUPLE LEAD, 162,165,167
THERMOCOUPLE-ENGINE, 205,209
THERMOSTAT-REMOTE CONTROL, 235
THROTTLE CONTROL ROD END, 198,201
THROTTLE CONTROL, 149,153,155,168,170C,198,201
THUMB LATCH-CABIN DOOR, 112
TIARA ASSEMBLY, 123
TIE DOWN RINGS, 175
TILTING FRONT SEAT INSTALLATION, 145
TILTING SEAT BACK, 145
TINTED WINDOW, 47
TIP ASSEMBLY-WING, 6,7,7C,7F
TIP-ELEVATOR, 35
TIP-FIN, 25
TIP-RUDDER, 31
TIP-STABILIZER, 29
TIP-VERTICAL FIN-ROTATING BEACON, 307
TIRE EXPANDER, 176
TIRE INFLATION VALVE, 176,346,347
TIRE PRESSURE PLACARD, 151,154,157,341,343
TIRE-TUBELESS 5.00 X 5 6 PLY, 347A
TIRE-TUBELESS 6.00X6 6 PLY, 346
TIRE-5.00 X 5 6PLY, 346
TIRE-6.00X6 4 PLY, 345
TIRE-6.00X6 6 PLY, 92,345,349
TIRE-8 INCHES S.C., 353,354
TOP ASSEMBLY-CABIN, 41,46
TOP HEADLINER, 123
TORQUE LINK-LANDING GEAR, 101,102,102A
TOW BAR, 176
TRANSFER PUMP, 269
TRANSFER SWITCH DECAL, 271
TRANSMITTER & FLOAT-FUEL, 17
TRANSMITTER-OIL PRESSURE, 207,212
TRAY-ASH, 132,135
TREAD-STEP, 93
TRIM CABLE-ELEVATOR, 293
TRIM CONTROL CABLE-STABILIZER, 299
TRIM CONTROL INDICATOR, 299
TRIM PLACARD, 341,343
TRIM WHEEL COVER-RUDDER, 130
TRIM WHEEL COVER, 299
TUBE ASSEMBLY-AILERON CARRY THRU, 288

T (cont)

TUBE ASSEMBLY-COLD AIR INTAKE, 229
TUBE ASSEMBLY-ELEVATOR TORQUE, 35
TUBE ASSEMBLY-NOSE GEAR STEERING, 97,98A
TUBE ASSEMBLY-PITOT, 7,7C,254
TUBE ASSEMBLY-RUDDER TORQUE, 31
TUBE EXHAUST, 227
TUBE-AIR VENT, 265
TUBE-AXLE, 97,98A
TUBE-BELLCRANK TO CONTROL TEE, 291
TUBE-BELLCRANK TO ELEVATOR PYLON, 291
TUBE-BREATHER LINE, 203,205,209
TUBE-CONTROL, 280
TUBE-DUAL BRAKE, 246
TUBE-EXHAUST STACK STABILIZER, 204
TUBE-GENERATOR BLAST, 204,207,211
TUBE-OIL DRAIN LINE, 203,205
TUBE-OVERFLOW DRAIN, 15
TUBE-PARKING BRAKE, 240,243
TUBE-SEAT BACK RECLINER, 145F
TUBE-SEAT HANDLE, 141
TUBE-SEAT LOCK, 141
TUBE-SHOCK STRUT, 101
TUBE-TAILWHEEL SPRING MOUNTING, 100
TUBE-5.00 X 5, 346
TUBE-6.00X6, 92,346,349
TUBE-8 INCHES X 3-1/4 INCHES S.C., 353,354
TUBELESS TIRE, 346,347A
TUNNEL ASSEMBLY-AIR INTAKE, 179
TUNNEL ASSEMBLY-FUSELAGE FORWARD, 55,56,73
TUNNEL CARPET, 130
TUNNEL COVER, 73
TUNNEL-FUEL STRAINER, 74
TURN & BANK INDICATOR, 162,165,169,170D

U

UNIVERSAL JACK POINT, 175
UNIVERSAL JOINT-CONTROL TEE, 280
UPHOLSTERY HANGER, 47
UPHOLSTERY INSTALLATION-CABIN TOP & FIREWALL, 122
UPHOLSTERY INSTALLATION-CABIN DOORS, 126
UPHOLSTERY INSTALLATION-FLOORBOARD & BAGGAGE COMPARTMENT, 129
UPHOLSTERY INSTALLATION-CABIN SIDE PANELS, 132
UPHOLSTERY RETAINER, 59,233
UPPER COWL, 179,180,183,191

V

VACUUM DISCHARGE HOSE, 255
VACUUM LIGHTS PLACARD, 171
VACUUM PUMP, 255,257,261,321
VACUUM SELECTOR VALVE, 255,260
VACUUM SYSTEM COMPONENTS-FORWARD OF FIREWALL, 209
VACUUM SYSTEM INSTALLATION-ENGINE DRIVEN, 261
VACUUM SYSTEM INSTALLATION-TACTAIR, 315,319
VACUUM SYSTEM KIT, 374A
VACUUM SYSTEM-ENGINE DRIVEN, 255,257
VACUUM SYSTEM-TACTAIR, 321
VACUUM WARNING LIGHT BULB, 171
VALVE ASSEMBLY-AIR, 203
VALVE ASSEMBLY-CABIN HEATER, 233
VALVE ASSEMBLY-CABIN AIR, 233
VALVE ASSEMBLY-DEFROSTER, 233
VALVE ASSEMBLY-FUEL VENT, 15,17
VALVE ASSEMBLY-FUEL CONTROL-HEATER, 369
VALVE ASSEMBLY-RELIEF-GOVERNOR, 343C

ALPHABETICAL INDEX

V (cont)

VALVE ASSEMBLY-SAFETY, 237
VALVE ASSEMBLY-SELECTOR-VACUUM, 255,260
VALVE ASSEMBLY-TACTAIR, 313
VALVE ASSEMBLY-WARM AIR, 234
VALVE GASKET-OIL, 203,205,209
VALVE GUIDE-DEFROSTER, 233
VALVE-CHECK-AUXILIARY FUEL SYSTEM, 269
VALVE-DRAIN-AUXILIARY FUEL SYSTEM, 269
VALVE-DRAIN, 276,277
VALVE-FLUSH, 15
VALVE-FUEL SELECTOR, 265,266A,266D,366
VALVE-OIL DRAIN, 203,205,209
VALVE-OXYGEN FILLER, 333B
VALVE-OXYGEN, 333,333B
VALVE-SHUT OFF-TACTAIR, 315B
VALVE-SUCTION RELIEF, 321
VALVE-TUBELESS TIRE INFLATION, 176,346,347
VALVE-WEMAC, 231
VENT ASSEMBLY-AUXILIARY FUEL SYSTEM, 269
VENT ASSEMBLY-FUEL CELL, 41
VENT BOX-AIR, 231
VENT DOOR-AIR, 53,58
VENT HOSE, 255
VENT INLET-AIR, 53,58,231
VENT LINE, 17,266D
VENT OUTLET, 231
VENT SEAL-AIR, 53,58,231
VENT TUBE-FUEL CELL, 265,266D
VENT-FUEL SERVICE KIT, 16
VENT-REAR SEAT, 231
VENTILATING SYSTEM, 231
VERTICAL FIN HINGE, 25
VERTICAL SPEED INDICATOR, 162,165,169,170D,253
VIBRATOR-STARTING, 302
VIEW FINDER COVER PLATE, 339
VISOR-SUN, 175
VOLTAGE REGULATOR, 301

W

WARNING HORN-STALL, 154,157,173A
WARNING LIGHT BULB-VACUUM, 171
WASHER-ENGINE MOUNT, 197,199
WATER RUDDER CABLE BELLCRANK, 323
WATER RUDDER PLACARD, 325
WATER RUDDER RETRACT CABLE, 323
WEATHER STRIP-CABIN DOOR, 105
WEDGE-LANDING GEAR SUPPORT, 91
WEIGHT-AILERON BALANCE, 18
WEIGHT-BALANCE-PROPELLER, 360
WEIGHT-BALANCE, 363
WEIGHT-ELEVATOR BALANCE, 35
WEIGHT-RUDDER BALANCE, 31,33
WEMAC ADAPTER, 231
WEMAC VALVE, 231
WHEEL & BRAKE ASSEMBLIES-MAIN GEAR, 95
WHEEL & BRAKE ASSEMBLIES-MAIN GEAR TUBELESS TIRE, 95
WHEEL & BRAKE ASSEMBLY-MAIN LANDING GEAR, 345
WHEEL & BRAKE ASSEMBLIES-CROSSWIND LANDING GEAR, 349
WHEEL & BRAKE ASSEMBLIES-CROSSWIND GEAR, 92
WHEEL & BRAKE ASSEMBLIES-FIXED GEAR, 92,95
WHEEL & TIRE ASSEMBLY-TAILWHEEL, 353
WHEEL ASSEMBLY-CROSSWIND, 349
WHEEL ASSEMBLY-NOSE GEAR, 97,98A,346,347A
WHEEL ASSEMBLY-RUDDER TRIM, 287
WHEEL ASSEMBLY-STABILIZER TRIM, 299
WHEEL AXLE BOOT-CROSSWIND, 349

W (cont)

WHEEL BRAKE & COLLAR ASSEMBLY-CROSSWIND, 92,349
WHEEL COVER-RUDDER TRIM, 130
WHEEL COVER-TRIM, 299
WHEEL EMBLEM-CONTROL, 281
WHEEL FAIRING, 91
WHEEL PARTS, 95,97,98A
WHEEL-BLOWER-HEATER, 369
WHEEL-CONTROL, 280
WHEEL-TAIL, 103,353
WINDLACE ASSEMBLY-UPHOLSTERY, 134
WINDOW ASSEMBLY-DOOR LH, 106,109
WINDOW ASSEMBLY-DOOR RH, 112,113
WINDOW COVER-CAMERA, 335
WINDOW COVER-OBSERVATION, 335
WINDOW DOOR ARM, 109,115
WINDOW FAIRING, 49
WINDOW FRAME-DOOR, 106
WINDOW FRAME, 47
WINDOW GLASS, 106,109,112,115,115B
WINDOW HINGE-DOOR, 106,112,115
WINDOW LATCH-DOOR, 106,112
WINDOW RETAINER, 47,49
WINDOW-CAMERA GLASS, 335
WINDOW-LANDING LIGHT, 4,4A
WINDOW-REAR, 42,49
WINDOW-SIDE, 49
WINDOW-TINTED, 47
WINDOW-VIEW FINDER PLEXIGLAS, 339
WINDOW, 47
WINDSHIELD ASSEMBLY, 71
WINDSHIELD INSTALLATION, 37,39,71
WINDSHIELD PAD, 71
WINDSHIELD RETAINER, 41,45
WING ASSEMBLY-COMPLETE LH EXTENDED RANGE, 4A
WING ASSEMBLY, 3,4A
WING FAIRING, 3,4A
WING FILLET, 37,39
WING FLAP, 21
WING LEADING EDGE, 5,7B,7D,9,9B
WING SPAR, 5,7B,11
WING STRUCTURE-EXTENDED RANGE, 7D
WING STRUCTURE, 3,4A,5,7B
WING STRUT FAIRING INSTALLATION, 23
WING STRUT, 23
WING TIP, 6,7,7C,7F
WING UNIT-STALL WARNING, 3,4A
WING UNIT-STALL WARNING HEATED, 3,4A
WINTERIZATION CONTROL, 158,170,221,225
WINTERIZATION COVER, 223
WINTERIZATION EQUIPMENT INSTALLATION, 221,225
WINTERIZATION INSTALLATION-LARGE OIL COOLER, 221,225
WINTERIZATION INSTALLATION-SMALL OIL COOLER, 221,225
WINTERIZATION KIT, 374B
WINTERIZATION PLACARD, 221,223,225,226
WINTERIZATION SHUTTER BOX, 225
WIRE-HEADLINER, 123

PARTS LISTING

Wing

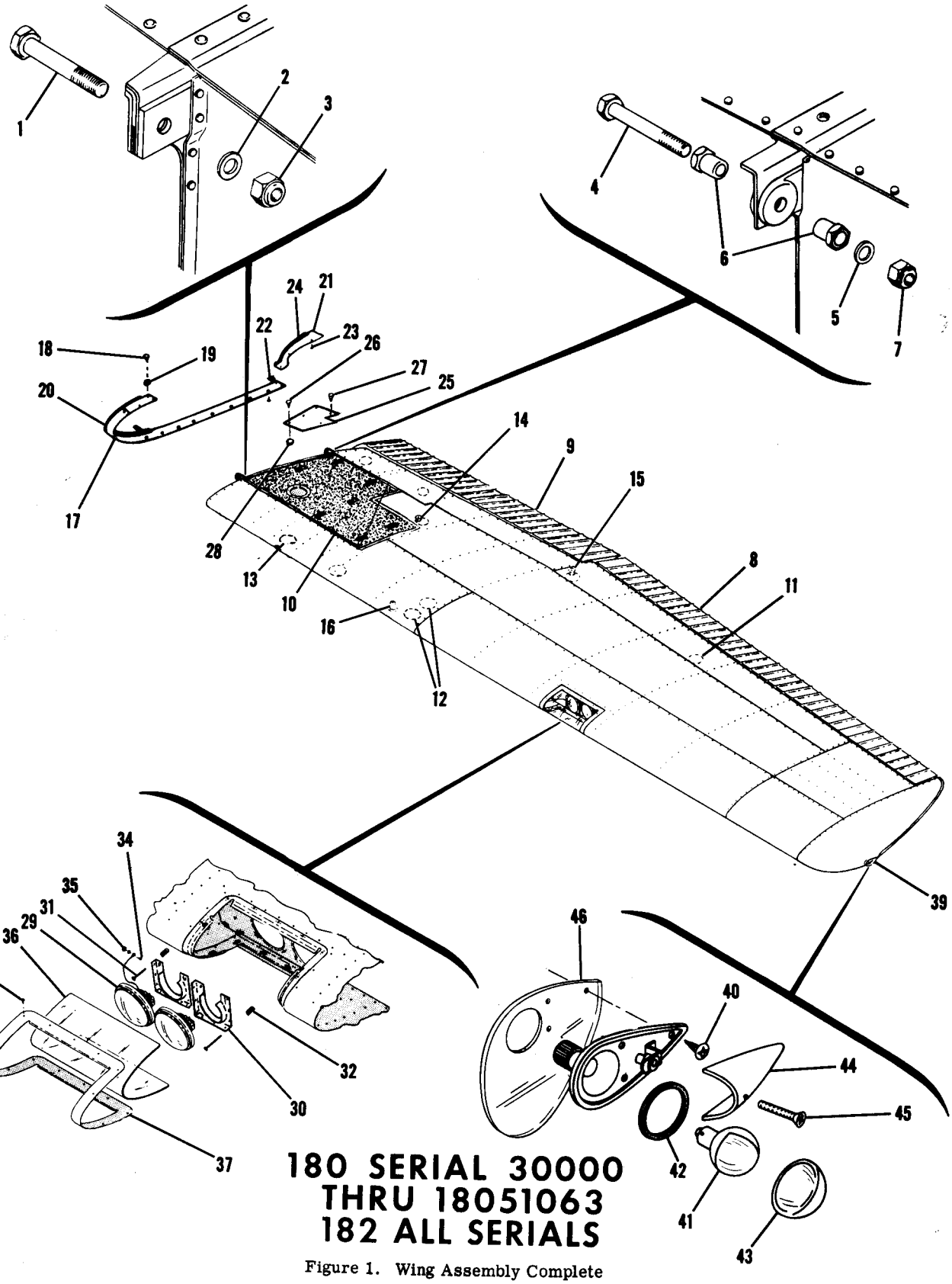

180 SERIAL 30000 THRU 18051063
182 ALL SERIALS

Figure 1. Wing Assembly Complete

FIGURE AND INDEX NO.	PART NUMBER	DESCRIPTION 1 2 3 4 5 6 7	UNITS PER ASSY	USABLE ON CODE
1-		WING ASSEMBLY-COMPLETE LH	NP	
		WING ASSEMBLY-COMPLETE RH	NP	
		ATTACHING PARTS		
- 1	AN8-23A	BOLT	1	
- 2	AN960-816	WASHER	1	
- 3	MS20365-820C	NUT	1	
- 4	AN7-24A	BOLT	1	
- 5	AN960-716	WASHER	1	
- 6	0512123	BUSHING	2	
- 7	MS20365-720C	NUT	1	
		---*---		
- 8		AILERON INSTALLATION SEE FIGURE 7	1	
- 9		FLAP INSTALLATION SEE FIGURE 8	1	
- 10		CELL INSTALLATION-FUEL SEE FIGURE 6	1	
- 11	S-225-2	PLATE-INSPECTION-----CESSNA STANDARD	8	E
		ATTACHING PARTS		
	S-1022Z-8-8	SCREW CESSNA STANDARD	3	E
		---*---		
	S-225-2	PLATE-INSPECTION-----CESSNA STANDARD	6	F
		ATTACHING PARTS		
	S-1022Z-8-8	SCREW CESSNA STANDARD	3	F
		---*---		
- 12	S-225-2	PLATE-INSPECTION-----CESSNA STANDARD	2	E
		ATTACHING PARTS		
	S-1022Z-8-8	SCREW CESSNA STANDARD	6	
		---*---		
- 13	S-225-1	PLATE-INSPECTION-----CESSNA STANDARD	2	
		ATTACHING PARTS		
	S-1021Z-8-8	SCREW CESSNA STANDARD	6	
		---*---		
- 14	S-378-2	PULLEY-FLAP CONTROL CESSNA STANDARD SEE FIGURE 109	1	
- 15	S-378-3L	PULLEY-AILERON CONTROL CESSNA STANDARD SEE FIGURE 107	1	
- 16	0511062-4	WING UNIT-STALL WARNING LH WING ONLY	1	
	0511062-5	WING UNIT-STALL WARNING HEATED-----LH WING ONLY	1	
		ATTACHING PARTS		
	S-1021Z-8-6	SCREW CESSNA STANDARD	4	
	NAS395-17-3	NUT TIN A1348-8Z-3	4	
		---*---		
	0792000-5	STRUCTURE ASSEMBLY-WING LH---- SEE FIGURE 2	1	C
	0792000-7	STRUCTURE ASSEMBLY-WING LH---- SEE FIGURE 2	1	D
	0792000-11	STRUCTURE ASSY-WING LH CORROSION PROOF SEE FIGURE 2	1	C
	0792000-13	STRUCTURE ASSY-WING LH CORROSION PROOF SEE FIGURE 2	1	D
	0792000-2	STRUCTURE ASSY-WING RH SEE FIGURE 2	1	C
	0792000-6	STRUCTURE ASSY-WING RH SEE FIGURE 2	1	D
	0792000-10	STRUCTURE ASSY-WING RH CORROSION PROOF SEE FIGURE 2	1	C
	0792000-12	STRUCTURE ASSY-WING RH CORROSION PROOF SEE FIGURE 2	1	D
	0792000-14	STRUCTURE ASSEMBLY-WING RH	1	F
	0792000-15	STRUCTURE ASSEMBLY-WING LH	1	F
	0792000-16	STRUCTURE ASSEMBLY-WING RH---- CORROSION PROOF SEE FIGURE 2	1	F
	0792000-17	STRUCTURE ASSEMBLY-WING LH---- CORROSION PROOF SEE FIGURE 2	1	F
- 17	0720002-1	FAIRING ASSEMBLY-WING LOWER FORWARD LH	1	A
	0720002-9	FAIRING ASSEMBLY-WING LOWER FORWARD LH	1	B
	0720002-2	FAIRING ASSEMBLY-WING LOWER FORWARD RH	1	A
	0720002-10	FAIRING ASSEMBLY-WING LOWER FORWARD RH	1	B
		ATTACHING PARTS		
- 18	S-1021Z-8-8	SCREW	6	
- 19	S-290D832	WASHER	6	
		---*---		
- 20	0520005-3	RUB STRIP	1	
- 21	0520008	FAIRING ASSEMBLY-WING LOWER AFT LH	1	
	0520008-1	FAIRING ASSEMBLY-WING LOWER AFT RH	1	
		ATTACHING PARTS		
- 22	NAS395-18-3	NUT	2	
- 23	S-1022Z-8-6	SCREW	2	
		---*---		
- 24	S-202RB	MOULDING-RUBBER CHANNEL	AR	
- 25	0520007	PLATE-WING UPPER AFT FAIRING LH	1	G
	0520007-1	PLATE-WING UPPER AFT FAIRING RH	1	G
		ATTACHING PARTS		
- 26	AN520-10R5	SCREW LH ONLY	6	
- 27	S-1021Z-8-8	SCREW RH ONLY	6	
- 28	4600-02	DOME NUT NUS	6	
		---*---		
		S-PART NOS APPEARING ON THIS PAGE ARE CESSNA STANDARDS		
		CONTINUED ON PAGE 4		

180 SERIAL 30000 THRU 18051063

182 ALL SERIALS

FIGURE AND INDEX NO.	PART NUMBER	DESCRIPTION 1 2 3 4 5 6 7	UNITS PER ASSY	USABLE ON CODE
1- 29	0523118-1	LIGHT-LANDING LH WING ONLY---------- ATTACHING PARTS	2	
- 30	0423542-6	BRACKET ASSEMBLY----------	2	
- 31	AN515-8R24	SCREW LH ONLY ----------	8	
- 32	0713124-1	SPRING----------	8	
- 33		DELETED, NOT PROCURABLE ---------- ---*---		
- 34	AN515-8R7	SCREW-GROUNDING LH WING ONLY ----------	1	
- 35	MS20365-832C	NUT-GROUNDING LH WING ONLY----------	1	
- 36	0722100-4	WINDOW-LANDING LIGHT LH WING ONLY ---------- ATTACHING PARTS	1	
- 37	0722100-3	RETAINER-WINDOW ----------	1	
- 38	S-1022Z-8-8	SCREW CESSNA STANDARD ---------- ---*---	14	
- 39	0423006-12	LIGHT ASSEMBLY-WING NAVIGATION LH ----------	1	
	0423006-13	LIGHT ASSEMBLY-WING NAVIGATION RH ---------- ATTACHING PARTS	1	
- 40	S-1021Z-8-6	SCREW CESSNA STANDARD ---------- ---*---	3	
- 41	A7512-12	BULB-WING NAVIGATION LIGHT 12 VOLT----------	1	
- 42	A-1257A	GASKET-NAVIGATION LIGHT ----GMC ----------	1	
- 43	A-1280-2	LENS-NAVIGATION LIGHT LH---- RED GMC ----------	1	
	A-1280-3	LENS-NAVIGATION LIGHT GREEN GMC ----------	1	
- 44	A-1104	FAIRING-NAVIGATION LIGHT---- GMC ---------- ATTACHING PARTS	1	
- 45	AN507-632R12	SCREW ---------- ---*---	1	
- 46	0523119	DETECTOR-NAVIGATION LIGHT ----------	1	

A---180 SERIAL 30000 THRU 31260
B---180 SERIAL 31261 THRU 18051063
182 SERIAL 33000 & ON
C---180 SERIAL 30000 THRU 32661
182 SERIAL 33000 THRU 33842
D---180 SERIAL 32662 THRU 50452
182 SERIAL 33000 THRU 51837
E---180 SERIAL 30000 THRU 18051063
F---180 SERIAL 50453 THRU 18051063
182 SERIAL 51838 & ON
G---180 SERIAL 30000 THRU 50661
182 SERIAL 33000 THRU 52358
NOTE. FOR ACCESSORY KIT LISTINGS REFER TO
PAGES 372 THRU 374B

FIGURE AND INDEX NO.	PART NUMBER		DESCRIPTION	UNITS PER ASSY	USABLE ON CODE
			1 2 3 4 5 6 7		
1A-			WING ASSEMBLY-COMPLETE LH	NP	A
			WING ASSEMBLY-COMPLETE LH EXTENDED RANGE	NP	A
			WING ASSEMBLY-COMPLETE RH	NP	A
			WING ASSEMBLY-COMPLETE RH EXTENDED RANGE	NP	A
			ATTACHING PARTS		
- 1	AN8-23A		BOLT	1	
- 2	AN960-816		WASHER	3	
- 3	MS20364-820C		NUT	1	
- 4	AN7-24A		BOLT	1	
- 5	AN960-716		WASHER	3	
- 6	0512123		BUSHING	2	
- 7	MS20364-720C		NUT	1	
			---*---		
- 8			AILERON INSTALLLATION-----SEE FIGURE 7	1	
- 9			FLAP INSTALLATION SEE FIGURE 8	1	
- 10			TANK INSTALLATION-FUEL SEE FIGURE 6A	1	
- 11	S-225-4F		PLATE-INSPECTION	7	
	S-225-4F	*	PLATE-INSPECTION	6	
			ATTACHING PARTS		
	S-1021Z-8-8		SCREW	3	
			---*---		
- 12	S-225-5		PLATE-INSPECTION	2	
			ATTACHING PARTS		
	S-1021Z-8-8		SCREW	3	
			---*---		
- 13	0511062-4		WING UNIT-STALL WARNING LH WING ONLY	1	
	0511062-5		WING UNIT-STALL WARNING HEATED LH WING ONLY	1	
			ATTACHING PARTS		
	S-1021Z-8-6		SCREW	4	
	NAS395-17-3		NUT TIN A1348-8Z-3	4	
			---*---		
	0792000-23		STRUCTURE ASSEMBLY-WING LH---- SEE FIGURE 2A	1	
	1220003-201		STRUCTURE ASSEMBLY-WING LH---- EXTENDED RANGE SEE FIGURE 2B	1	
	0792000-22		STRUCTURE ASSEMBLY-WING RH---- SEE FIGURE 2A	1	
	1220004-202		STRUCTURE ASSEMBLY-WING RH EXTENDED RANGE SEE FIGURE 2B	1	
	0792000-25		STRUCTURE ASSEMBLY-WING LH CORROSION PROOF SEE FIGURE 2A	1	
	0792000-24		STRUCTURE ASSEMBLY-WING RH CORROSION PROOF SEE FIGURE 2A	1	
- 14	0720002-9		FAIRING ASSEMBLY-WING LOWER FORWARD LH	1	
	0720002-10		FAIRING ASSEMBLY-WING LOWER FORWARD RH	1	
			ATTACHING PARTS		
- 15	S-1021Z-8-8		SCREW	6	
- 16	S-290D832		WASHER	6	
			---*---		
- 17	0520005-3		RUB STRIP	1	
- 18	0520008		FAIRING ASSEMBLY-WING LOWER AFT LH	1	
	0520008-1		FAIRING ASSEMBLY-WING LOWER AFT RH	1	
			ATTACHING PARTS		
- 19	NAS395-18-3		NUT	2	
- 20	S-1022Z-8-6		SCREW	2	
			---*---		
- 21	S-202RB		MOULDING-RUBBER CHANNEL	AR	
- 22	0523118-1		LIGHT-LANDING LH WING ONLY	2	
			ATTACHING PARTS		
- 23	0423542-6		BRACKET ASSEMBLY	2	
- 24	AN515-8R24		SCREW	8	
- 25	0713124-1		SPRING	8	
			---*---		
- 26	AN515-8R7		SCREW-GROUNDING LH WING ONLY	1	
- 27	MS20365-832C		NUT-GROUNDING LH WING ONLY	1	
- 28	0722100-4		WINDOW-LANDING LIGHT LH WING ONLY	1	
			ATTACHING PARTS		
- 29	0722100-3		RETAINER-WINDOW	1	
- 30	S-1022Z-8-8		SCREW	14	
			---*---		
- 31	0423006-21		LIGHT ASSEMBLY-WING NAVIGATION LH	1	
	0423006-22		LIGHT ASSEMBLY-WING NAVIGATION RH	1	
			ATTACHING PARTS		
- 32	S-1021Z-8-6		SCREW	3	
			---*---		
- 33	0423006-25		BASE-LAMP	1	

180 SERIAL 18051064 & ON

S-PART NOS APPEARING ON THIS PAGE ARE CESSNA STANDARD

CONTINUED ON PAGE 4C

Wing

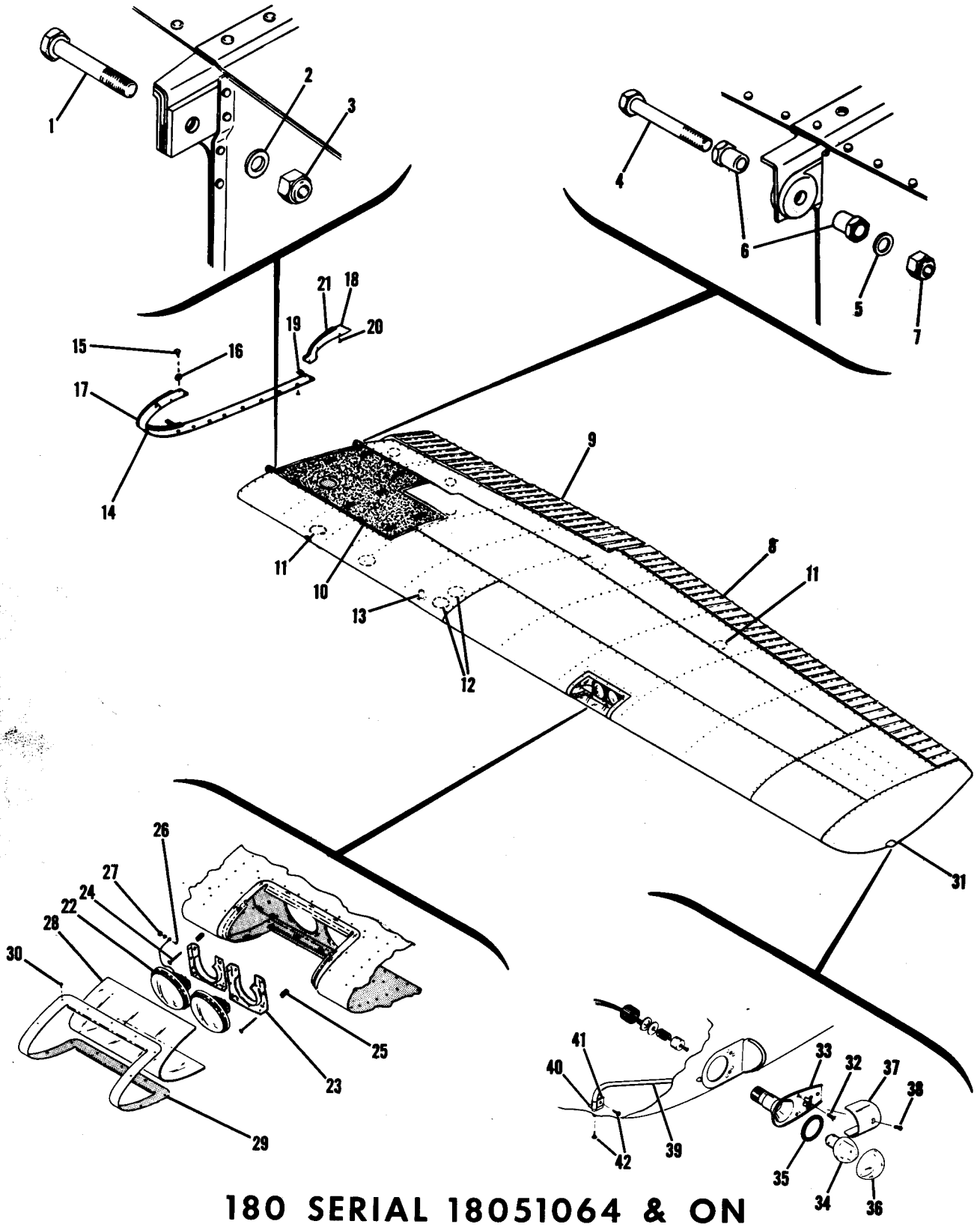

180 SERIAL 18051064 & ON

Figure 1A. Wing Assembly Complete

FIGURE AND INDEX NO.	PART NUMBER	DESCRIPTION 1 2 3 4 5 6 7	UNITS PER ASSY	USABLE ON CODE
1A- 34	A-7512-12	BULB-NAVIGATION LIGHT 12 VOLT	1	
- 35	A-1257A	GASKET-NAVIGATION LIGHT	1	
- 36	A-1280-2	LENS-NAVIGATION LIGHT LH---- RED	1	
	A-1280-3	LENS-NAVIGATION LIGHT RH---- GREEN	1	
- 37	0423007-1	SHIELD-NAVIGATION LIGHT	1	
		ATTACHING PARTS		
- 38	AN507-632R12	SCREW	1	
		---*---		
- 39	0523702-3	DETECTOR-NAVIGATION LIGHT LH	1	
	0523702-4	DETECTOR-NAVIGATION LIGHT RH	1	
		ATTACHING PARTS		
- 40	S-1153-1	BRACKET	1	
- 41	A-3046A-4-92	CLAMP	1	
- 42	S-1021Z-8-8	SCREW	2	
		---*---		
		A---180 SERIAL 18051064 & ON		
		NOTE. * DENOTES PARTS USED ON EXTENDED RANGE WING		
		S-PART NOS APPEARING ON THIS PAGE ARE CESSNA STANDARD		

Wing (Cont)

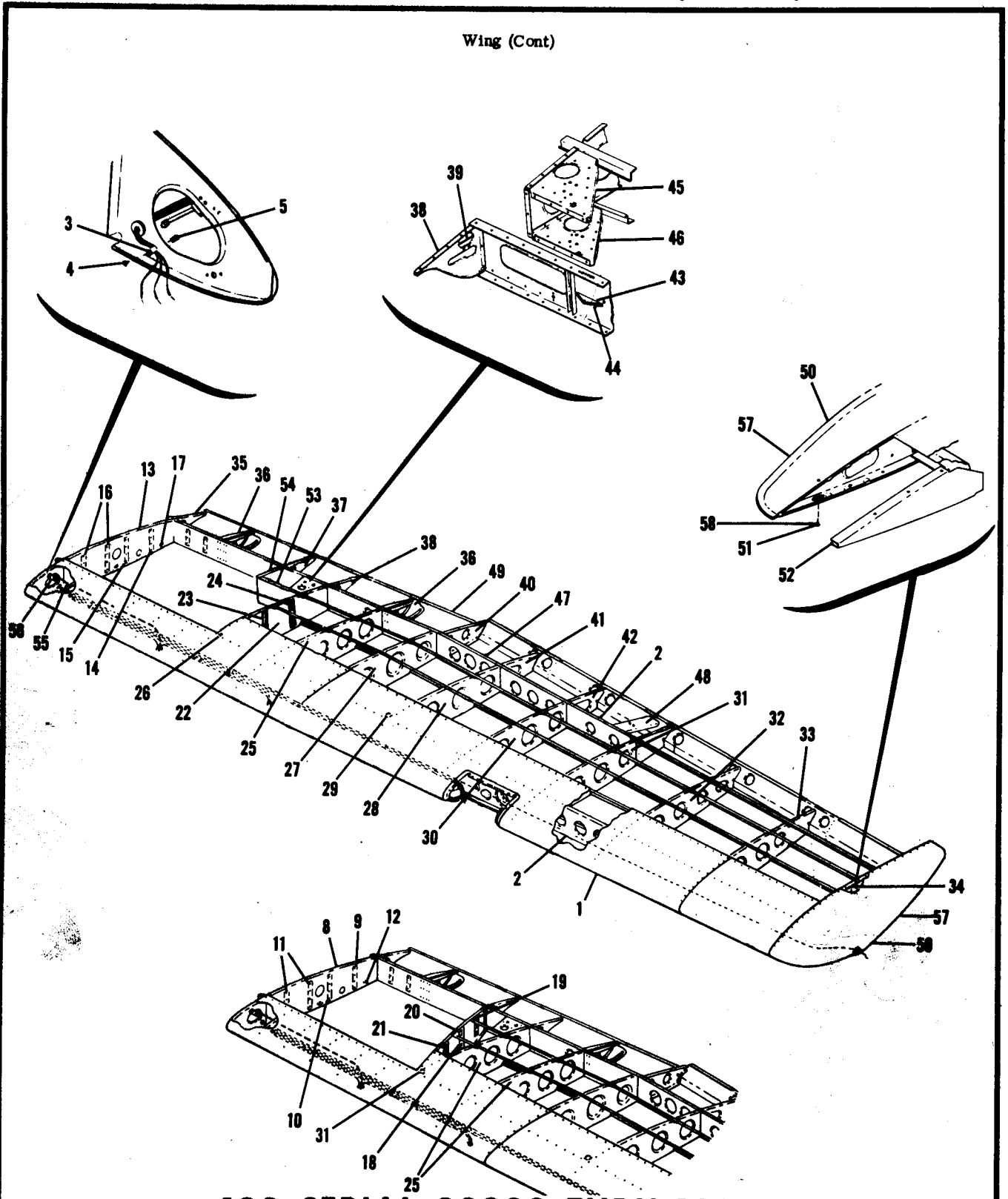

180 SERIAL 30000 THRU 18051063
182 ALL SERIALS

Figure 2. Wing Structure Assembly

FIGURE AND INDEX NO.	PART NUMBER	DESCRIPTION 1 2 3 4 5 6 7	UNITS PER ASSY	USABLE ON CODE
2-	0792000-5	STRUCTURE ASSEMBLY-WING LH	1	A
	0792000-7	STRUCTURE ASSEMBLY-WING LH	1	E
	0792000-11	STRUCTURE ASSEMBLY-WING LH CORROSION PROOF	1	A
	0792000-13	STRUCTURE ASSEMBLY-WING LH CORROSION PROOF	1	E
	0792000-15 #	STRUCTURE ASSEMBLY-WING LH WHEN EXHAUSTED USE 0792000-19	1	J
	0792000-19	STRUCTURE ASSEMBLY-WING LH	1	K
	0792000-17 #	STRUCTURE ASSEMBLY-WING LH CORROSION PROOF WHEN EXHAUSTED USE 0792000-21	1	J
	0792000-21	STRUCTURE ASSEMBLY-WING LH CORROSION PROOF	1	K
	0792000-2	STRUCTURE ASSEMBLY-WING RH	1	A
	0792000-6	STRUCTURE ASSEMBLY-WING RH	1	E
	0792000-10	STRUCTURE ASSEMBLY-WING RH CORROSION PROOF	1	A
	0792000-12	STRUCTURE ASSEMBLY-WING RH CORROSION PROOF	1	E
	0792000-14 #	STRUCTURE ASSEMBLY-WING RH WHEN EXHAUSTED USE 0792000-18	1	J
	0792000-18	STRUCTURE ASSEMBLY-WING RH	1	K
	0792000-16 #	STRUCTURE ASSEMBLY-WING RH CORROSION PROOF WHEN EXHAUSTED USE 0792000-20	1	J
	0792000-20	STRUCTURE ASSEMBLY-WING RH CORROSION PROOF	1	K
- 1		LEADING EDGE ASSEMBLY-WING LH SEE FIGURE 3	1	
		SKINS & STRINGERS INSTALLATION-----SEE FIGURE 5	1	
- 2		SPARS-WING SEE FIGURE 4	1	
- 3	A3046A-6	CLAMP TIN	1	
- 4	S-1021Z-8-8	SCREW CESSNA STANDARD	1	
- 5	NAS446-4-3	NUT TIN A1778-8Z-3	1	
- 6		DELETED, REPLACED BY -55 BELOW		
- 7		DELETED, REPLACED BY -56 BELOW		
	0721100-1	RIB ASSEMBLY-ROOT LH	1	A
	0721100-2	RIB ASSEMBLY-ROOT RH	1	A
- 8	0721100-3	RIB-WING ROOT LH	1	
	0721100-4	RIB-WING ROOT RH	1	
- 9	0721100-5	ANGLE-STIFFENER	1	
- 10	0721100-6	ANGLE-STIFFENER	1	
- 11	0721100-7	ANGLE-STIFFENER	2	
- 12	NAS444-14	NUTPLATE TIN A6162-8Z-3	5	
	0721100-17	RIB ASSEMBLY-WING ROOT LH	1	B
	0721100-18	RIB ASSEMBLY-WING ROOT RH	1	B
- 13	0721100-19	RIB-WING ROOT LH	1	
	0721100-20	RIB-WING ROOT RH	1	
- 14	0721100-5	ANGLE-STIFFENER	1	
- 15	0721100-6	ANGLE-STIFFENER	1	
- 16	0721100-7	ANGLE-STIFFENER	2	
- 17	NAS444-14	NUTPLATE TIN A6162-8Z-3	5	
	0721100-13	RIB ASSEMBLY-WING FUEL BAY LH	1	A
	0721100-10	RIB ASSEMBLY-WING FUEL BAY RH	1	A
- 18	0721100-14	RIB-WING FUEL BAY LH	1	
	0721100-12	RIB-WING FUEL BAY RH	1	
- 19	0721100-5	ANGLE-STIFFENER	1	
- 20	0721100-6	ANGLE-STIFFENER	1	
- 21	0721100-7	ANGLE-STIFFENER	1	
	0721111-1	RIB ASSEMBLY-WING FUEL BAY LH	1	B
	0721111-2	RIB ASSEMBLY-WING FUEL BAY RH	1	B
- 22	0721111-7	RIB-WING FUEL BAY LH	1	
	0721111-8	RIB-WING FUEL BAY RH	1	
- 23	0721100-7	ANGLE-STIFFENER	2	
- 24	0721100-6	ANGLE-STIFFENER	1	
- 25	0523509	RIB-CENTER STA 85.625 & 71.355	1	C
	0523509-1	RIB-CENTER STA 71.355 ONLY	1	D
- 26	0523517-4	SPACER-FORWARD STA 71.375	1	A
- 27	0523510	RIB-CENTER WING LH STA 100.0	1	
	0523510-1	RIB-CENTER WING RH STA 100.0	1	
- 28	0523511-7	RIB-CENTER STA 118.0	1	
- 29	0523511-6	SPACER	1	
- 30	0523512-3	RIB-CENTER STA 136.0	1	
- 31	0523513-3	RIB-CENTER WING LH STA 154.0	1	
	0523513-6	RIB-CENTER WING RH STA 154.0	1	
- 32	0523514-3	RIB-CENTER STA 172.0	1	
- 33	0523515-3	RIB-CENTER STA 190.0	1	
- 34	0720608-7	RIB ASSEMBLY-CENTER STA 208.0	1	
	NAS444-4	NUTPLATE TIN A6191-8Z-3	10	

180 SERIAL 30000 THRU 18051063

182 ALL SERIALS

CONTINUED ON PAGES 6 & 7

FIGURE AND INDEX NO.	PART NUMBER	DESCRIPTION 1 2 3 4 5 6 7	UNITS PER ASSY	USABLE ON CODE
2- 35	0523232	RIB-TRAILING EDGE ROOT STA 23.625	1	
- 36	1221010-7	RIB ASSEMBLY-FLAP TRACK STA 39.0 & 85.875	2	
	1221010-5	BRACKET-LH	1	
	1221010-6	BRACKET RH	1	
- 37	0523233-2	RIB-TRAILING EDGE STA 56.531	1	
- 38	0523233	RIB ASSEMBLY-TRAILING EDGE---- STA 71.375	1	
- 39	0523233-3	RUB STRIP	1	
- 40	0523230	RIB ASSEMBLY-TRAILING EDGE WING LH STA 100.5	1	
	0523230-1	RIB ASSEMBLY-TRAILING EDGE WING RH STA 100.5	1	
	0523230-4	ANGLE-WING LH	1	
	0523230-5	ANGLE-WING RH	1	
- 41	0523511-4	RIB-TRAILING EDGE STA 118.0	1	
- 42	0523512-4	RIB-TRAILING EDGE STA 136.0	1	
- 43	0523407	BRACKET-FLAP PULLEY UPPER	1	
- 44	0523407-1	BRACKET-FLAP PULLEY LOWER	1	
- 45	0523539-2	BRACKET-FLAP BELLCRANK SUPPORT UPPER LH	1	A
	0523539-3	BRACKET-FLAP BELLCRANK SUPPORT UPPER RH	1	A
	0721112-3	BRACKET-FLAP BELLCRANK SUPPORT UPPER LH	1	B
	0721112-4	BRACKET-FLAP BELLCRANK SUPPORT UPPER RH	1	B
- 46	0523539-4	BRACKET-FLAP BELLCRANK SUPPORT LOWER LH	1	A
	0523539-5	BRACKET-FLAP BELLCRANK SUPPORT LOWER RH	1	A
	0721112-1	BRACKET-FLAP BELLCRANK SUPPORT LOWER LH	1	B
	0721112-2	BRACKET-FLAP BELLCRANK SUPPORT LOWER RH	1	B
- 47	0523408	BRACKET-AILERON PULLEY	1	
- 48	0523219-2	CHANNEL-AILERON BELLCRANK SUPPORT UPPER LH	1	
	0523219-3	CHANNEL-AILERON BELLCRANK SUPPORT UPPER RH	1	
	0523219-4	CHANNEL-AILERON BELLCRANK SUPPORT LOWER LH	1	
	0523219-5	CHANNEL-AILERON BELLCRANK SUPPORT LOWER RH	1	
- 49	0720005-1	STIFFENER-TRAILING EDGE INBOARD	1	
- 50	0523700	TIP ASSEMBLY-WING	1	
		ATTACHING PARTS		
- 51	S-1021Z-8-8	SCREW CESSNA STANDARD	10	
		---*---		
- 52	0721107-1	FAIRING-RIB LH STA 208.0	1	
	0721107-2	FAIRING-RIB RH STA 208.0	1	
- 53	0721111-5	BULKHEAD ASSEMBLY	1	B
- 54	0721111-3	RIB-WING LH-----STA 56.531	1	B
	0721111-4	RIB-WING RH-----STA 56.531	1	B

CONTINUED ON PAGE 7

FIGURE AND INDEX NO.	PART NUMBER	DESCRIPTION 1 2 3 4 5 6 7	UNITS PER ASSY	USABLE ON CODE
2- 55	0500106-119	LINE-PITOT LH WING ONLY	1	G
		TUBE ASSEMBLY-PITOT LH WING ONLY	1	H
		ATTACHING PARTS		
- 56	A2980A-4-27	CLAMP TIN	1	
	AN515-6R8	SCREW	1	
	MS20365-632C	NUT	1	
		---*---	1	
	S-1071-1	TUBE-POLYETHYLENE 52.00 INCHES LONG BULK ITEM	AR	H
		CESSNA STANDARD		
	S-1131-1	INSERT-----IB		
	S-1130-1	NUT	2	H
- 57	0523701-4	TIP ASSEMBLY-WING #	2	H
		ATTACHING PARTS	2	
- 58	S-1021Z-8-8	SCREW	10	
	NAS444-4	NUTPLATE	2	

A---180 SERIAL 30000 THRU 32661
182 SERIAL 33000 THRU 33842
B---180 SERIAL 32662 THRU 18051063
182 SERIAL 33843 & ON
C---USE ON ALL SERIALS EXCEPT AT 180 & 182 STATIONS 71.355 FROM 180 SERIAL 32538 & ON AND 182 SERIAL 33752 & ON
D---180 SERIAL 32583 THRU 18051063
182 SERIAL 33752 & ON
E---180 SERIAL 32662 THRU 50448
182 SERIAL 33843 THRU 51825
F---180 SERIAL 50449 THRU 18051063
182 SERIAL 51826 & ON
G---180 SERIAL 30000 THRU 50675 & 50677 THRU 50701
182 SERIAL 33000 THRU 52446 & 52448 THRU 52522
H---180 SERIAL 50676 & 50702 THRU SR3617
182 SERIAL 52447 & 52523 & ON

NOTE. THIS SPARE INCLUDES ALL ELECTRICAL WIRING NECESSARY FOR INSTALLATION

NOTE. # THE METAL WING TIP IS INCLUDED IN THIS ASSEMBLY

S-PART NOS APPEARING ON THIS PAGE ARE CESSNA STANDARD

Wing (Cont)

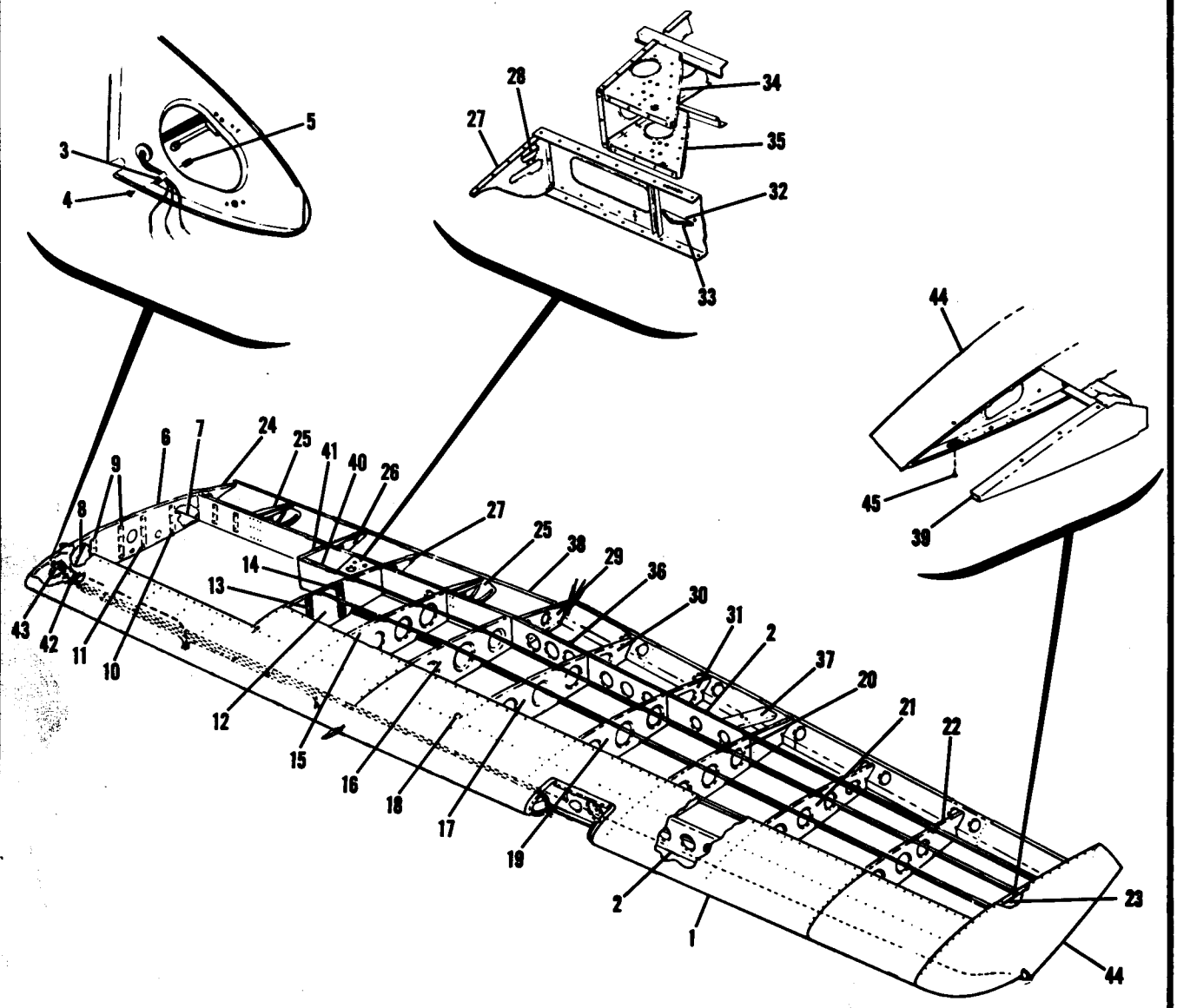

180 SERIAL 18051064 & ON

Figure 2A. Wing Structure Assembly

FIGURE AND INDEX NO.	PART NUMBER	DESCRIPTION 1 2 3 4 5 6 7	UNITS PER ASSY	USABLE ON CODE
2A-	0792000-23	STRUCTURE ASSEMBLY-WING LH	1	A
	0792000-22	STRUCTURE ASSEMBLY-WING RH	1	A
	0792000-25	STRUCTURE ASSEMBLY-WING LH CORROSION PROOF	1	A
	0792000-24	STRUCTURE ASSEMBLY-WING RH CORROSION PROOF	1	A
- 1		LEADING EDGE ASSEMBLIES-WING SEE FIGURE 3	1	
- 2		SKINS & STRINGERS INSTALLATION-----SEE FIGURE 5	1	
- 3	A-3046A-6	SPARS-WING SEE FIGURE 4	1	
- 4	S-1021Z-8-8	CLAMP TIN	1	
- 5	NAS446-4-3	SCREW CESSNA STANDARD	1	
	0721100-23	NUT TIN A1778-8Z-3	1	
	0721100-24	RIB ASSEMBLY-WING ROOT LH	1	
- 6	0721100-25	RIB ASSEMBLY-WING ROOT RH	1	
	0721100-26	RIB ASSEMBLY-WING ROOT LH	1	
- 7	1221101-1	RIB ASSEMBLY-WING ROOT RH	1	
	1221101-2	REINFORCEMENT-ROOT RIB LH	1	
- 8	0721116-1	REINFORCEMENT-ROOT RIB RH	1	
	0721116-2	REINFORCEMENT-ROOT RIB LH	1	
- 9	0721100-7	REINFORCEMENT-ROOT RIB RH	1	
- 10	0721100-6	ANGLE-STIFFENER	2	
- 11	0721100-5	ANGLE-STIFFENER	1	
	0721111-1	ANGLE-STIFFENER	1	
	0721111-16	RIB ASSEMBLY-WING FUEL BAY LH	1	
- 12	0721111-7	RIB ASSEMBLY-WING FUEL BAY RH	1	
	0721111-8	RIB-WING FUEL BAY LH	1	
- 13	0721100-7	RIB-WING FUEL BAY RH	1	
- 14	0721100-6	ANGLE-STIFFENER	1	
- 15	0523509	ANGLE-STIFFENER	2	
- 16	0523510	RIB-CENTER STA 85.625	1	
	0523510-1	RIB-CENTER LH STA 100.00	1	
- 17	0523511-7	RIB-CENTER RH STA 100.00	1	
- 18	0523511-6	RIB-CENTER STA 118.00	1	
- 19	0523512-3	SPACER	1	
- 20	0523513-3	RIB-CENTER STA 136.00	1	
	0523513-6	RIB-CENTER LH STA 154.00	1	
- 21	0523514-3	RIB-CENTER RH STA 154.00	1	
- 22	0523515-3	RIB-CENTER STA 172.00	1	
- 23	0720608-7	RIB-CENTER STA 190.00	1	
	NAS444-4	RIB ASSEMBLY-CENTER STA 208.00	1	
- 24	0523232	NUTPLATE TIN A6191-8Z-3	10	
- 25	1221010-7	RIB-TRAILING EDGE ROOT STA 23.625	1	
	1221010-5	RIB ASSEMBLY-FLAP TRACK STA 39.00 & 85.875	2	
	1221010-6	BRACKET-LH	1	
- 26	0523233-2	BRACKET-RH	1	
- 27	0523233	RIB-TRAILING EDGE STA 56.531	1	
- 28	0523233-3	RIB ASSEMBLY-TRAILING EDGE---- STA 71.375	1	
- 29	0523230	RUB STRIP	1	
	0523230-1	RIB ASSEMBLY-TRAILING EDGE LH STA 100.5	1	
	0523230-4	RIB ASSEMBLY-TRAILING EDGE RH STA 100.5	1	
	0523230-5	ANGLE-LH	1	
- 30	0523511-4	ANGLE-RH	1	
- 31	0523512-4	RIB-TRAILING EDGE STA 118.00	1	
- 32	0523407	RIB-TRAILING EDGE STA 136.00	1	
- 33	0523407-1	BRACKET-FLAP PULLEY UPPER	1	
- 34	0721112-3	BRACKET-FLAP PULLEY LOWER	1	
	0721112-4	BRACKET-FLAP BELLCRANK SUPPORT UPPER LH	1	
- 35	0721112-1	BRACKET-FLAP BELLCRANK SUPPORT UPPER RH	1	
	0721112-2	BRACKET-FLAP BELLCRANK SUPPORT LOWER LH	1	
- 36	0523408	BRACKET-FLAP BELLCRANK SUPPORT LOWER RH	1	
- 37	0523219-2	BRACKET-AILERON PULLEY	1	
	0523219-3	CHANNEL-AILERON BELLCRANK SUPPORT UPPER LH	1	
	0523219-4	CHANNEL-AILERON BELLCRANK SUPPORT UPPER RH	1	
	0523219-5	CHANNEL-AILERON BELLCRANK SUPPORT LOWER LH	1	
- 38	0752005-1	CHANNEL-AILERON BELLCRANK SUPPORT LOWER RH	1	
- 39	0721107-1	STIFFENER-TRAILING EDGE INBOARD	1	
	0721107-2	FAIRING-RIB LH STA 208.00	1	
- 40	0721111-5	FAIRING-RIB RH STA 208.00	1	
- 41	0721111-3	BULKHEAD ASSEMBLY	1	
	0721111-4	RIB-LH-----STA 56.531	1	
		RIB-RH-----STA 56.531	1	

180 SERIAL 18051064 & ON

CONTINUED ON PAGE 7C

FIGURE AND INDEX NO.	PART NUMBER	DESCRIPTION 1 2 3 4 5 6 7	UNITS PER ASSY	USABLE ON CODE
2A- 42		TUBE ASSEMBLY-PITOT LH WING ONLY	1	
		ATTACHING PARTS		
- 43	A2980A-4-27	CLAMP TIN	1	
	AN515-6R8	SCREW	1	
	MS20365-632C	NUT	1	
		---*---		
	S-1071-1	TUBE-POLYETHYLENE 52 IN. LG. BULK ITEM	AR	
		REF S-1071-1-52.0		
	S-1131-1	INSERT	2	
	S-1130-1	NUT	2	
- 44	0523701-4	TIP ASSEMBLY-WING	2	
		ATTACHING PARTS		
- 45	S-1021Z-8-8	SCREW	10	
		---*---		
	NAS444-4	NUTPLATE TIN A6191-8Z-3	2	

A---180 SERIAL 18051064 & ON

NOTE. WING STRUCTURE ASSEMBLIES INCLUDE
ALL WIRING NECESSARY FOR INSTALLATION
S-PART NOS APPEARING ON THIS PAGE ARE CESSNA STANDARD

FIGURE AND INDEX NO.	PART NUMBER	DESCRIPTION 1 2 3 4 5 6 7	UNITS PER ASSY	USABLE ON CODE
28-	1220003-201	STRUCTURE ASSEMBLY-WING LH EXTENDED RANGE	1	A
	1220004-202	STRUCTURE ASSEMBLY-WING RH EXTENDED RANGE	1	A
- 1		LEADING EDGE ASSEMBLIES-WING SEE FIGURE 3A	1	
		SKINS & STRINGERS INSTALLATION-----SEE FIGURE 5A	1	
- 2		SPAR ASSEMBLIES SEE FIGURE 4	1	
- 3	S-1131-1	INSERT	2	
	S-1130-1	NUT	1	
	S-1132-1	UNION	1	
	S-1071-1	TUBE-52.0 IN. LG. BULK ITEM REF S-1071-1-52	1	
		ATTACHING PARTS		
- 4	A2980A-4-27	CLAMP	1	
	S-1021Z-8-8	SCREW	1	
	NAS395-16-3	NUT	1	
		---*---		
- 5	MS21919DG6	CLAMP-LH	1	
	S-1155-3	PLASTIC CLAMP-RH-----HLB1	1	
		ATTACHING PARTS		
- 6	S-1021Z-8-8	SCREW	1	
- 7	NAS446-4-3	NUT	1	
		---*---		
- 8	0721100-23	RIB ASSEMBLY-ROOT LH	1	
	0721100-24	RIB ASSEMBLY-ROOT RH	1	
- 9	0721100-25	RIB-ROOT LH	1	
	0721100-26	RIB-ROOT RH	1	
- 10	1221101-1	REINFORCEMENT-ROOT RIB LH	1	
	1221101-2	REINFORCEMENT-ROOT RIB RH	1	
- 11	0721116-1	REINFORCEMENT-ROOT RIB LH	1	
	0721116-2	REINFORCEMENT-ROOT RIB RH	1	
- 12	0721100-7	ANGLE-STIFFENER	2	
	0721100-6	ANGLE-STIFFENER	1	
	0721100-5	ANGLE-STIFFENER	1	
- 13	1220019-9	RIB-LH	1	
	1220019-10	RIB-RH	1	
- 14	1220019-1	RIB ASSEMBLY-LH STA 85.625	1	
	1220019-2	RIB ASSEMBLY-RH STA 85.625	1	
- 15	1220019-3	RIB-LH STA 85.625	1	
	1220019-4	RIB-RH STA 85.625	1	
- 16	0721100-7	ANGLE-STIFFENER	2	
- 17	0721100-6	ANGLE-STIFFENER	1	
- 18		DELETED, NEVER USED		
- 19	0523510	RIB-CENTER WING LH STA 100.00	1	
	0523510-1	RIB-CENTER WING RH STA 100.00	1	
- 20	0523511-8	RIB-CENTER STA 118.00	1	
- 21	0523511-6	SPACER	1	
- 22	0523512-7	RIB-CENTER STA 136.00	1	
- 23	0523513-7	RIB-CENTER WING LH STA 154.00	1	
	0523513-8	RIB-CENTER WING RH STA 154.00	1	
- 24	0720607-1	RIB-CENTER STA 172.00	1	
- 25	0720607-2	RIB-CENTER STA 190.00	1	
- 26	0720608-2	RIB ASSEMBLY-NOSE STA 208.00	1	
	MS20230A2	GROMMET	1	
	0720608-7	RIB ASSEMBLY-TRAILING EDGE---- STA 208.00	1	
	NAS444-4-3	NUTPLATE	10	
- 27	NAS395-14-3	NUT	3	
- 28	AN6328-8Z-3	NUT	1	
- 29	0523232	RIB-TRAILING EDGE ROOT STA 23.625	1	
- 30	1221010-7	RIB ASSEMBLY-FLAP TRACK STA 39.00 & 85.875	2	
	1221010-5	BRACKET	1	
	1221010-6	BRACKET	1	
- 31	0523233-6	RIB-TRAILING EDGE STA 56.415	1	
- 32	0523233-7	RIB ASSEMBLY-TRAILING EDGE---- STA 71.977	1	
- 33	0523233-3	RUB STRIP	1	
- 34	0523230	RIB ASSEMBLY-TRAILING EDGE WING LH STA 100.5	1	
	0523230-1	RIB ASSEMBLY-TRAILING EDGE WING RH STA 100.5	1	
	0523230-4	ANGLE-WING LH	1	
	0523230-5	ANGLE-WING RH	1	
- 35	0523511-4	RIB-TRAILING EDGE STA 118.00	1	

180 SERIAL 18051064 & ON

S-PART NOS APPEARING ON THIS PAGE ARE CESSNA STANDARD

CONTINUED ON PAGES 7E & 7F

Wing (Cont)

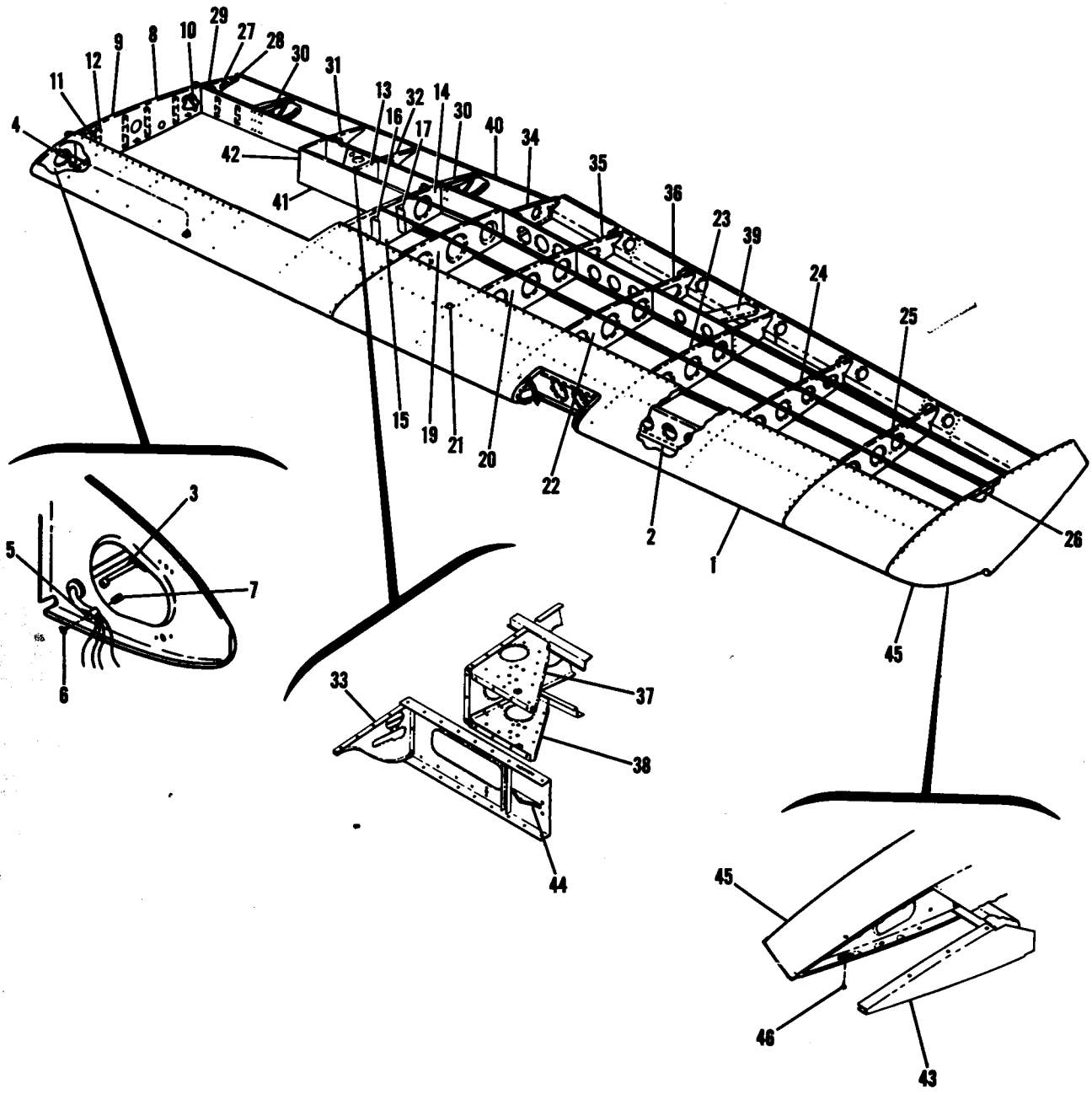

180 SERIAL 18051064 & ON

Figure 2B. Wing Structure Assembly Extended Range

	PART NUMBER	DESCRIPTION 1 2 3 4 5 6 7	UNITS PER ASSY	USABLE ON CODE
28	0523512-4	RIB-TRAILING EDGE STA 136.00	1	
	0721112-3	BRACKET-FLAP BELLCRANK UPPER LH	1	
	0721112-4	BRACKET-FLAP BELLCRANK UPPER RH	1	
8	0721112-1	BRACKET-FLAP BELLCRANK LOWER LH	1	
	0721112-2	BRACKET-FLAP BELLCRANK LOWER RH	1	
39	0523219-2	CHANNEL-AILERON BELLCRANK SUPPORT UPPER LH	1	
	0523219-3	CHANNEL-AILERON BELLCRANK SUPPORT UPPER RH	1	
	0523219-4	CHANNEL-AILERON BELLCRANK SUPPORT LOWER LH	1	
	0523219-5	CHANNEL-AILERON BELLCRANK SUPPORT LOWER RH	1	
40	0720005-1	STIFFENER-TRAILING EDGE INBOARD	1	
- 41	1220019-5	BULKHEAD ASSEMBLY-LH	1	
	1220019-6	BULKHEAD ASSEMBLY-RH	1	
- 42	0721111-3	RIB-WING LH-----STA 56.415	1	
	0721111-4	RIB-WING RH-----STA 56.415	1	
- 43	0721107-1	FAIRING LH	1	
	0721107-2	FAIRING RH	1	
- 44	0760618-2	BRACKET ASSEMBLY-PULLEY LOWER	1	
	0760618-1	BRACKET ASSEMBLY-PULLEY UPPER	1	
- 45	0523701-4	TIP ASSEMBLY-WING	2	
		ATTACHING PARTS		
- 46	S-1021Z-8-8	SCREW CESSNA STANDARD	10	
		---*---		

A---180 SERIAL 18051064 & ON

NOTE. WING STRUCTURE ASSEMBLIES INCLUDE ALL WIRING NECESSARY FOR INSTALLATION

Wing (Cont)

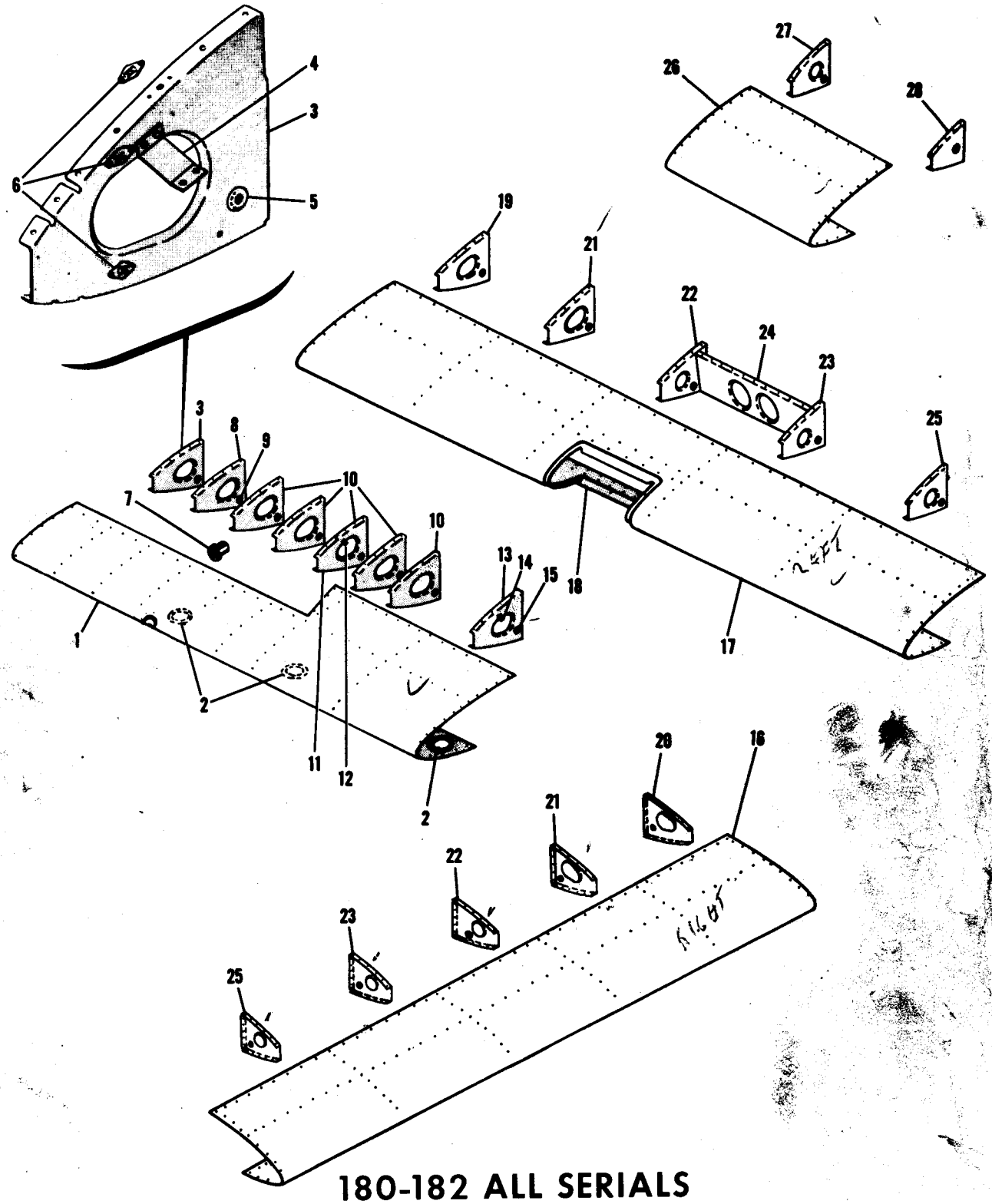

180-182 ALL SERIALS

Figure 3. Wing Leading Edge Assembly

FIGURE AND INDEX NO.	PART NUMBER		DESCRIPTION 1 2 3 4 5 6 7	UNITS PER ASSY	USABLE ON CODE
3-	0792000-3	*	LEADING EDGE ASSEMBLY-INBOARD LH-----STA 23.625 TO 100.0 ----	1	A
	0792000-4	*	LEADING EDGE ASSEMBLY-INBOARD RH-----STA 23.625 TO 100.0 ----	1	A
	0792000-9	#	LEADING EDGE ASSEMBLY-INBOARD LH-----STA 23.625 TO 100.0 ----	1	B
	0792000-8	#	LEADING EDGE ASSEMBLY-INBOARD RH-----STA 23.625 TO 100.0 ----	1	B
- 1	0720001-33		SKIN-LEADING EDGE INBOARD LH. STA 23.625 TO 100.0 ----	1	A
	0720001-38		SKIN-LEADING EDGE INBOARD RH. STA 23.625 TO 100.0 ----	1	A
	0720001-43		SKIN-LEADING EDGE INBOARD LH STA 23.625 TO 100.0 ----	1	B
	0720001-42		SKIN-LEADING EDGE INBOARD RH STA 23.625 TO 100.0 ----	1	B
- 2	S-226-2		DOUBLER-INSPECTION OPENING---- CESSNA STANDARD ----	3	
	NAS444-14		NUT TIN A6162-8Z-3 ----	9	
- 3	0523107-2		RIB ASSEMBLY-LEADING EDGE NOSE LH STA 23.625 ----	1	
	0523107-3		RIB ASSEMBLY-LEADING EDGE NOSE RH STA 23.625 ----	1	
- 4	0422291		BRACKET-LH WING ONLY ----	1	
- 5	MS20230A2		GROMMET ----	1	
- 6	NAS444-14		NUTPLATE TIN A6162-8Z-3 ----	2	
- 7	0413157		SCOOP-CABIN AIR VENT ----	2	
- 8	0523107		RIB ASSEMBLY-NOSE STA 32.5----	1	
- 9	MS20230A2		GROMMET ----	1	
- 10	0523108		RIB ASSEMBLY-WING NOSE LH ----STA 40.375 48.75 64.5 & 71.97	1	
	0523108		RIB ASSEMBLY-WING NOSE RH ----STA 40.375 48.75 57.125 64.5 & 71.97	4	A
	0523108		RIB ASSEMBLY-WING NOSE LH ----STA 40.375 48.75 & 64.5 ----	5	A
	0523108		RIB ASSEMBLY-WING NOSE RH ----STA 40.375 48.75 57.125 & 64.5	3	B
	0523111-2		RIB ASSEMBLY-NOSE STA 71.97 ----	4	B
	MS20230A2		GROMMET ----	1	B
- 11	0523108-3		RIB ASSEMBLY-WING LEADING EDGE LH STA 57.125 ----	1	B
- 12	0422292		BRACKET-LH WING ONLY ----	1	
	MS20230A2		GROMMET ----	1	
- 13	0523111-2		RIB ASSEMBLY-LEADING EDGE ----STA 85.625----	1	
- 14	0422292		BRACKET-LH WING ONLY ----	1	
- 15	MS20230A2		GROMMET ----	1	
	0720001-51	#	LEADING EDGE ASSEMBLY-WING CENTER LH STA 100.0 TO 190.0	1	
	0720001-54	#	LEADING EDGE ASSEMBLY-WING CENTER RH STA 100.0 TO 190.0	1	
- 16	0720601-14		SKIN-LEADING EDGE RH STA 100.0 TO 190.0 ----	1	
- 17	0720601-205		SKIN ASSEMBLY-LEADING EDGE---- STA 100.0 TO 190.0 ----	1	
- 18	0722100-1		DOUBLER ASSEMBLY-LANDING LIGHT OPENING LH ----	1	
	NAS444-14		NUTPLATE TIN A6162-8Z-3 ----	1	
- 19	0523110-5		RIB ASSEMBLY-WING LEADING EDGE LH STA 100.0 ----	14	
- 20	0523110-2		RIB ASSEMBLY-WING LEADING EDGE RH STA 100.0 ----	1	
	MS20230A2		GROMMET ----	1	
- 21	0523542-1		RIB ASSEMBLY-NOSE STA 118.0 ----	1	
	MS20230A2		GROMMET ----	1	
- 22	0523512-5		RIB ASSEMBLY-NOSE STA 136.0 ----	1	
	MS20230A2		GROMMET ----	1	
- 23	0523513-4		RIB ASSEMBLY-NOSE STA 154.0 ----	1	
	MS20230A2		GROMMET ----	1	
- 24	0523106-4		BRACKET ASSEMBLY-LANDING LIGHT-----LH WING ONLY ----	1	
	NAS680A08		NUTPLATE ----	1	
- 25	0523514-4		RIB ASSEMBLY-NOSE STA 172.0 ----	10	
	MS20230A2		GROMMET ----	1	
	0720001-52	#	LEADING EDGE ASSEMBLY-WING LH ----	1	
	0720001-55	#	LEADING EDGE ASSEMBLY-WING RH ----	1	
- 26	0720601-15		SKIN-WING LH STA 190.0 TO 205.0----	1	
	0720601-16		SKIN-WING RH STA 190.0 TO 205.0----	1	
- 27	0523515-4		RIB ASSEMBLY-NOSE STA 190.0 ----	1	
	MS20230A2		GROMMET ----	1	
- 28	0720608-2		RIB ASSEMBLY-NOSE STA 208.0 ----	1	
	MS20230A2		GROMMET ----	1	

180-182 ALL SERIALS

A---180 SERIAL 30000 THRU 32661
182 SERIAL 33000 THRU 33842
B---180 SERIAL 32662 & ON
182 SERIAL 33843 & ON
*NOTE. WHEN ORDERING PARTS MARKED * FOR 180 AIRPLANES PRIOR TO SERIAL 31621 ALSO ORDER PARTS MARKED * ON FIGURE 84
NOTE. # FOR SERIALS 18051064 & ON THESE PARTS ARE APPLICABLE ONLY TO WING STRUCTURES LISTED ON FIGURE 2A

Wing (Cont)

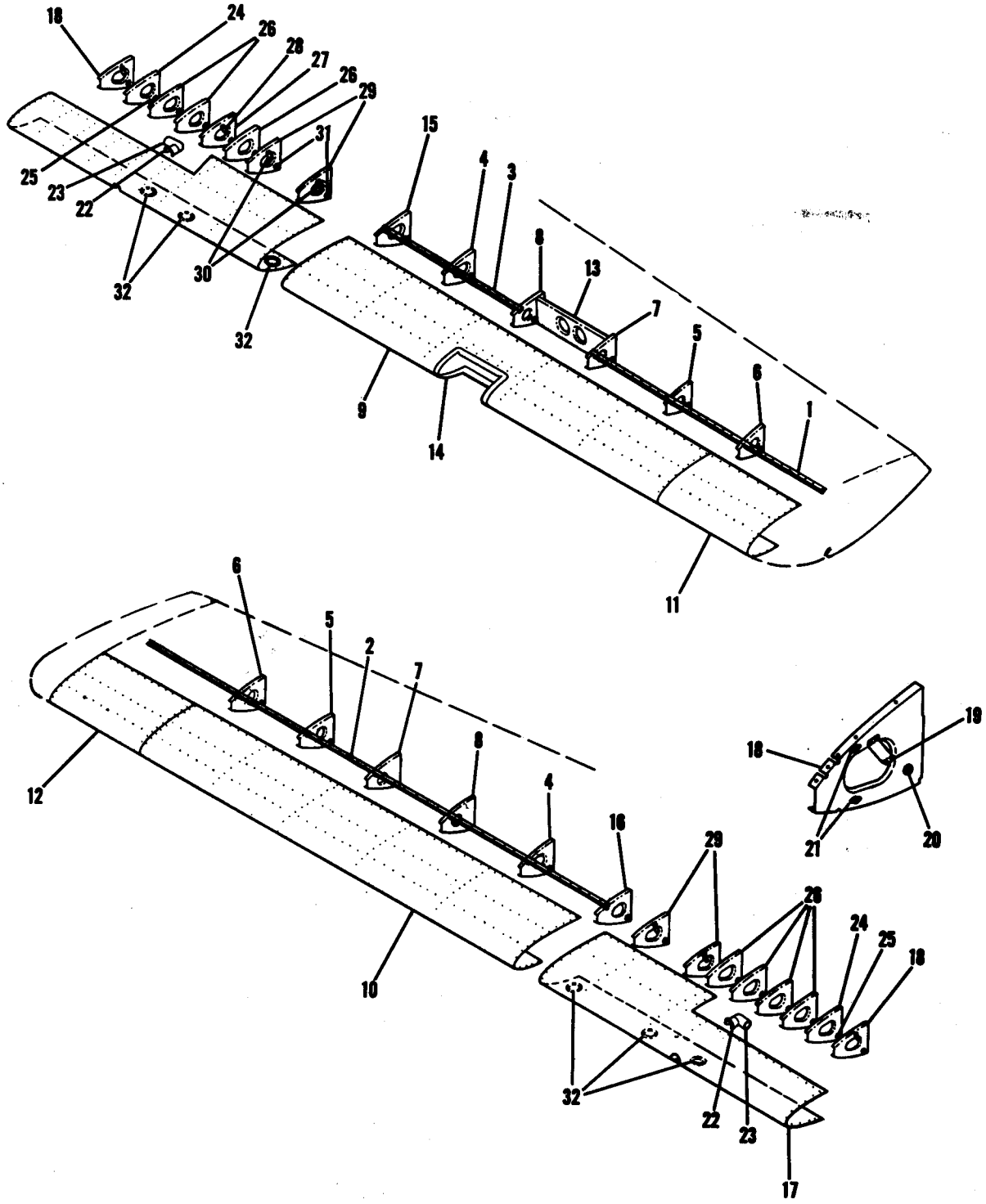

180 SERIAL 18051064 & ON

Figure 3A. Wing Leading Edge Assembly - Extended Range

FIGURE AND INDEX NO.	PART NUMBER	DESCRIPTION 1 2 3 4 5 6 7	UNITS PER ASSY	USABLE ON CODE
3A-		LEADING EDGE ASSEMBLIES-EXTENDED RANGE WING	NP	A
	1220002-37	LEADING EDGE ASSEMBLY-CENTER LH STA 100.0 TO 208.0	1	
	1220002-36	LEADING EDGE ASSEMBLY-CENTER RH STA 100.0 TO 208.0	1	
- 1	0523541-61	STRINGER-LH	1	
- 2	0523541-62	STRINGER-RH	1	
- 3	0523541-63	STRINGER-LH	1	
- 4	0720602-1	RIB ASSEMBLY-NOSE STA 118.00	1	
	MS20230A2	GROMMET	1	
- 5	0720607-3	RIB ASSEMBLY STA 172.00	1	
	MS20230A2	GROMMET	1	
- 6	0720607-4	RIB ASSEMBLY STA 190.00	1	
	MS20230A2	GROMMET	1	
- 7	0720608-3	RIB ASSEMBLY STA 154.00	1	
	MS20230A2	GROMMET	1	
- 8	0720609-1	RIB ASSEMBLY-NOSE STA 136.00	1	
	MS20230A2	GROMMET	1	
- 9	1220002-39	SKIN-LEADING EDGE LH	1	
- 10	1220002-38	SKIN-LEADING EDGE RH	1	
- 11	1220002-41	SKIN-LEADING EDGE LH	1	
- 12	1220002-40	SKIN-LEADING EDGE RH	1	
- 13	0523106-4	BRACKET ASSEMBLY-LANDING LIGHT LH WING ONLY	1	
	NAS680A08	NUTPLATE	1	
- 14	0722100-1	DOUBLER ASSEMBLY-LANDING LIGHT	10	
- 15	0720610-1	RIB ASSEMBLY-NOSE LH STA 100.00	1	
- 16	0720610-2	RIB ASSEMBLY-NOSE RH STA 100.00	1	
	MS20230A2	GROMMET	1	
	1220003-18	LEADING EDGE ASSEMBLY-INBOARD LH	1	
	1220004-18	LEADING EDGE ASSEMBLY-INBOARD RH	1	
- 17	1220003-17	SKIN-LEADING EDGE INBOARD LH	1	
	1220004-17	SKIN-LEADING EDGE INBOARD RH	1	
- 18	0523107-2	RIB ASSEMBLY-LEADING EDGE NOSE LH-----STA 23.625	1	
	0523107-3	RIB ASSEMBLY-LEADING EDGE NOSE RH-----STA 23.625	1	
- 19	0422291	BRACKET-LH WING ONLY	1	
- 20	MS20230A2	GROMMET	1	
- 21	NAS444-14-3	NUTPLATE	2	
- 22	0413157	SCOOP-CABIN AIR VENT	2	
- 23	0450314	FITTING-CABIN AIR VENT	1	
		ATTACHING PARTS	1	
	S-1021Z-8-8	SCREW		
	NAS446-4-3	NUT	1	
		---*---	1	
- 24	0523107	RIB ASSEMBLY-NOSE STA 32.5		
- 25	MS20230A2	GROMMET	1	
- 26	0523108	RIB ASSEMBLY-LH STA 40.375, 48.75, & 64.5	1	
	0523108	RIB ASSEMBLY-RH STA 40.375, 48.75, 57.125, & 64.5	3	
	MS20230A2	GROMMET	4	
- 27	0523108-3	RIB ASSEMBLY-WING LEADING EDGE LH-----STA 57.125	1	
- 28	0422292	BRACKET-LH WING ONLY	1	
	MS20230A2	GROMMET	1	
- 29	0523111-2	RIB ASSEMBLY-NOSE STA 71.977 & 85.625	1	
- 30	0422292	BRACKET	2	
- 31	MS20230A2	GROMMET	1	
- 32	S-226-5F	DOUBLER-INSPECTION OPENING	1	
	A-6162-8Z-3	NUT TIN	3	
			3	

180 SERIAL 18051064 & ON

A---180 SERIAL 18051064 & ON

S-PART NOS APPEARING ON THIS PAGE ARE CESSNA STANDARD

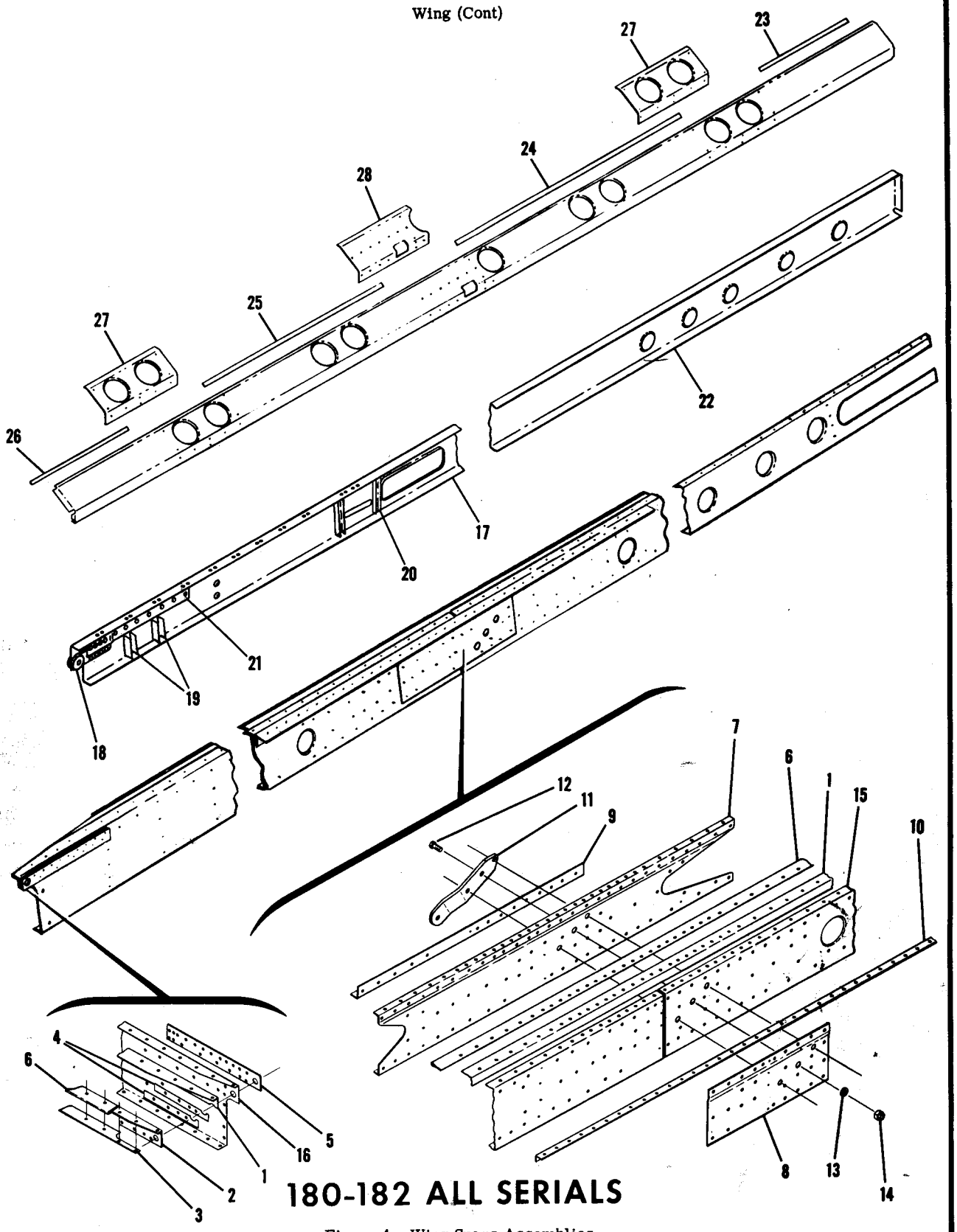

Figure 4. Wing Spars Assemblies

FIGURE AND INDEX NO.	PART NUMBER	DESCRIPTION	UNITS PER ASSY	USABLE ON CODE
		1 2 3 4 5 6 7		
4-	0721400-1	SPAR ASSEMBLY-WING FRONT LH	1	A
	0721400-2	SPAR ASSEMBLY-WING FRONT RH	1	A
	0721400-21	SPAR ASSEMBLY-WING FRONT LH	1	B
	0721400-22	SPAR ASSEMBLY-WING FRONT RH	1	B
- 1	0721400-3	ANGLE-FRONT SPAR CAP LH	1	
	0721400-4	ANGLE-FRONT SPAR CAP RH	1	
- 2	0523309	ANGLE-FRONT SPAR LH	1	
	0523309-1	ANGLE-FRONT SPAR RH	1	
- 3	0721400-10	SPACER-FRONT SPAR	1	
- 4	0721400-9	SPACER-FRONT SPAR	1	
- 5	0523308	PLATE-FRONT SPAR ROOT REINFORCEMENT	2	
- 6	0523315	PLATE-FRONT SPAR CAP LH	1	
	0523315-1	PLATE-FRONT SPAR CAP RH	1	
- 7	0721400-13	CHANNEL-FRONT SPAR SPLICE LH	1	
	0721400-14	CHANNEL-FRONT SPAR SPLICE RH	1	
- 8	0721400-17	PLATE-FRONT SPAR SPLICE CHANNEL LH	1	
	0721400-18	PLATE-FRONT SPAR SPLICE CHANNEL RH	1	
- 9	0523316	ANGLE-FRONT SPAR SPLICE LH	1	
	0523316-1	ANGLE-FRONT SPAR SPLICE RH	1	
- 10	0523321-1	ANGLE-FRONT SPAR FORWARD CAP STRIP LH	1	
	0523321-2	ANGLE-FRONT SPAR FORWARD CAP STRIP RH	1	A
	0523321-3	ANGLE-FRONT SPAR FORWARD CAP STRIP LH	1	A
	0523321-4	ANGLE-FRONT SPAR FORWARD CAP STRIP RH	1	B
- 11	0523306	FITTING-FRONT SPAR STRUT	1	B
		ATTACHING PARTS	1	
- 12	AN5-7A	BOLT	3	
- 13	AN960-516	WASHER	3	
- 14	MS20365-524C	NUT	3	
		---*---		
- 15	0721400-19	CHANNEL-FRONT SPAR OUTBOARD LH	1	
	0721400-20	CHANNEL-FRONT SPAR OUTBOARD RH	1	
- 16	0721400-5	CHANNEL-FRONT SPAR INBOARD LH	1	A
	0721400-6	CHANNEL-FRONT SPAR INBOARD RH	1	A
	0721400-23	CHANNEL-FRONT SPAR INBOARD LH	1	B
	0721400-24	CHANNEL-FRONT SPAR INBOARD RH	1	B
	0523400-55	SPAR ASSEMBLY-WING REAR LH	1	
	0523400-54	SPAR ASSEMBLY-WING REAR RH	1	
- 17	0523400-52	SEGMENT ASSEMBLY-REAR SPAR LH STA 23.0 TO 100.0	1	
	0523400-53	SEGMENT ASSEMBLY-REAR SPAR RH STA 23.0 TO 100.0	1	
- 18	0422229-3	FITTING-WING SPAR REINFORCEMENT	1	
- 19	0523409-1	CHANNEL-REINFORCEMENT	2	
- 20	0523409	CHANNEL-REINFORCEMENT	2	
- 21	0523400-20	ANGLE-REAR SPAR REINFORCEMENT LH	3	
	0523400-21	ANGLE-REAR SPAR REINFORCEMENT RH	1	
- 22	0523406	SEGMENT-REAR SPAR OUTBOARD LH STA 100.0 TO 154.0	1	
	0523406-1	SEGMENT-REAR SPAR OUTBOARD RH STA 100.0 TO 154.0	1	
	0523005-50	SPAR ASSEMBLY-OUTBOARD AUXILLIARY LH	1	
	0523005-51	SPAR ASSEMBLY-OUTBOARD AUXILLIARY RH	1	
- 23	0523813-3	FILLER-TRAILING EDGE	1	
- 24	0523813-2	FILLER-TRAILING EDGE	1	
- 25	0523813-4	FILLER-TRAILING EDGE	1	
- 26	0523813-5	FILLER-TRAILING EDGE	1	
- 27	0523216	REINFORCEMENT	1	
- 28	0523215	REINFORCEMENT-WING LH	2	
	0523215-1	REINFORCEMENT-WING RH	1	

180-182 ALL SERIALS

A---180 SERIAL 30000 THRU 32661
182 SERIAL 33000 THRU 33842
B---180 SERIAL 32662 & ON
182 SERIAL 33843 & ON

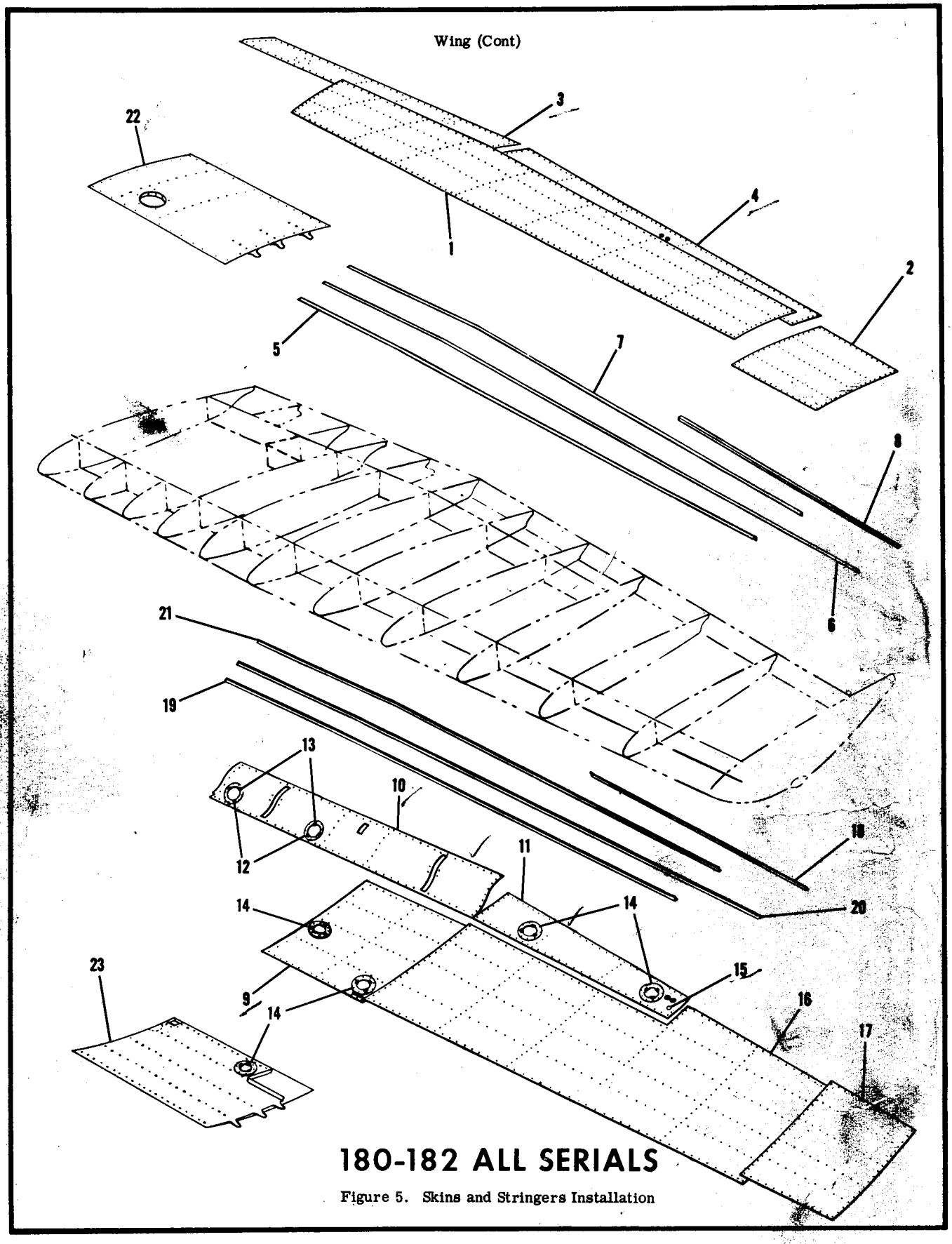

Figure 5. Skins and Stringers Installation

FIGURE AND INDEX NO.	PART NUMBER	DESCRIPTION	UNITS PER ASSY	USABLE ON CODE
		1 2 3 4 5 6 7		
5-	*	SKINS & STRINGERS INSTALLATION LH	NP	
	*	SKINS & STRINGERS INSTALLATION RH	NP	
- 1	0720001-16	SKIN-UPPER STA 56.531 TO 190.0	1	A
	0720001-45	SKIN-UPPER STA 71.375 TO 190.0	1	B
- 2	0720601-17	SKIN-UPPER STA 190.0 TO 208.0	1	
- 3	0720001-5	SKIN-UPPER STA 22.875 TO 100.5	1	A
	0720001-69	SKIN-UPPER STA 22.875 TO 100.5	1	B
- 4	0720601-20	SKIN-UPPER STA 100.5 TO 190.0	1	
- 5	0523541-25	STRINGER-WING UPPER LH	1	A
	0523541-26	STRINGER-WING UPPER RH	1	A
	0523541-43	STRINGER-WING UPPER LH	1	B
	0523541-44	STRINGER-WING UPPER RH	1	B
- 6	0523541-27	STRINGER-WING UPPER LH	1	A
	0523541-28	STRINGER-WING UPPER RH	1	A
	0523541-47	STRINGER-WING UPPER LH	1	B
	0523541-46	STRINGER-WING UPPER RH	1	B
- 7	0523541-29	STRINGER-WING UPPER LH	1	A
	0523541-30	STRINGER-WING UPPER RH	1	A
	0523541-45	STRINGER-WING UPPER LH	1	B
	0523541-48	STRINGER-WING UPPER RH	1	B
- 8	0523003-40	STRINGER-UPPER	1	
- 9	0720001-62	SKIN-WING LOWER LH STA 56.531 TO 100.0	1	A
	0720001-7	SKIN-WING LOWER RH STA 56.531 TO 100.0	1	A
	0720001-66	SKIN-WING LOWER LH STA 71.375 TO 100.0	1	B
	0720001-44	SKIN-WING LOWER RH STA 71.375 TO 100.0	1	B
- 10	0720001-27	SKIN-WING LOWER LH STA 22.875 TO 100.5	1	A
	0720001-8	SKIN-WING LOWER RH STA 22.875 TO 100.5	1	A
	0720001-67	SKIN-WING LOWER LH STA 22.875 TO 100.5	1	B
	0720001-68	SKIN-WING LOWER RH STA 22.875 TO 100.5	1	B
- 11	0720601-24	SKIN-LOWER STA 100.5 TO 154.0	1	
- 12	S-237	DOUBLER-INSPECTION OPENING---- CESSNA STANDARD	2	
- 13	NAS395-14-3	NUT TIN A1274-8Z-3	6	
- 14	S-226-2	DOUBLER-INSPECTION OPENING---- CESSNA STANDARD	5	
	NAS444-14	NUT TIN A6162-8Z-3	3	
- 15	48155	PLUG BUTTON-----UC	1	
- 16	0720001-10	SKIN-LOWER STA 100.0 TO 190.0	1	
- 17	0720601-18	SKIN-LOWER STA 190.0 TO 208.0	1	
- 18	0523003-40	STRINGER-LOWER	1	
- 19	0523541-32	STRINGER-WING LOWER LH	1	A
	0523541-31	STRINGER-WING LOWER RH	1	A
	0523541-50	STRINGER-WING LOWER LH	1	B
	0523541-49	STRINGER-WING LOWER RH	1	B
- 20	0523541-28	STRINGER-WING LOWER LH	1	A
	0523541-27	STRINGER-WING LOWER RH	1	A
	0523541-48	STRINGER-WING LOWER LH	1	B
	0523541-45	STRINGER-WING LOWER RH	1	B
- 21	0523541-30	STRINGER-WING LOWER LH	1	A
	0523541-29	STRINGER-WING LOWER RH	1	A
	0523541-46	STRINGER-WING LOWER LH	1	B
	0523541-47	STRINGER-WING LOWER RH	1	B
- 22	0721200-63	PANEL ASSEMBLY-WING FUEL BAY UPPER COVER LH	1	A
	0721200-2	PANEL ASSEMBLY-WING FUEL BAY UPPER COVER RH	1	A
	NAS444-4	NUTPLATE TIN A6191-8Z-3	7	A
	0721201-3	PANEL ASSEMBLY-WING FUEL BAY UPPER LH	1	D
	0721201-4	PANEL ASSEMBLY-WING FUEL BAY UPPER RH	1	D
	0721201-67	PANEL ASSEMBLY-WING FUEL BAY UPPER RH	1	C
	0721201-51	PANEL ASSEMBLY-WING FUEL BAY UPPER LH	1	C
- 23	0721200-3	PANEL ASSEMBLY-WING FUEL BAY LOWER COVER LH	1	A
	0721200-4	PANEL ASSEMBLY-WING FUEL BAY LOWER COVER RH	1	A
	0721200-51	ANGLE-REINFORCEMENT	1	A
	0721201-1	PANEL ASSEMBLY-WING FUEL BAY LOWER COVER LH	1	B
	0721201-2	PANEL ASSEMBLY-WING FUEL BAY LOWER COVER RH	1	B

180-182 ALL SERIALS

A---180 SERIAL 30000 THRU 32661
182 SERIAL 33000 THRU 33842
B---180 SERIAL 32662 & ON
182 SERIAL 33843 & ON
C---180 SERIAL 50449 & ON
182 SERIAL 51826 & ON
D---180 SERIAL 32662 THRU 50448
182 SERIAL 33843 THRU 51825
NOTE. * FOR SERIAL 18051064 & ON THESE PARTS ARE APPLICABLE ONLY TO WING STRUCTURES LISTED ON FIGURE 2A

Wing (Cont)

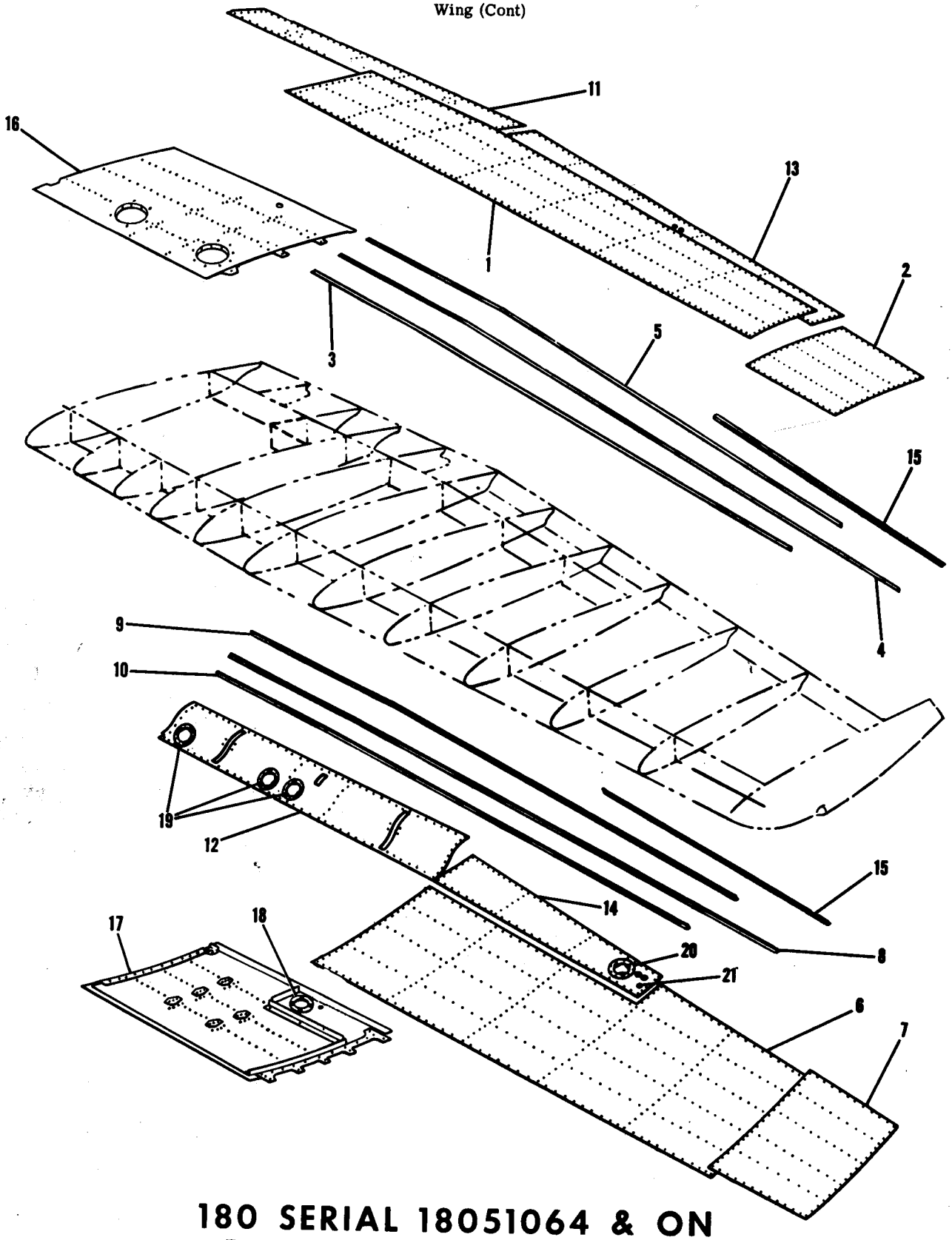

180 SERIAL 18051064 & ON

Figure 5A. Skins & Stringers Installation - Extended Range

FIGURE AND INDEX NO.	PART NUMBER	DESCRIPTION 1 2 3 4 5 6 7	UNITS PER ASSY	USABLE ON CODE
5A-		SKINS & STRINGERS INSTALLATION-EXTENDED RANGE WING LH ----	NP	A
		SKINS & STRINGERS INSTALLATION-EXTENDED RANGE WING RH ----	NP	A
- 1	1220003-15	SKIN-UPPER LH STA 85.625 TO 190.00 ----------	1	
	1220004-15	SKIN-UPPER RH STA 85.625 TO 190.00 ----------	1	
- 2	1220002-21	SKIN-UPPER STA 190.00 TO 208.00----------	1	
- 3	0523541-51	STRINGER-WING UPPER LH ----------	1	
	0523541-52	STRINGER-WING UPPER RH ------180 SERIAL -----	1	
- 4	0523541-53	STRINGER-WING UPPER LH ------	1	
	0523541-54	STRINGER-WING UPPER RH -18051064 & ON	1	
- 5	0523541-59	STRINGER-WING UPPER LH -	1	
	0523541-56	STRINGER-WING UPPER RH ----------	1	
- 6	1220003-16	SKIN-LOWER LH STA 85.625 TO 190.00 ----------	1	
	1220004-16	SKIN-LOWER RH STA 85.625 TO 190.00 ----------	1	
- 7	1220002-22	SKIN-LOWER STA 190.00 TO 208.00----------	1	
- 8	0523541-54	STRINGER-WING LOWER LH ----------	1	
	0523541-53	STRINGER-WING LOWER RH ----------	1	
- 9	0523541-60	STRINGER-WING LOWER LH ----------	1	
	0523541-55	STRINGER-WING LOWER RH ----------	1	
- 10	0523541-58	STRINGER-WING LOWER LH ----------	1	
	0523541-57	STRINGER-WING LOWER RH ----------	1	
- 11	1220002-27	SKIN-UPPER TRAILING EDGE STA 23.625 TO 100.5 ---------	1	
- 12	0720001-67	SKIN-LOWER TRAILING EDGE LH STA 23.625 TO 100.5 ----	1	
	0720001-68	SKIN-LOWER TRAILING EDGE RH STA 23.625 TO 100.5 ----	1	
- 13	1220002-25	SKIN-UPPER TRAILING EDGE STA 100.5 TO 190.00 ---------	1	
- 14	1220002-26	SKIN-LOWER TRAILING EDGE STA 100.5 TO 190.00 ---------	1	
- 15	0523003-40	STRINGER-WING ----------	2	
- 16	1220006-21	PANEL ASSEMBLY-WING FUEL WELL UPPER LH ----------	1	
	1220006-22	PANEL ASSEMBLY-WING FUEL WELL UPPER RH ----------	1	
- 17	1220007-19	PANEL ASSEMBLY-WING FUEL WELL LOWER LH ----------	1	
	1220007-20	PANEL ASSEMBLY-WING FUEL WELL LOWER RH ----------	1	
- 18	S-226-2	DOUBLER-INSPECTION OPENING ----------	1	
- 19	S-1048-2	DOUBLER-INSPECTION OPENING ----------	3	
- 20	S-226-5F	DOUBLER-INSPECTION OPENING ----------	1	
	NAS444-14-3	NUT ----------	3	
- 21	SS48155-K2215	PLUG BUTTON UC----------	1	

A---180 SERIAL 18051064 & ON

S-PART NOS APPEARING ON THIS PAGE ARE CESSNA STANDARD

Wing (Cont)

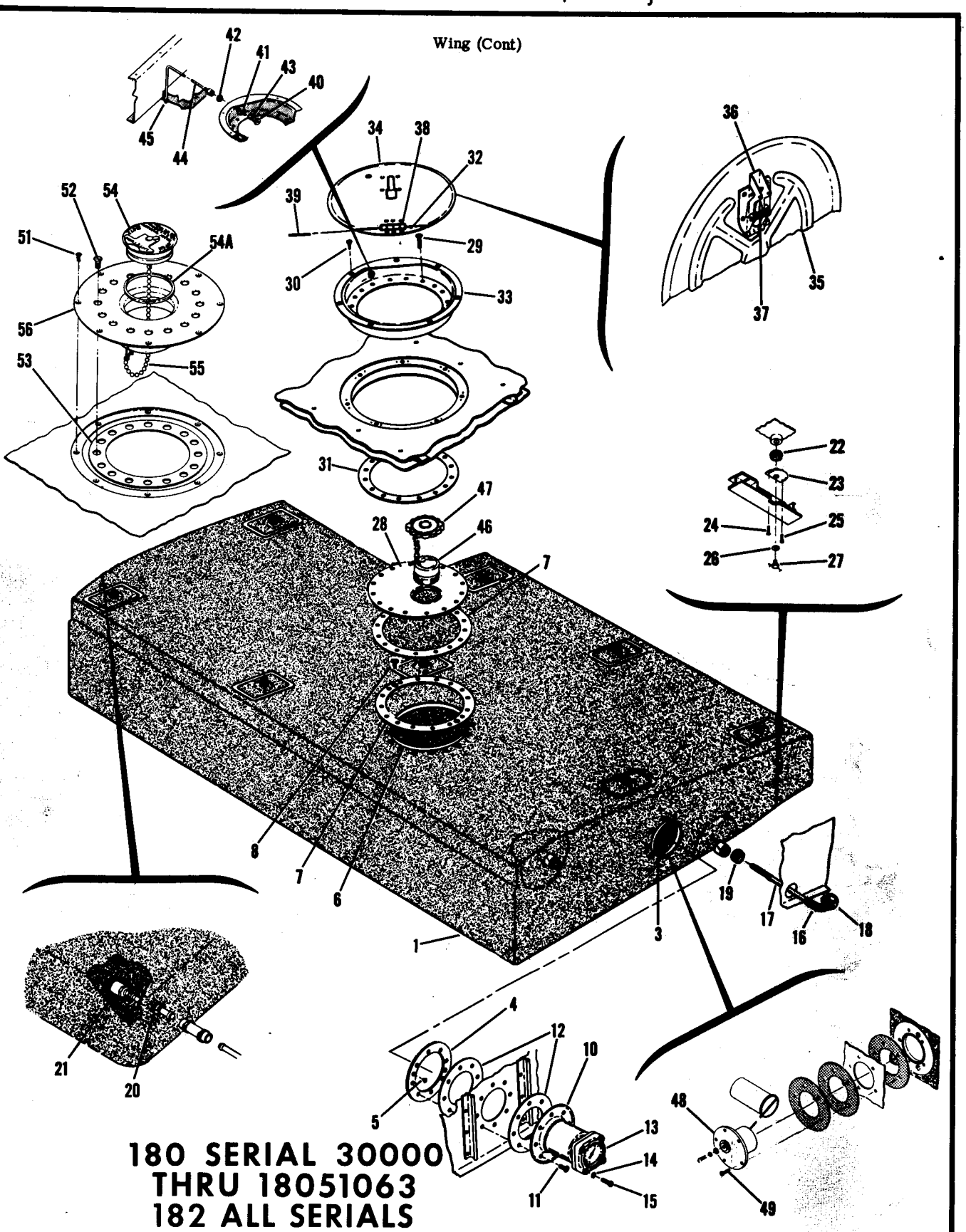

Figure 6. Fuel Tank Installation

FIGURE AND INDEX NO.	PART NUMBER		DESCRIPTION 1 2 3 4 5 6 7	UNITS PER ASSY	USABLE ON CODE
6-			TANK INSTALLATION-FUEL LH - 180 SERIAL	NP	
			TANK INSTALLATION-FUEL RH - 180 SERIAL	NP	
- 1	0726000-13	*	TANK ASSEMBLY-FUEL LH---- 30000 THRU	1	A
	0726000-2		TANK ASSEMBLY-FUEL RH---- 30000 THRU	1	A
	0726001-9		TANK ASSEMBLY-FUEL LH------ 18051063	1	B
	0726001-10		TANK ASSEMBLY-FUEL RH------ 18051063	1	B
- 2	0726001-3		RING ASSEMBLY-FUEL GAGE ADAPTER	1	B
- 3	0726000-6		RING ASSEMBLY-FUEL GAGE ADAPTER INNER --182 ALL	1	A
- 4	0726000-5		RING-FUEL GAGE ADAPTER OUTER---------- 182 ALL	1	A
			ATTACHING PARTS		
- 5	AN509-10R4		SCREW ---------- SERIALS	4	
			---*---		
- 6	0726000-8		RING ASSEMBLY-FILLER NECK ADAPTER INNER	1	A
	0726001-6		RING ASSEMBLY-FILLER NECK ADAPTER INNER	1	B
- 7	0726000-7		RING-FILLER NECK ADAPTER OUTER	1	A
	0726001-5		RING-FILLER NECK ADAPTER OUTER	1	B
			ATTACHING PARTS		
- 8	AN509-10R4		SCREW	2	
			---*---		
	0726000-11		CLIP-HANGER	8	A
- 9			DELETED, NOT PROCURABLE		
- 10	0722011-1		ADAPTER ASSEMBLY	1	A
			ATTACHING PARTS		
- 11	NAS222-7		SCREW	8	A
			---*---		
- 12	0726000-9		GASKET	2	A
- 13	0422006-2		GAGE-FUEL	1	A
			ATTACHING PARTS		
- 14	1114-5		WASHER-----SLK	4	
- 15	AN502-416-10		SCREW	4	
			---*---		
- 16	0720000-3		STRAINER ASSEMBLY-FUEL TANK	1	
- 17			PROTECTOR-RUBBER HOSE	1	
- 18	AN818-6D		NUT	1	
- 19	NAS397-14-1		CLAMP TIN A3122-14-1	1	
- 20	NAS397-16-1	*	CLAMP TIN A3122-16-1	1	
- 21	0716125-2	*	VALVE ASSEMBLY-VENT LH TANK ONLY	1	
	0716126		TUBE ASSEMBLY	1	
	0716124-6		VALVE ASSEMBLY	1	
- 22	NAS397-16-1		CLAMP TIN A3122-16-1	1	
- 23	0322526-6		ADAPTER ASSEMBLY-FUEL TANK DRAIN	1	
			ATTACHING PARTS		
- 24	AN515-8R7		SCREW	1	
- 25	AN500A8-7		SCREW	1	
			---*---		
- 26	AN902B4		GASKET-DRAIN PLUG	1	
- 27	0320105		PLUG-FUEL TANK DRAIN	1	
	0526001-3		VALVE-FLUSH	1	
- 28	0721300-13		ADAPTER ASSEMBLY-FILLERNECK	1	A
	0721302-1		PLATE ASSEMBLY-FILLER NECK	1	C
			ATTACHING PARTS		
- 29	NAS-222-7		SCREW	16	
			---*---		
	0721300-1		FILLER NECK ASSEMBLY	1	
			ATTACHING PARTS		
- 30	S-1022Z-8-8		SCREW CESSNA STANDARD	7	
			---*---		
- 31	0726002-1		GASKET-FILLER NECK	2	
- 32	0721300-4		PLATE-FUEL DOOR	1	
- 33	0721300-9		WELD ASSEMBLY	1	
- 34	0721300-16		DOOR ASSEMBLY-FUEL	1	
- 35	0721300-19		DOOR-FUEL	1	
- 36	S-1188-1		LATCH HWL	1	
- 37	MS24665-134		PIN-COTTER	1	
- 38	0721300-18		HINGE ASSEMBLY-FUEL DOOR	1	
- 39	MS20253-2-175		PIN-HINGE	1	
- 40	0720004-1		UNION-OVERFLOW	1	D
- 41	AN960PD616		WASHER	1	D
- 42	AN924-3D		NUT-OVERFLOW DRAIN	1	D
- 43	AN6227B6		O RING	1	D
- 44	0500106-159		TUBE-OVERFLOW DRAIN	1	D
- 45	MS35489-4		GROMMET-OVERFLOW	1	D
- 46	0311240-17		NECK-FUEL	1	
- 47	0311360-4		CAP-FUEL	1	
	0311360-5		GASKET-CAP	1	

CONTINUED ON PAGE 16

FIGURE AND INDEX NO.	PART NUMBER	DESCRIPTION 1 2 3 4 5 6 7	UNITS PER ASSY	USABLE ON CODE
6- 48	0726110-1	GAGE UNIT-FUEL TANK	1	B
		ATTACHING PARTS		
- 49	AN520-10R5	SCREW	5	
		---*---		
- 50	0726001-7	GASKET-FUEL GAGE	2	B
-50A	0726001-13	GASKET-FUEL GAGE	1	B
	0721303-1	CAP AND ADAPTER ASSEMBLY-FUEL	1	F
	0721305-1	CAP AND ADAPTER ASSEMBLY-FUEL ALT	1	F
		ATTACHING PARTS		
- 51	S-1021Z-8-8	SCREW CESSNA STANDARD	8	
- 52	AN507-428R7	SCREW	16	
- 53	0726000-10	GASKET	1	
		---*---		
- 54	0721303-2	CAP	1	
	0721305-2	CAP ALT	1	
-54A	MS29513-232	O RING	1	F
- 55	0721303-3	CHAIN	1	
	0721305-3	CHAIN ALT	1	
- 56	0721303-4	ADAPTER	1	
	0721305-4	ADAPTER ALT	1	
	SK180-6 #	SERVICE KIT-FUEL VENT	1	E

A---180 SERIAL 30000 THRU 32661
182 SERIAL 33000 THRU 33842.
B---180 SERIAL 32662 THRU 18051063
182 SERIAL 33843 & ON
C---180 SERIAL 32662 THRU 50448
182 SERIAL 33843 THRU 51825
D---180 SERIAL 30000 THRU 50448
182 SERIAL 33000 THRU 51825
E---180 SERIAL 30000 THRU 32487
F---180 SERIAL 50449 THRU 18051063
182 SERIAL 51826 & ON

*NOTE. WHEN ORDERING A LH FUEL TANK FOR 180 AIRPLANES WITH FUEL VENT IN THE CABIN TOP, ORDER SK180-6. THIS KIT INCLUDES PARTS MARKED * ABOVE AND PARTS MARKED * ON FIGURE 96.

#NOTE. THIS IS A SPECIAL KIT OF ITEMS USED WHEN REPLACING THE LH FUEL TANK ON 180 AIRPLANES WITH THE FUEL VENT IN THE CABIN TOP.

FIGURE AND INDEX NO.	PART NUMBER		DESCRIPTION 1 2 3 4 5 6 7	UNITS PER ASSY	USABLE ON CODE
6A-			TANK INSTALLATION-FUEL RH	NP	A
		*	TANK INSTALLATION-FUEL RH EXTENDED RANGE	NP	A
			TANK INSTALLATION-FUEL LH	NP	A
		*	TANK INSTALLATION-FUEL LH EXTENDED RANGE	NP	A
- 1	0726001-16		TANK ASSEMBLY-FUEL RH	1	
	0726001-15		TANK ASSEMBLY-FUEL LH	1	
- 2	1200065-4	*	TANK ASSEMBLY-FUEL RH-----EXTENDED RANGE	1	
	1200065-3	*	TANK ASSEMBLY-FUEL LH-----EXTENDED RANGE	1	
- 3	0726001-3		RING ASSEMBLY-FUEL GAGE ADAPTER	1	
- 4	FCC-20068		FITTING GY	1	
	FCC-20068	*	FITTING GY	2	
			ATTACHING PARTS		
- 5	AN509-10R4		SCREW	2	
	AN509-10R4	*	SCREW	2	
			---*---		
- 6	295055		HANGER UC	8	
	295055		HANGER UC	10	
- 7	0720007-1		STRAINER ASSEMBLY-FUEL TANK FORWARD	1	
- 8	0720007-2		STRAINER ASSEMBLY-FUEL TANK AFT	1	
- 9			PROTECTOR-RUBBER HOSE	1	
- 10	AN818-6D		NUT	1	
- 11	NAS397-14-1		CLAMP TIN A3122-14-1	4	
- 12	0716125	#	VALVE ASSEMBLY-VENT	1	
	0721118-1	**	PLUG	1	
			ATTACHING PARTS		
- 13	NAS397-14		CLAMP	5	
	NAS397-14	**	CLAMP	3	
			---*---		
- 14	0716127-1		LINE ASSEMBLY-VENT LH	1	
	0716127-2	#	LINE ASSEMBLY-VENT RH	1	
	1200106-51	*	LINE ASSEMBLY-VENT LH-----EXTENDED RANGE	1	
	1200106-52	*	LINE ASSEMBLY-VENT RH-----EXTENDED RANGE	1	
			ATTACHING PARTS		
- 15	S-51-8	#	HOSE-2.0 IN. LG.-----BULK ITEM-----REF S-51-8-8	1	
- 16	0512006	##	ANGLE	1	
	0512006-1	#	ANGLE	1	
- 17	NAS397-14-1	#	CLAMP TIN 3122-14-1	2	
- 18	A3047A-8-92	#	CLAMP TIN	2	
	A3047A-8-92	##	CLAMP TIN	1	
- 19	S-1021Z-8-8	#	SCREW	2	
	S-1021Z-8-8	##	SCREW	1	
- 20	MS35489-14	#	GROMMET	1	
			---*---		
- 21	NAS397-16-1		CLAMP	1	
- 22	0322526-6		ADAPTER ASSEMBLY-FUEL TANK DRAIN	1	
			ATTACHING PARTS		
- 23	AN515-832R7		SCREW	1	
- 24	AN500A8-7		SCREW	1	
			---*---		
- 25	AN902-4		GASKET-DRAIN PLUG	1	
- 26	0320105		PLUG-FUEL DRAIN	1	
	0526001-3		VALVE-FLUSH	1	
- 27	0726002-1		GASKET	1	
	0726002-1	*	GASKET	2	
- 28	0726110-1		TRANSMITTER & FLOAT-FUEL	1	
			ATTACHING PARTS		
- 29	AN520-10R10		SCREW	5	
			---*---		
- 30	0726001-7		GASKET-FUEL TRANSMITTER	2	
- 31	0726001-13		GASKET-FUEL TRANSMITTER	1	
- 32	0413247		GROUND STRAP	1	
			ATTACHING PARTS		
- 33	AN515-8R8		SCREW	1	
- 34	MS20365-832C		NUT	1	
			---*---		
	0721303-1		CAP & ADAPTER ASSEMBLY-FUEL	1	
	0721305-1		CAP & ADAPTER ASSEMBLY ALT	1	
	0721303-11	*	CAP & ADAPTER ASSEMBLY-FUEL	1	
	0721305-11	*	CAP & ADAPTER ASSEMBLY ALT	1	
			ATTACHING PARTS		
- 35	AN509-10R6		SCREW	8	
- 36	AN507-428R7		SCREW	16	
			---*---		

180 SERIAL 18051064 & ON

S-PART NOS APPEARING ON THIS PAGE ARE CESSNA STANDARD

CONTINUED ON PAGES 17A & 17B

Wing (Cont)

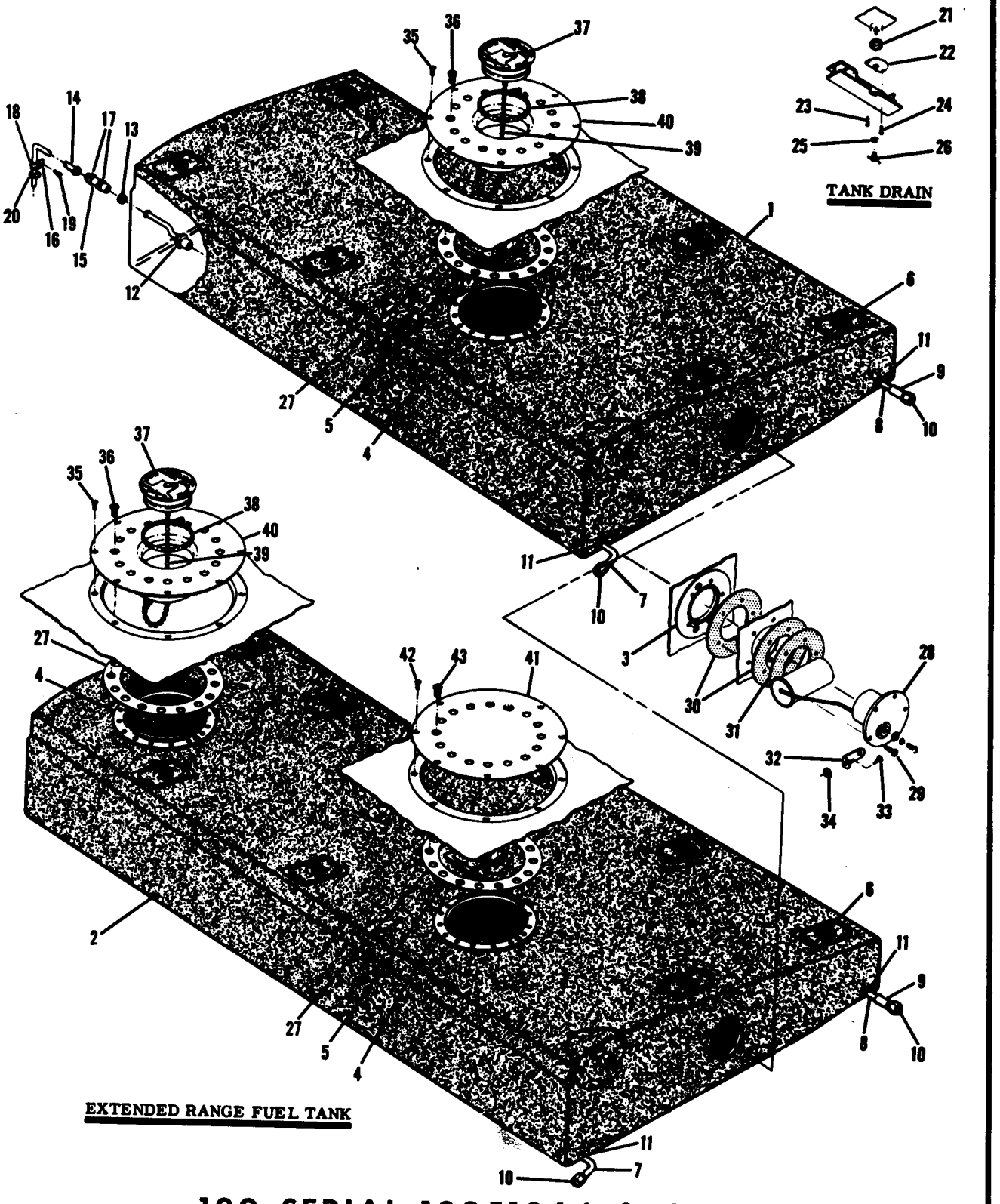

180 SERIAL 18051064 & ON

Figure 6A. Fuel Tank Installation

FIGURE AND INDEX NO.	PART NUMBER		DESCRIPTION 1 2 3 4 5 6 7	UNITS PER ASSY	USABLE ON CODE
6A- 37	0721303-2		CAP-FUEL 32.5 GAL.	1	
	0721305-2		CAP-FUEL 32.5 GAL ALT	1	
	0721303-12	*	CAP-FUEL 42.0 GAL.	1	
	0721305-12	*	CAP-FUEL 42.0 GAL. ALT	1	
- 38	MS29513-232		O RING	1	
	-416-53		HANDLE-GAS CAP	1	
	AN122697		PIN-HANDLE	1	
- 39	0721303-3		CHAIN	1	
	0721305-3		CHAIN ALT	1	
- 40	0721303-4		ADAPTER	1	
	0721305-4		ADAPTER ALT	1	
	0721303-13	*	ADAPTER	1	
	0721305-13	*	ADAPTER ALT	1	
- 41	1220022-1	*	PLATE-COVER	1	
			ATTACHING PARTS		
- 42	AN509-10R6		SCREW	8	
- 43	AN507-428R7		SCREW	16	
			---*---		

A---180 SERIAL 18051064 & ON

NOTE. * DENOTES PARTS USED WITH EXTENDED RANGE FUEL TANK

NOTE. # THESE PARTS ARE NOT USED WITH 0726001-16 RH STANDARD FUEL TANK

NOTE. ** THESE PARTS USED WITH 0726001-16 STANDARD FUEL TANK ONLY

FIGURE AND INDEX NO.	PART NUMBER	DESCRIPTION 1 2 3 4 5 6 7	UNITS PER ASSY	USABLE ON CODE
7-		AILERON INSTALLATION-LH	NP	
		AILERON INSTALLATION-RH	NP	
- 1	0523223	BELLCRANK-AILERON LH	1	
	0523223-1	BELLCRANK-AILERON RH	1	
		ATTACHING PARTS		
- 2	AN4-42A	BOLT	2	
- 3	0522629	WASHER	2	
- 4	0523221	BUSHING	1	
- 5	0523222	BUSHING	1	
- 6	MS20365-428C	NUT	2	
		---*---		
- 7	0422280	BUSHING	2	
- 8	B-610	BEARING TOR	2	
- 9	0523218	ROD ASSEMBLY-AILERON PUSH-PULL	1	
		ATTACHING PARTS		
- 10	AN3-7A	BOLT	2	
- 11	MS20365-1032C	NUT	2	
		---*---		
- 12	S-1106-3	ROD END CESSNA STANDARD	2	
- 13	AN316-4R	NUT-CHECK	2	
	0523800-14	AILERON ASSEMBLY-RH WHEN EXHAUSTED USE 0523800-17	1	A
	0523800-15	AILERON ASSEMBLY-LH WHEN EXHAUSTED USE 0523800-16	1	A
	0523800-16	AILERON ASSEMBLY LH	1	
	0523800-17	AILERON ASSEMBLY RH	1	
- 14	0523806	SPAR-AILERON LH	1	
	0523806-1	SPAR-AILERON RH	1	
- 15	0523808	RIB NO 1-AILERON LH	2	
	0523808-2	RIB NO 1-AILERON RH	2	
- 16	0523809	RIB NO 2-AILERON LH	1	
	0523809-1	RIB NO 2-AILERON RH	1	
- 17	0523810	RIB NO 3-AILERON	1	
- 18	0523811	RIB NO 4-AILERON RH	1	
	0523811-1	RIB NO 4-AILERON LH	1	
- 19	0523812-2	BRACKET-CONTROL AILERON LH	1	
	0523812-3	BRACKET-CONTROL AILERON RH	1	
		ATTACHING PARTS		
- 20	NAS455-163C4-8	RIVET	6	
		---*---		
- 21	0523814-4	BRACKET-AILERON WEIGHT	1	A
	0523814-5	BRACKET-AILERON WEIGHT	1	B
- 22	0724115-1	WEIGHT-AILERON BALANCE	1	
- 23	0523800-6	SKIN-AILERON UPPER INBOARD LH	1	
	0523800-7	SKIN-AILERON UPPER INBOARD RH	1	
- 24	0523800-8	SKIN-AILERON UPPER OUTBOARD LH	1	
	0523800-9	SKIN-AILERON UPPER OUTBOARD RH	1	
- 25	0523800-10	SKIN-AILERON LOWER INBOARD LH	1	
	0523800-11	SKIN-AILERON LOWER INBOARD RH	1	
- 26	0523800-12	SKIN-AILERON LOWER OUTBOARD LH	1	
	0523800-13	SKIN-AILERON LOWER OUTBOARD RH	1	
- 27	0523813-1	SPACER	1	
- 28	0523813-8	SPACER	1	
- 29	0523813-6	SPACER	1	
- 30	0523813-7	SPACER	1	
- 31	0523807	HINGE-AILERON	3	
		ATTACHING PARTS		
- 32	NAS229-8	SCREW	12	
		---*---		

180-182 ALL SERIALS

A---180 SERIAL 30000 THRU 50259
182 SERIAL 33000 THRU 51213

CONTINUED ON PAGE 19

Wing (Cont)

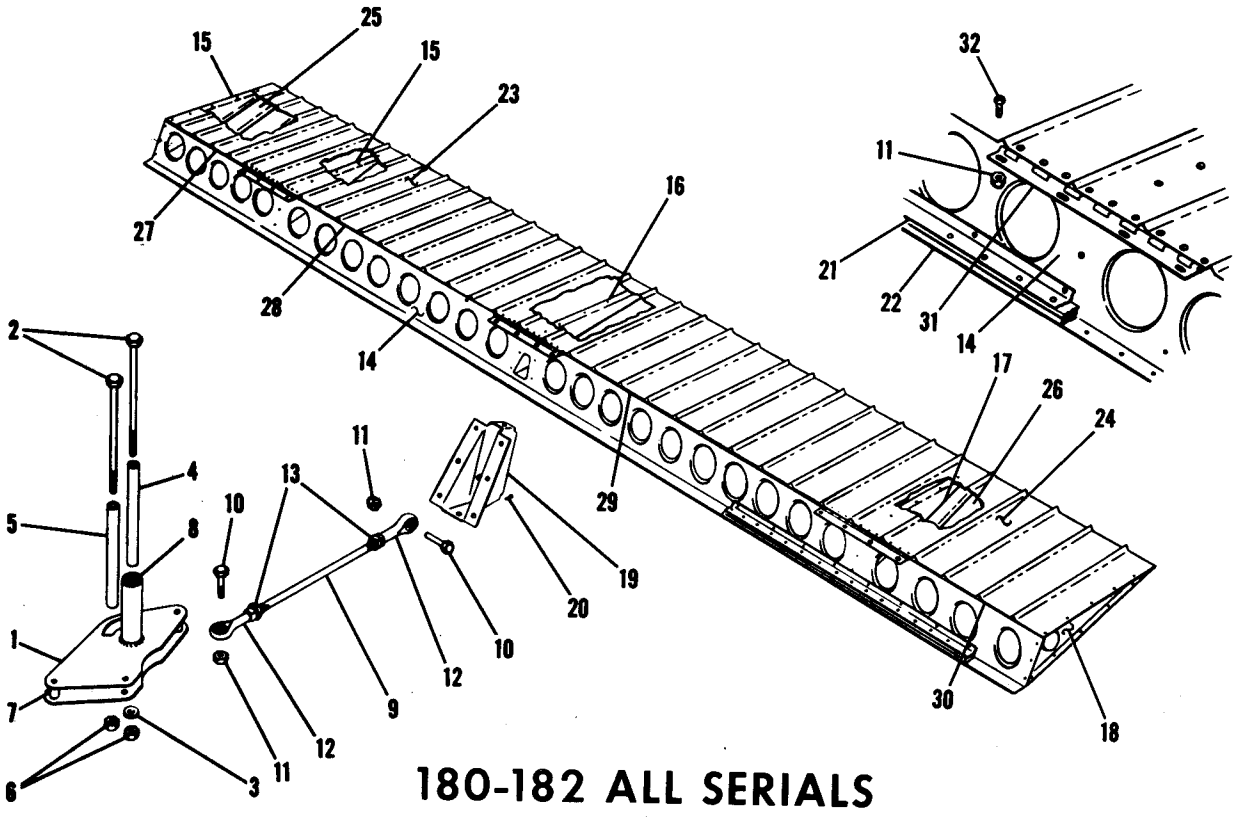

180-182 ALL SERIALS

Figure 7. Aileron Installation

FIGURE AND INDEX NO.	PART NUMBER	DESCRIPTION 1 2 3 4 5 6 7	UNITS PER ASSY	USABLE ON CODE
7-		B---180 SERIAL 50260 & ON 182 SERIAL 51214 & ON NOTE. ON LEFT HAND AILERON, IF THE NO. 4 RIB OUTBOARD HAS FLANGES TURNED OUT FROM CENTER OF AILERON ORDER 0523811 RIB. IF RIB HAS FLANGES TURNED INBOARD ORDER 0523811-1 RIB. ON LEFT-HAND AILERON, THE NO. 1 RIB INBOARD IS AN 0523808 RIB FOR ALL SERIALS. ON RIGHT-HAND AILERON, IF THE NO. 4 RIB OUTBOARD HAS FLANGES TURNED OUT FROM CENTER OF AILERON ORDER 0523811-1 RIB. IF RIB HAS FLANGES TURNED INBOARD ORDER 0523811 RIB. ON RIGHT-HAND AILERON, IF THE NO. 1 RIB INBOARD HAS FLANGES TURNED OUT FROM CENTER OF AILERON ORDER 0523808 RIB. IF RIB HAS FLANGES TURNED TOWARD CENTER OF AILERON ORDER 0523808-2 RIB.		

Wing (Cont)

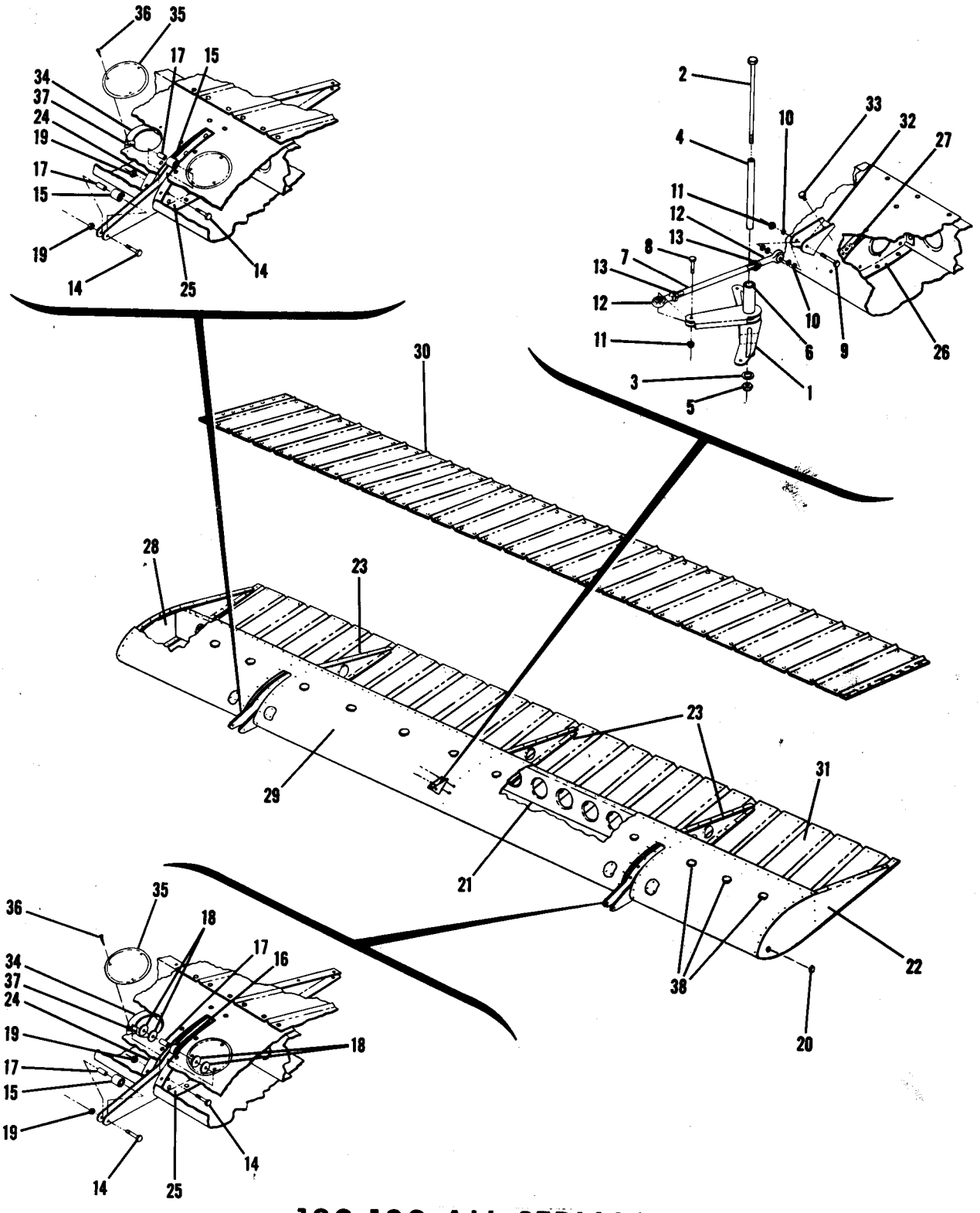

180-182 ALL SERIALS

Figure 8. Flap Installation

FIGURE AND INDEX NO.	PART NUMBER		DESCRIPTION 1 2 3 4 5 6 7	UNITS PER ASSY	USABLE ON CODE
8-			FLAP INSTALLATION LH	NP	
			FLAP INSTALLATION RH	NP	
- 1	0523535		BELLCRANK ASSEMBLY-FLAP LH	1	
	0523535-1		BELLCRANK ASSEMBLY-FLAP RH	1	
			ATTACHING PARTS		
- 2	AN4-60A		BOLT	1	
- 3	0522629		WASHER-FLAP BELLCRANK	1	
- 4	0523536		BUSHING	1	
- 5	MS20365-428C		NUT	1	
			---*---		
- 6	B-610		BEARING TOR	2	
- 7	0523537		ROD ASSEMBLY-FLAP PUSH PULL	1	
			ATTACHING PARTS		
- 8	AN3-6A		BOLT	1	
- 9	AN3-11A		BOLT	1	
- 10	AN960-10		WASHER	5	
- 11	MS20365-1032C		NUT	2	
			---*---		
- 12	S-1106-3		ROD END CESSNA STANDARD	2	
- 13	AN316-4R		NUT-CHECK	2	
	0523901	*	FLAP ASSEMBLY-WING LH	1	
	0523901-1	*	FLAP ASSEMBLY-WING RH	1	
			ATTACHING PARTS		
- 14	AN3-10A		BOLT	4	
- 15	0523921		ROLLER ASSEMBLY	3	
- 16	0523920		ROLLER ASSEMBLY	1	
- 17	0523919		BUSHING	4	
- 18	0523922		SPACER-FLAP-----OUTBOARD ROLLER ONLY	4	
- 19	MS20365-1032C		NUT	4	
			---*---		
- 20	48172		PLUG BUTTON UC	1	
- 21	0523911		SPAR-FLAP LH	1	
	0523911-1		SPAR-FLAP RH	1	
- 22	0523912-1		RIB-FLAP LH END	1	
- 23	0523923		RIB-FLAP TRAILING EDGE	3	
- 24	0523901-8		RIB ASSEMBLY-FLAP SUPPORT ARM LH	2	
- 25	0523901-9		RIB ASSEMBLY-FLAP SUPPORT ARM RH	2	
- 26	0523914-2		RIB ASSEMBLY-FLAP LEADING EDGE CENTER	1	
- 27	NAS680A3		NUTPLATE	2	
- 28	0523912		RIB-FLAP RH END	1	
- 29	0523901-2		SKIN-FLAP LEADING EDGE LH	1	
	0523901-3		SKIN-FLAP LEADING EDGE RH	1	
- 30	0523901-4		SKIN-FLAP UPPER LH	1	
	0523901-5		SKIN-FLAP UPPER RH	1	
- 31	0523901-6		SKIN-FLAP LOWER LH	1	
	0523901-7		SKIN-FLAP LOWER RH	1	
- 32	0523918		BRACKET-FLAP CONTROL ATTACHMENT	1	
			ATTACHING PARTS		
- 33	AN3-4A		BOLT	2	
			---*---		
- 34	S-237-3		DOUBLER-ACCESS OPENING CESSNA STANDARD	4	
- 35	S-225-3		PLATE-COVER CESSNA STANDARD	4	
			ATTACHING PARTS		
- 36	S-1021Z-8-8		SCREW CESSNA STANDARD	12	
- 37	NAS395-13-3		NUT TIN A6077-8Z-3	12	
			---*---		
- 38	S-1093-1	¤	PLUG BUTTON-ANTI-FRICTION ----CESSNA STANDARD	14	

180-182 ALL SERIALS

*NOTE.WHEN ORDERING THESE ASSEMBLIES ALSO ORDER PARTS MARKED ¤.

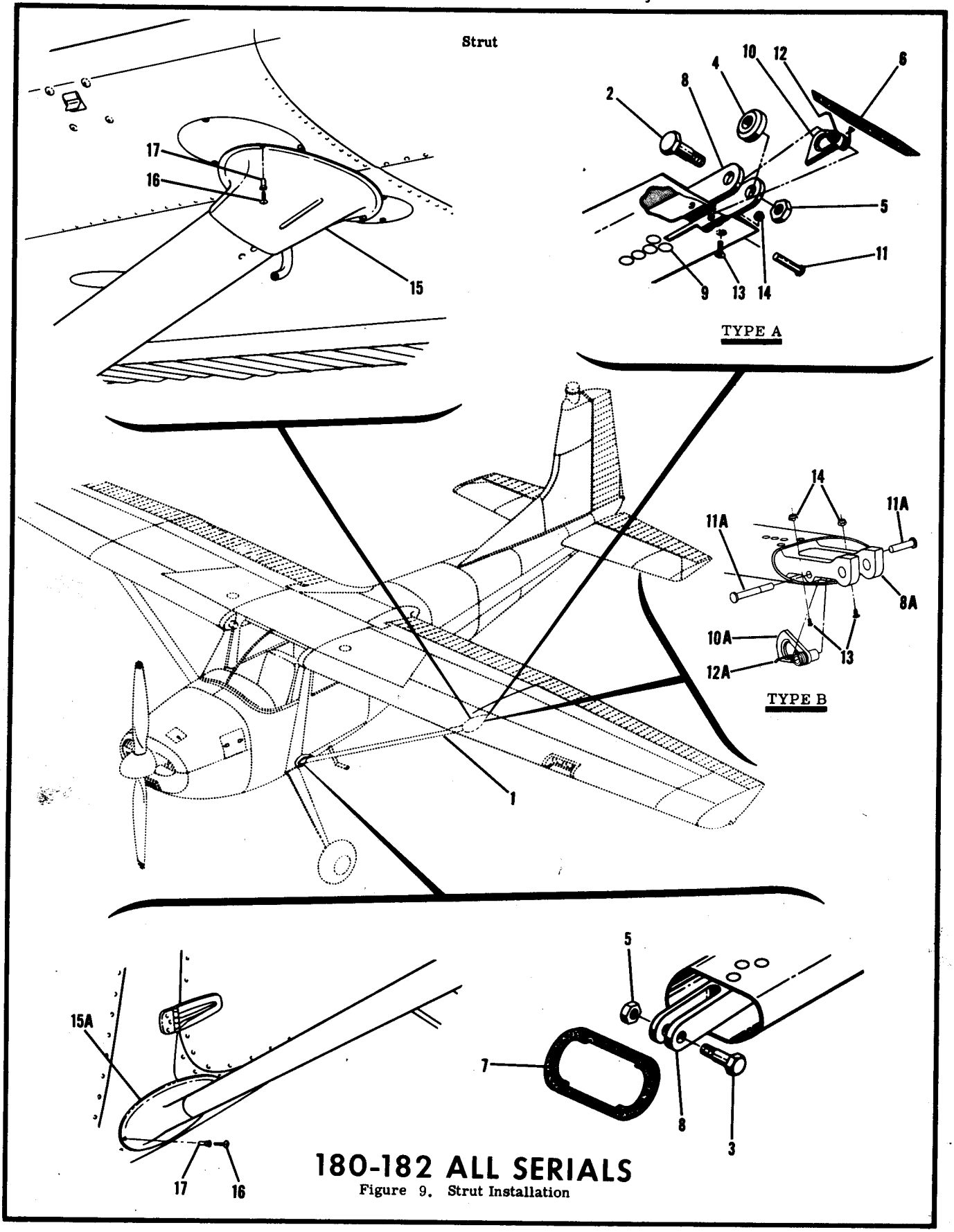

180-182 ALL SERIALS

Figure 9. Strut Installation

FIGURE AND INDEX NO.	PART NUMBER	DESCRIPTION	UNITS PER ASSY	USABLE ON CODE
		1 2 3 4 5 6 7		
9-		STRUT INSTALLATION-WING	NP	
- 1	0723600-1 *	STRUT ASSEMBLY-LH	1	A
	0723600-2 *	STRUT ASSEMBLY-RH	1	A
	0723600-7	STRUT ASSEMBLY-LH	1	B
	0723600-8	STRUT ASSEMBLY-RH	1	B
		ATTACHING PARTS		
- 2	AN8-24A	BOLT	1	
	AN960-816L	WASHER	2	
- 3	AN8-17A	BOLT	1	
- 4	0523307	SPACER	1	
- 5	MS20365-820C	NUT	2	
- 6	0713018-1 ¤	SEAL	1	C
- 7	0713018-2 ¤	SEAL	1	C
		---*---		
- 8	0523608-2	FITTING-WING STRUT LOWER END	1	
- 8A	0523614-1	FITTING-WING STRUT UPPER END	1	
		ATTACHING PARTS		
- 9	MS20426AD10-32	RIVET	5	
	0723600-6	RIVET ALT	5	
		---*---		
- 10	0723601-1	RING-MOORING	1	A
	0723604-1	RING-MOORING	1	D
-10A	0523615-1	RING-MOORING	1	E
		ATTACHING PARTS		
- 11	MS20392-2-41	PIN	1	D
-11A	MS20392-2-25	PIN	2	E
- 12	0723601-2	SPRING	1	D
-12A	0523616-1	SPRING	1	E
- 13	AN507-832R6	SCREW	1	
- 14	MS20365-832C	NUT	1	
		---*---		
		WING STRUT FAIRING INSTALLATION	NP	B
- 15	0723605-3	FAIRING-UPPER LH	1	B
	0723605-4	FAIRING-UPPER RH	1	B
-15A	0723605-1	FAIRING-LOWER LH	1	B
	0723605-2	FAIRING-LOWER RH	1	B
		ATTACHING PARTS		
- 16	S-1021Z-6-6C	SCREW CESSNA STANDARD	3	B
- 17	A8K-75	RIVNUT GD	1	
		---*---		

180-182 ALL SERIALS

A---180 SERIAL 30000 THRU 50355
182 SERIAL 33000 THRU 51556
B---180 SERIAL 50356 & ON
182 SERIAL 51557 & ON
C---180 SERIAL 30000 & ON
182 SERIAL 33000 & ON
182 SKYLANE SERIAL 34754 THRU 51556
D---USED ON TYPE A. SEE DETAIL
180 SERIAL 50356 & ON
182 SERIAL 51557 & ON
E---USED ON TYPE B. SEE DETAIL
180 SERIAL 50356 & ON
182 SERIAL 51557 & ON
* NOTE. WHEN EXHAUSTED USE 0723600-7 & 0723600-8 FOR ALL SPARES
¤ NOTE. DO NOT USE WHEN STRUT FAIRINGS ARE INSTALLED
NOTE. FOR ACCESSORY KIT LISTINGS REFER TO PAGES 372 THRU 374B

Empennage (Cont)

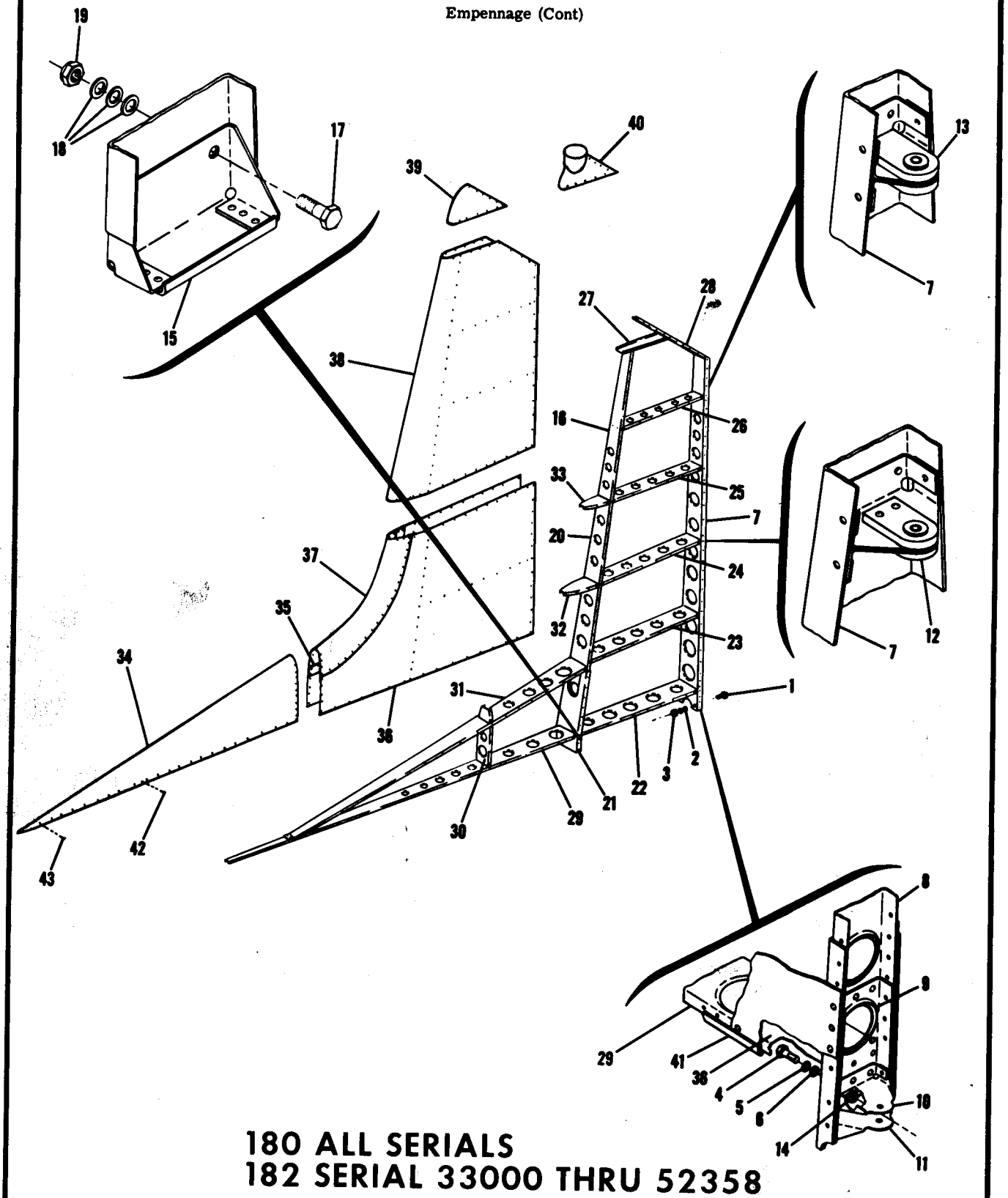

180 ALL SERIALS
182 SERIAL 33000 THRU 52358

Figure 10. Fin & Dorsal Installation

FIGURE AND INDEX NO.	PART NUMBER	DESCRIPTION 1 2 3 4 5 6 7	UNITS PER ASSY	USABLE ON CODE
10-		FIN & DORSAL INSTALLATION	NP	A
	0731000-41	FIN ASSEMBLY	1	
	0731000-32	SPAR ASSEMBLY-FIN REAR	1	
		ATTACHING PARTS		
- 1	NAS224-15	SCREW	2	
- 2	AN960-616	WASHER	2	
	AN960-616L	WASHER	2	
- 3	MS20365-624C	NUT	2	
- 4	AN5-7A	BOLT	2	
- 5	AN960-516L	WASHER	1	
- 6	AN960-616	WASHER	4	
		---*---		
- 7	0731000-34	SPAR ASSEMBLY-FIN REAR	1	
- 8	0731000-33	REINFORCEMENT-FIN REAR SPAR	1	
- 9	0731000-43	PLATE	1	
- 10	0731100-14	BRACKET-HINGE UPPER	1	
- 11	0731100-13	BRACKET-HINGE LOWER	1	
- 12	0731100-9	HINGE ASSEMBLY-CENTER	1	
- 13	0731100-7	HINGE ASSEMBLY-UPPER	1	
- 14	NAS680A5	NUTPLATE	1	
- 15	0712213	STOP-STABILIZER	1	
- 16	0731000-38	SPAR ASSEMBLY-FRONT FIN	1	
		ATTACHING PARTS		
- 17	AN5-6A	BOLT	2	
- 18	AN960-516	WASHER	6	
- 19	MS20365-524C	NUT	2	
		---*---		
- 20	0731000-11	SPAR-FIN FRONT	1	
- 21	0731000-37	CHANNEL-REINFORCEMENT	1	
- 22	0731000-1	RIB-FIN	1	
- 23	0731000-2	RIB-FIN	1	
- 24	0731000-3	RIB-FIN	1	
- 25	0731000-4	RIB-FIN	1	
- 26	0731000-5	RIB-FIN	1	
- 27	0731000-28	RIB-FIN TIP	1	
- 28	0731000-26	RIB-FIN TIP CANTED	1	
- 29	0731000-16	RIB-DORSAL LOWER	1	
- 30	0731000-23	RIB-DORSAL	1	
- 31	0731000-15	RIB-DORSAL UPPER	1	
- 32	0731000-12	RIB-FIN LEADING EDGE	1	
- 33	0731000-22	RIB-FIN LEADING EDGE	1	
- 34	0731000-25	SKIN-DORSAL	1	
- 35	0731000-17	PLATE-SPLICE	2	
- 36	0731000-18	SKIN-FIN LOWER	2	
- 37	0731000-21	SKIN-LEADING EDGE	1	
- 38	0731000-24	SKIN-FIN UPPER	1	
- 39	0731000-48	TIP ASSEMBLY-FIN	1	
- 40	0700031-2	TIP-FIN	1	
- 41	S-202RB	MOULDING CESSNA STANDARD	AR	
- 42	S-1021Z-8-8	SCREW CESSNA STANDARD	2	
- 43	S-1021Z-6-8	SCREW CESSNA STANDARD	2	

180 ALL SERIALS
182 SERIAL 33000 THRU 52358

A---180 SERIAL 30000 & ON
182 SERIAL 33000 THRU 52358
NOTE. FOR ACCESSORY KIT LISTINGS REFER TO
PAGES 372 THRU 374B

Empennage

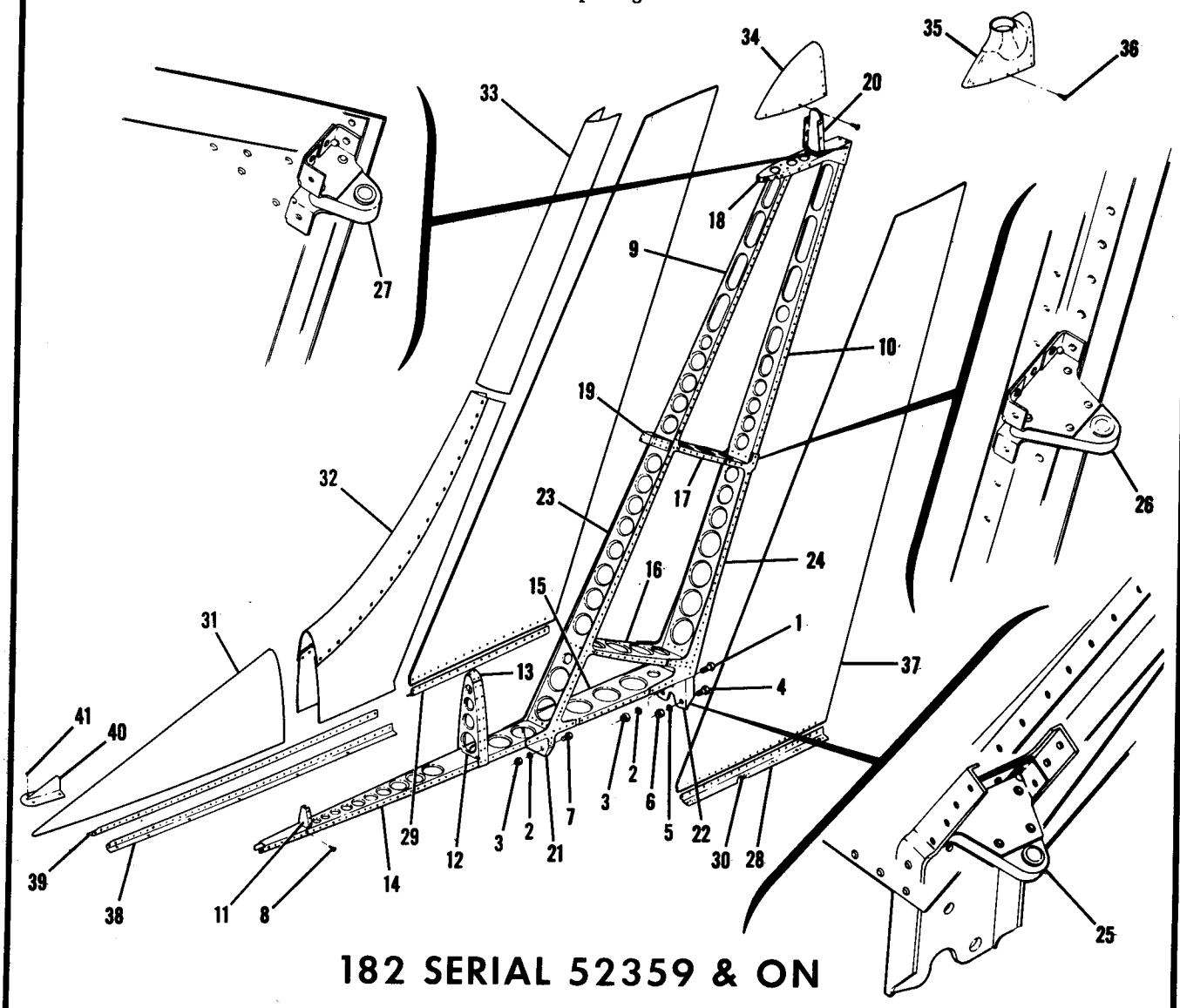

182 SERIAL 52359 & ON

Figure 10A. Swept Fin and Dorsal Installation

FIGURE AND INDEX NO.	PART NUMBER	DESCRIPTION 1 2 3 4 5 6 7	UNITS PER ASSY	USABLE ON CODE
10A-		FIN & DORSAL INSTALLATION-SWEPT	NP	A
	1231000-1	FIN ASSEMBLY WHEN EXHAUSTED USE 1231000-11	1	B
	1231000-11	FIN ASSEMBLY	1	C
		ATTACHING PARTS		
- 1	AN5-6A	BOLT	1	
- 2	AN960-516	WASHER	3	
- 3	MS20365-524C	NUT	3	
- 4	AN6-7A	BOLT	2	
- 5	AN960-616	WASHER	2	
- 6	MS20365-624C	NUT	2	
- 7	AN5-5A	BOLT	2	
- 8	AN515-8R8	SCREW	2	
		---*---		
- 9	1231002-1	SPAR-FORWARD	1	

CONTINUED ON PAGE 27

FIGURE AND INDEX NO.	PART NUMBER	DESCRIPTION 1 2 3 4 5 6 7	UNITS PER ASSY	USABLE ON CODE
10A- 10	1231002-2	SPAR-AFT	1	
- 11	1231003-1	RIB-DORSAL FORWARD	1	
- 12	1231004-3	RIB-DORSAL AFT	1	
- 13	1231004-2	STRIP-LEADING EDGE	1	
- 14	1231005-1	RIB-FIN BASE FORWARD	1	
- 15	1231005-2	RIB-FIN BASE AFT	1	
- 16	1231006-1	RIB-FIN LOWER	1	
- 17	1231007-1	RIB-FIN CENTER	1	
- 18	1231008-1	RIB ASSEMBLY-FIN UPPER	1	
	NAS698A08K	NUTPLATE	10	
- 19	1231009-1	FIN RIB ASSEMBLY-LEADING EDGE CENTER	1	
- 20	1231010-1	RIB ASSEMBLY-FIN TIP	1	
	NAS697A08K	NUTPLATE	2	
	NAS696A08K	NUTPLATE	4	
- 21	1231012-1	FITTING-FORWARD FIN SPAR ATTACH	1	
- 22	1231013-1	FITTING-AFT FIN SPAR ATTACH	1	
- 23	1231014-1	DOUBLER PLATE-FIN SPAR FORWARD	1	
- 24	1231014-2	DOUBLER PLATE-FIN SPAR AFT	1	
- 25	1231023-1	BRACKET ASSEMBLY-LOWER FIN HINGE	1	
- 26	1231023-2	BRACKET ASSEMBLY-CENTER FIN HINGE	1	
- 27	1231023-3	BRACKET ASSEMBLY-UPPER FIN HINGE	1	
- 28	1231025-1	ANGLE ASSEMBLY-FIN & STABILIZER FAIRING ATTACH LH	1	
- 29	1231025-2	ANGLE ASSEMBLY-FIN & STABILIZER FAIRING ATTACH RH	1	
- 30	NAS697A08K	NUTPLATE	5	
- 31	1231000-2	SKIN-DORSAL	1	
- 32	1231000-3	SKIN-LEADING EDGE LOWER	1	B
	1231000-12	SKIN-LEADING EDGE LOWER	1	C
- 33	1231000-4	SKIN-FIN LEADING EDGE	1	
- 34	1231000-5	CAP-TIP	1	D
	1231000-19	CAP-TIP	1	E
- 35	1200039-1	CAP-TIP ROTATING BEACON	1	D
	1200039-2	CAP-TIP ROTATING BEACON	1	E
		ATTACHING PARTS		
- 36	NAS220-6	SCREW	16	
		---*---		
- 37	1231000-6	SKIN-FIN	2	
- 38	1231027-1	FAIRING-DORSAL FIN TO FUSELAGE LH	1	
- 39	1231027-2	FAIRING-DORSAL FIN TO FUSELAGE RH	1	
- 40	1231028-1	FAIRING-DORSAL FIN	1	
		ATTACHING PARTS		
- 41	S-1021Z-8-6	SCREW CESSNA STANDARD	3	
		---*---		
		A---182 SERIAL 52359 & ON		
		B---182 SERIAL 52359 THRU 53007		
		C---182 SERIAL 18253008 & ON		
		D---182 SERIAL 18252359 THRU 18253398		
		E---182 SERIAL 18253399 & ON		
		NOTE. FOR ACCESSORY KIT LISTINGS REFER TO PAGES 372 THRU 374B		

This page intentionally left blank.

FIGURE AND INDEX NO.	PART NUMBER	DESCRIPTION 1 2 3 4 5 6 7	UNITS PER ASSY	USABLE ON CODE
11-		STABILIZER INSTALLATION---------- 180-182 ----------	NP	
	0732600-4	STABILIZER ASSEMBLY ---------- ALL SERIALS ----------	1	
		ATTACHING PARTS		
- 1	AN4-15A	BOLT ----------	2	
- 2	MS20365-428C	NUT ----------	2	
- 3	AN4-10A	BOLT ----------	1	
- 4	MS20365-428C	NUT ----------	1	
- 5	0732101-7	SPACER-STABILIZER HINGE ----------	1	
		---*---		
	0732605-2	SPAR ASSEMBLY-STABILIZER FRONT ----------	1	
- 6	0732607-1	SPAR-STABILIZER FRONT ----------	2	
- 7	0732606-3	CHANNEL-STABILIZER FRONT SPAR SPLICE----------	1	
- 8	0732609-1	RIB-STABILIZER TIP ----------	2	
- 9	0732611-1	RIB-STABILIZER NOSE----------	2	
- 10	0732611-2	RIB-STABILIZER NOSE----------	2	
- 11	0732611-3	RIB-STABILIZER NOSE----------	2	
- 12	0732611-4	RIB-STABILIZER NOSE----------	2	
- 13	0732611-6	RIB-STABILIZER NOSE CANTED ----------	2	
- 14	0732101-6	BRACKET-STABILIZER ATTACH UPPER ----------	2	
- 15	0732101-5	BRACKET-STABILIZER ATTACH LOWER ----------	2	
- 16	0732608-1	RIB-STABILIZER CANTED ----------	2	

CONTINUED ON PAGES 28 & 29

Empennage (Cont)

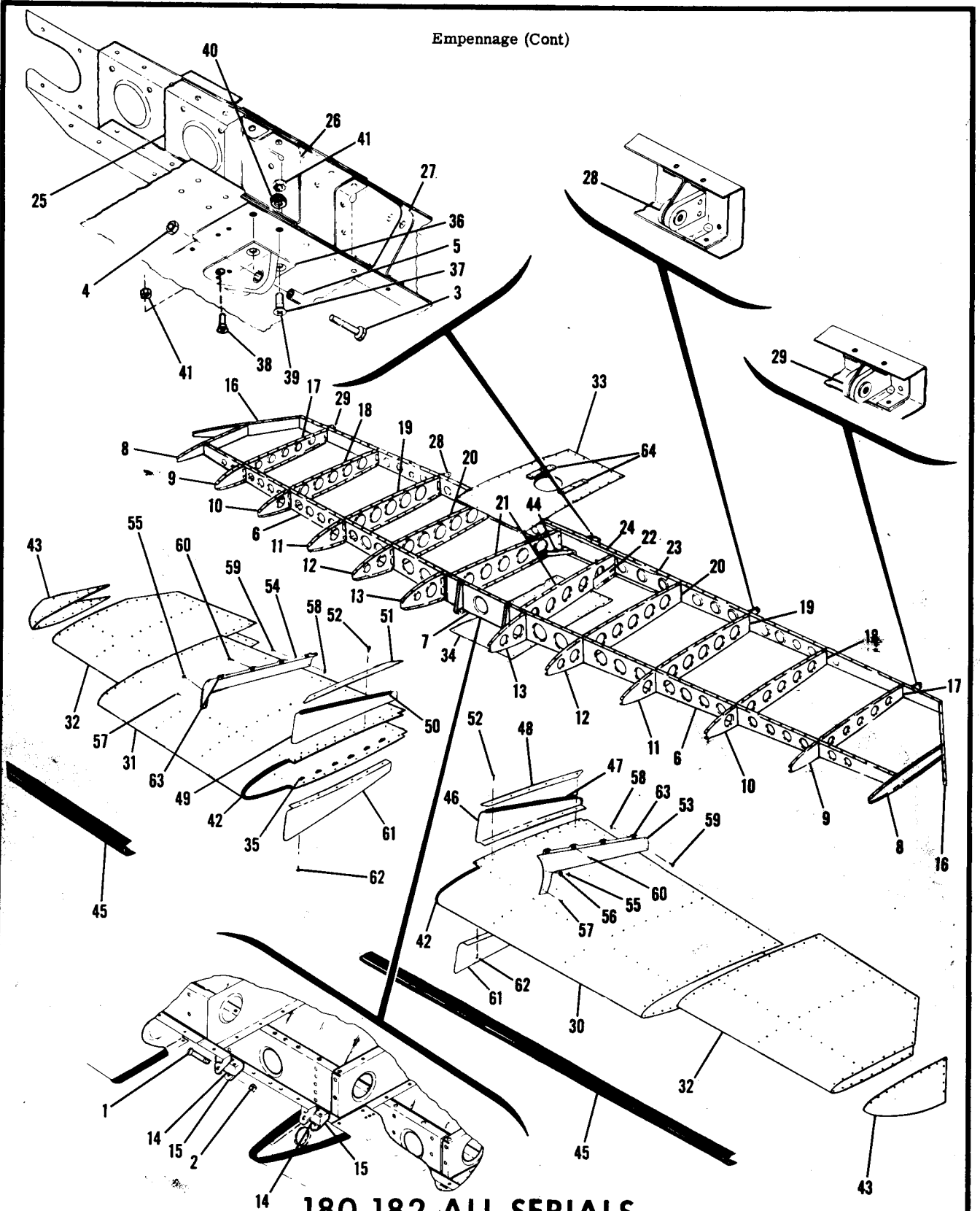

180-182 ALL SERIALS

Figure 11. Stabilizer Installation.

FIGURE AND INDEX NO.	PART NUMBER	DESCRIPTION 1 2 3 4 5 6 7	UNITS PER ASSY	USABLE ON CODE
11- 17	0732610-5	RIB-STABILIZER	2	
- 18	0732610-4	RIB-STABILIZER	2	
- 19	0732610-3	RIB-STABILIZER	2	
- 20	0732610-2	RIB-STABILIZER	2	
- 21	0732610-1	RIB-STABILIZER	2	
- 22	0732103-1	DOUBLER-STABILIZER HINGE LH	1	
	0732103-2	DOUBLER-STABILIZER HINGE RH	1	
	0732602-1	SPAR ASSEMBLY-STABILIZER REAR	1	
- 23	0732602-2	SPAR-STABILIZER REAR	2	
- 24	0732604-1	CHANNEL-STABILIZER REAR SPAR REINFORCEMENT	1	
- 25	0732603-1	CHANNEL-STABILIZER REAR SPAR REINFORCEMENT	1	
- 26	0732101-4	REINFORCEMENT-STABILIZER HINGE	2	
- 27	0732100-6	HINGE-STABILIZER CENTER	2	
- 28	0732100-7	HINGE ASSEMBLY-STABILIZER INBOARD	2	
	NAS296-4A	BEARING	1	
- 29	0732100-8	HINGE ASSEMBLY-STABILIZER OUTBOARD	2	
	NAS296-4A	BEARING	1	
- 30	0732600-5	SKIN-STABILIZER INBOARD LH	1	
- 31	0732600-6	SKIN-STABILIZER INBOARD RH	1	
- 32	0732600-2	SKIN-STABILIZER OUTBOARD	2	
- 33	0732600-7	SKIN-STABILIZER CENTER UPPER	1	
- 34	0732600-3	SKIN-STABILIZER CENTER LOWER	1	
- 35	NAS444-2	NUTPLATE TIN	24	
- 36	0732101-1	HINGE ASSEMBLY-STABILIZER	2	A
	0732101-11	HINGE ASSEMBLY-STABILIZER LH	1	B
	0732101-10	HINGE ASSEMBLY-STABILIZER RH	1	B
		ATTACHING PARTS		
- 37	AN509-416R12	SCREW	6	A
- 38	AN509-416R12	SCREW	2	B
- 39	AN509-416R13	SCREW	4	B
- 40	AN960-416	WASHER	6	
- 41	MS20365-428C	NUT	6	
		---*---		
- 41	0760679-1	BUSHING	1	
	0732101-7	SPACER	1	
- 42	S-202RB	MOULDING CESSNA STANDARD	AR	
- 43	0732613-1	TIP-STABILIZER	2	
- 44	0732106	REINFORCEMENT-RH	1	
	0732106-1	REINFORCEMENT-LH	1	
- 45	0332136-1	BOOT-ABRASION	2	
- 46	0732102-7	SEAL ASSEMBLY-STABILIZER UPPER LH	1	
- 47	S-202RB	MOULDING CESSNA STANDARD	AR	
- 48	0732102-5	STIFFENER-LH	1	
- 49	0732102-8	SEAL ASSEMBLY-STABILIZER UPPER RH	1	
- 50	S-202RB	MOULDING CESSNA STANDARD	AR	
- 51	0732102-6	STIFFENER-RH	1	
		ATTACHING PARTS		
- 52	S-1021Z-6-6	SCREW CESSNA STANDARD	12	
		---*---		
- 53	0712307-1	FAIRING ASSEMBLY-STABILIZER LH	1	C
	0712313-1	FAIRING-STABILIZER LH	1	D
- 54	0712307-2	FAIRING ASSEMBLY-STABILIZER RH	1	C
	0712313-2	FAIRING-STABILIZER RH	1	D
		ATTACHING PARTS		
	AN515-8R6	SCREW	6	D
- 55	AN515-8R8	SCREW	4	
- 56	AN960-8L	WASHER	4	
- 57	AN507-832R8	SCREW	2	
- 58	NAS395-10-3	NUT TIN A7852-8Z-3	4	C
- 59	S-1021Z-8-8	SCREW CESSNA STANDARD	4	C
- 60	S-1021Z-6-8	SCREW CESSNA STANDARD	8	C
- 61	0732102-3	SEAL-STABILIZER LOWER LH	1	
	0732102-4	SEAL-STABILIZER LOWER RH	1	
- 62	S-1021Z-6-6	SCREW CESSNA STANDARD	12	
		---*---		
- 63	NAS395-6-3	SPRING NUT TIN A1784-6Z-3	4	
- 64	0732616-1	RUB STRIP	2	

A---180 SERIAL 30000 THRU 31085, 31087 & 31088
B---180 SERIAL 31086,31089 & ON
182 SERIAL 33000 & ON
C---180 SERIAL 30000 & ON
182 SERIAL 33000 THRU 52358
D---182 SERIAL 52359 & ON
NOTE. FOR ACCESSORY KIT LISTINGS REFER TO PAGES 372 THRU 374B

Empennage (Cont)

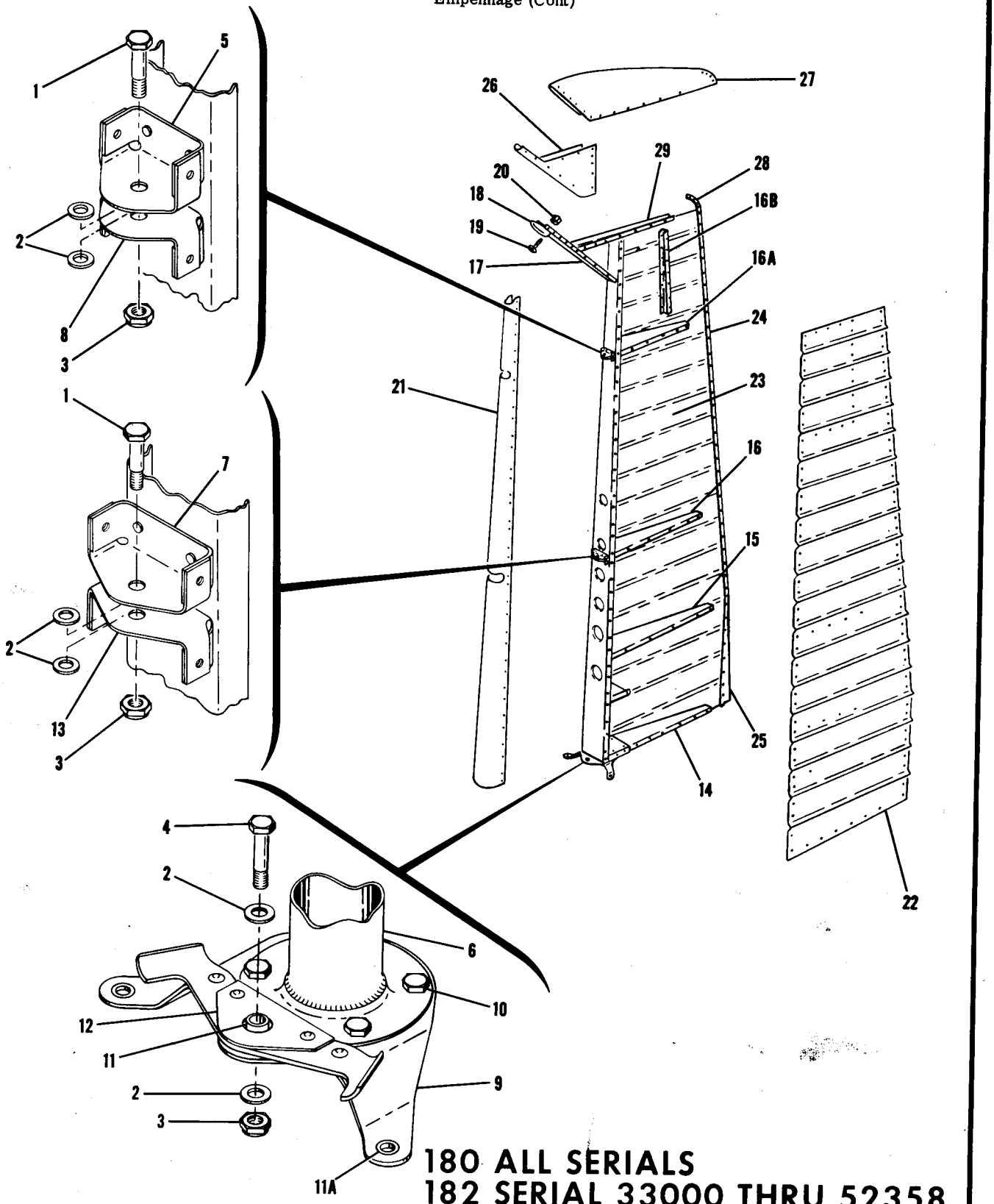

180 ALL SERIALS
182 SERIAL 33000 THRU 52358

Figure 12. Rudder Assembly

FIGURE AND INDEX NO.	PART NUMBER		DESCRIPTION 1 2 3 4 5 6 7	UNITS PER ASSY	USABLE ON CODE
12-	0731000-40		RUDDER ASSEMBLY ATTACHING PARTS	1	C
- 1	AN4-11A		BOLT	2	
- 2	AN960-416		WASHER	6	
- 3	MS20365-428C		NUT	3	
- 4	AN4-12A		BOLT ---*---	1	
- 5	0731100-5		BRACKET-UPPER HINGE UPPER	1	
	0731000-31		SPAR ASSEMBLY-RUDDER	1	
- 6	0733100		TUBE ASSEMBLY-TORQUE	1	
- 7	0731100-12		BRACKET-CENTER HINGE UPPER	1	
- 8	0731100-6		BRACKET-UPPER HINGE LOWER	1	
- 9	0733102		BELLCRANK ASSEMBLY-RUDDER	1	A
	0733102-5		BELLCRANK ASSEMBLY-RUDDER ATTACHING PARTS	1	B
- 10	AN3-5A		BOLT	4	
	AN960-10L		WASHER	8	
	MS20365-1032C		NUT ---*---	4	
- 11	S1K-5		BEARING FAF	1	
-11A	0733103		BUSHING	2	
- 12	0733102-3		RETAINER-BEARING	1	
- 13	0731100-11		BRACKET-CENTER HINGE LOWER	1	
- 14	0731000-6		RIB-RUDDER	1	
- 15	0731000-7		RIB-RUDDER	1	
- 16	0731000-8		RIB-RUDDER	1	
-16A	0731000-49		RIB-RUDDER	1	
-16B	0731000-50		STIFFENER	1	
- 17	0731000-36		RIB-RUDDER CANTED	1	
- 18	0733101-1		WEIGHT-RUDDER BALANCE ATTACHING PARTS	1	
- 19	AN520-10R28		SCREW	1	
- 20	22A21-22-02		NUT-FLOATING EN ---*---	1	
- 21	0731000-39		SKIN-NOSE	1	
- 22	0731000-13	*	SKIN-LH	1	
- 23	0731000-14	*	SKIN-RH	1	
- 24	0731000-35		SPACER	1	
- 25	0731000-30		TAB-RUDDER TRIM	1	
- 26	0731000-9		SKIN-RUDDER HORN	1	
- 27	0731000-19		TIP-RUDDER	1	
- 28	0731000-45		SPACER	1	
- 29	0731000-27		RIB-RUDDER	1	

180 ALL SERIALS

182 SERIAL 33000 THRU 52358

A---180 SERIAL 30000 THRU 32150
B---180 SERIAL 32151 & ON
182 SERIAL 33000 THRU 52358
C---180 SERIAL 30000 & ON
182 SERIAL 33000 THRU 52358
*NOTE. WHEN ORDERING THIS OR THESE PARTS ALSO ORDER 0731000-49 & -50 UNLESS RUDDER HAS BEEN CONVERTED TO THIS CONFIGURATION.

Empennage (Cont)

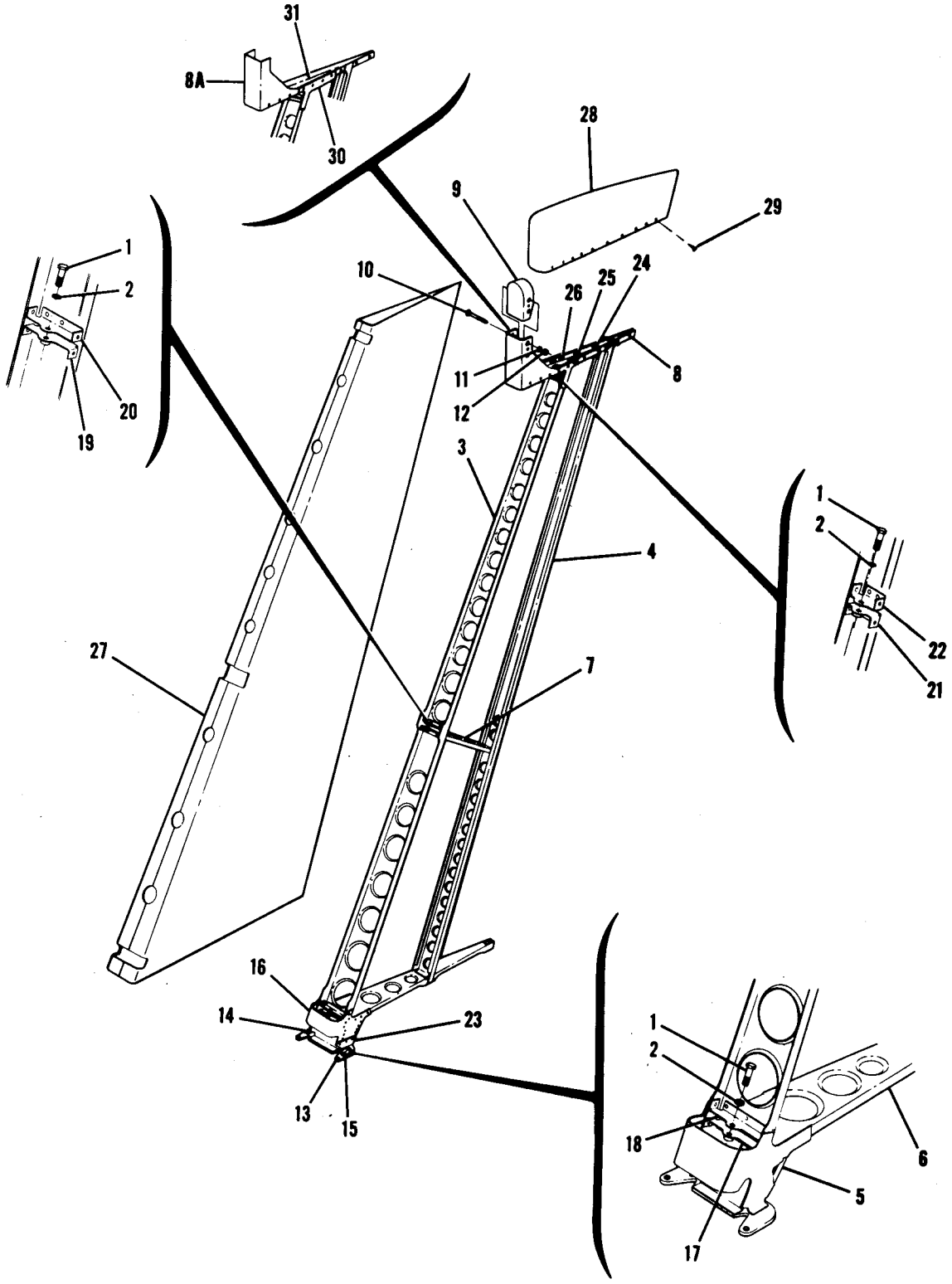

182 SERIAL 52359 & ON

Figure 12A. Swept Rudder Assembly

FIGURE AND INDEX NO.	PART NUMBER	DESCRIPTION 1 2 3 4 5 6 7	UNITS PER ASSY	USABLE ON CODE
12A-		RUDDER ASSEMBLY-SWEPT	NP	A
	1231001-6	RUDDER ASSEMBLY-SWEPT	1	C
		ATTACHING PARTS		
- 1	AN4-11A	BOLT	3	
- 2	AN960-416	WASHER	3	
	MS20365-428C	NUT	3	
		---*---		
- 3	1231015-1	SPAR-FORWARD	1	
- 4	1231015-2	SPAR-REAR	1	
- 5	1231015-3	SPAR-BELLCRANK	1	
- 6	1231016-1	RIB-LOWER	1	
- 7	1231017-1	RIB-CENTER	1	
- 8	1231011-1	RIB ASSEMBLY-RUDDER TIP	1	D
- 8A	1231033-1	RIB ASSEMBLY-RUDDER TIP	1	C
	NAS697A08K	NUTPLATE	1	C
	NAS697A08K	NUTPLATE	8	
- 9	1231020-1	WEIGHT-RUDDER BALANCE	1	A
	0733104-1	WEIGHT-RUDDER BALANCE	1	B
		ATTACHING PARTS		
- 10	AN509-10R31	SCREW	3	
- 11	AN960-10	WASHER	3	
- 12	MS20365-1032C	NUT	3	
		---*---		
- 13	1231021-1	BELLCRANK ASSEMBLY-RUDDER	1	
- 14	1231021-2	CLIP-STOP RH	1	
- 15	1231021-3	CLIP-STOP LH	1	
	0733103	BUSHING-BELLCRANK	2	
- 16	1231022-1	GUSSET-BELLCRANK	1	
- 17	1231023-16	BRACKET ASSEMBLY-LOWER RUDDER HINGE	1	
- 18	1231023-19	BRACKET-LOWER RUDDER HINGE	1	
- 19	1231023-17	BRACKET ASSEMBLY-CENTER RUDDER HINGE	1	
	NAS684A4	NUTPLATE	1	
- 20	1231023-20	BRACKET-CENTER RUDDER HINGE	1	
- 21	1231023-18	BRACKET ASSEMBLY-UPPER RUDDER HINGE	1	
	NAS684A4	NUTPLATE	1	
- 22	1231023-21	BRACKET-UPPER RUDDER HINGE	1	
- 23	1231026-1	CLIP-BELLCRANK LH	1	
	1231026-2	CLIP-BELLCRANK RH	1	
- 24	NAS696A08K	NUTPLATE	4	
- 25	NAS697A08K	NUTPLATE	4	
- 26	NAS697A08	NUTPLATE	4	
- 27	1231001-3	SKIN-RUDDER	1	
- 28	1231001-2	CAP-RUDDER TIP	1	
		ATTACHING PARTS		
- 29	NAS220-6	SCREW	20	
		---*---		
- 30	1231029-1	BRACKET-AFT LH	1	C
	1231029-2	BRACKET-AFT RH	1	C
- 31	1231032-1	TIP RIB-RUDDER AFT	1	C

182 SERIAL 52359 & ON

A---182 SERIAL 52359 THRU 52611 & 52613
B---182 SERIAL 52612 & 52614 & ON
C---182 SERIAL 18253537 & ON
D---182 SERIAL 52359 THRU 18253536

Empennage (Cont)

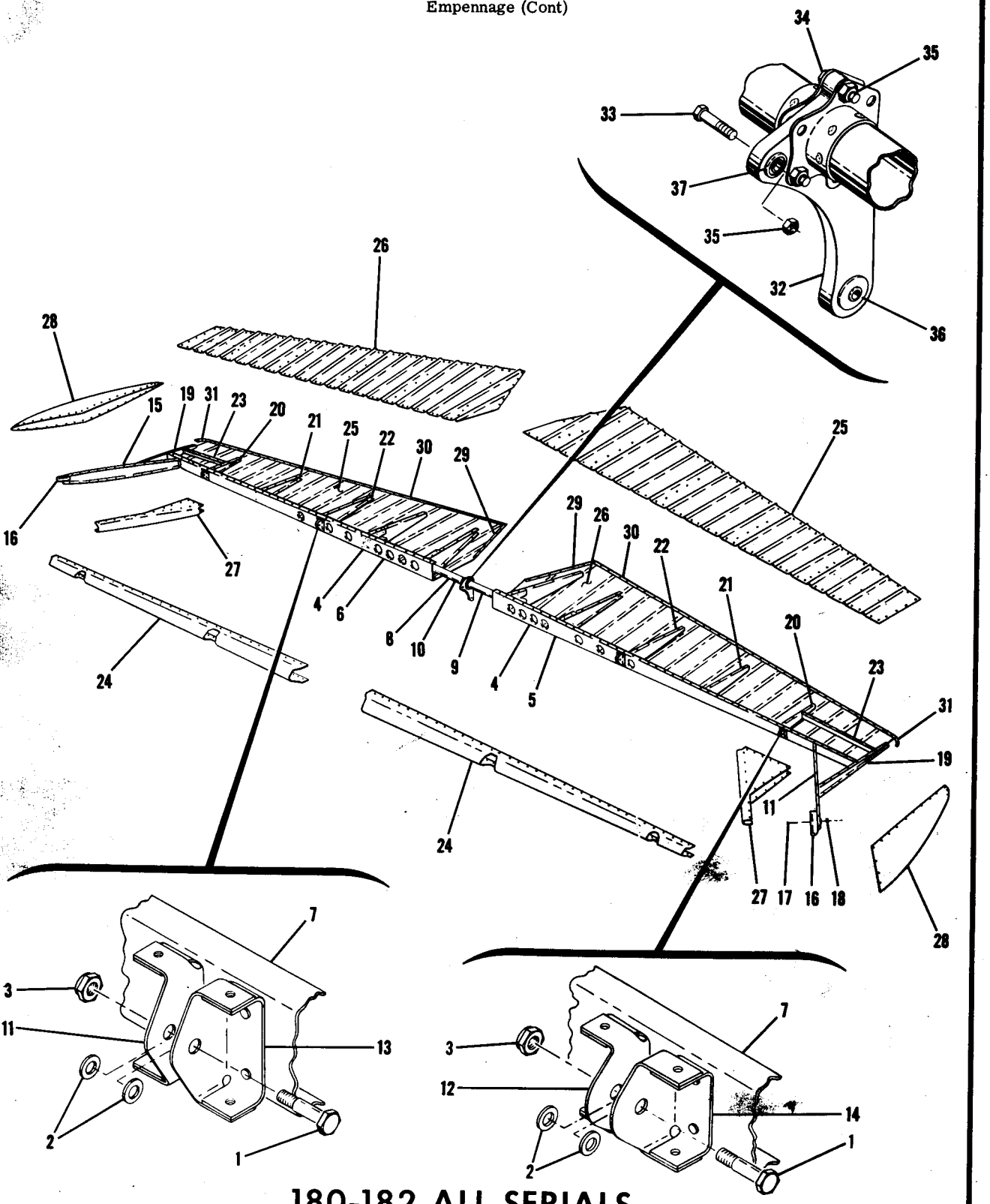

180-182 ALL SERIALS

Figure 13. Elevator Installation

FIGURE AND INDEX NO.	PART NUMBER	DESCRIPTION 1 2 3 4 5 6 7	UNITS PER ASSY	USABLE ON CODE
13-		ELEVATOR INSTALLATION	NP	
	0732000-154	ELEVATOR ASSEMBLY	2	A
	0732000-159	ELEVATOR ASSEMBLY-LH	1	C
	0734600-1	ELEVATOR ASSEMBLY-LH	1	F
	0734600-21	ELEVATOR ASSEMBLY-LH	1	G
	0732000-160	ELEVATOR ASSEMBLY-RH	1	C
	0734600-19	ELEVATOR ASSEMBLY-RH	1	F
	0734600-23	ELEVATOR ASSEMBLY-RH	1	G
		ATTACHING PARTS		
- 1	AN4-11A	BOLT	4	
- 2	AN960-416L	WASHER	8	
- 3	MS20365-428C	NUT	4	
		---*---		
- 4	0732000-153	SPAR ASSEMBLY-ELEVATOR	1	A
- 5	0734601-1	SPAR ASSEMBLY-ELEVATOR LH	1	B
- 6	0734601-2	SPAR ASSEMBLY-ELEVATOR RH	1	B
- 7	0734601-3	SPAR-ELEVATOR	1	
- 8	0734102	TUBE ASSEMBLY-TORQUE	1	A
- 9	0734110-1	TUBE ASSEMBLY-TORQUE LH	1	B
- 10	0734110-2	TUBE ASSEMBLY-TORQUE RH	1	B
- 11	0732100-4	HINGE-ELEVATOR INBOARD	1	
- 12	0732100-11	HINGE-ELEVATOR OUTBOARD	1	
- 13	0732100-10	HINGE-ELEVATOR INBOARD	1	
- 14	0732100-3	HINGE-ELEVATOR OUTBOARD	1	
- 15	0734604-1	RIB-ELEVATOR CANTED OUTBOARD	1	
- 16	0733101-2	WEIGHT-ELEVATOR BALANCE	1	E
	0733101-3	WEIGHT-ELEVATOR BALANCE	1	F
	0734610-2	WEIGHT-ELEVATOR BALANCE	1	G
		ATTACHING PARTS		
- 17	AN520-10R28	SCREW	1	E
	AN509-10R29	SCREW	1	D
- 18	NAS686A3	NUT	1	
		---*---		
- 19	0734602-1	RIB-ELEVATOR TIP	1	
- 20	0734602-4	RIB-ELEVATOR	1	
- 21	0734602-3	RIB-ELEVATOR	1	
- 22	0734602-2	RIB-ELEVATOR	1	
- 23	0734605-1	STIFFENER	1	
- 24	0734600-5	SKIN-ELEVATOR LEADING EDGE	1	
- 25	0734600-4	SKIN-ELEVATOR	1	
- 26	0734600-9	SKIN-ELEVATOR	1	
- 27	0734600-7	SKIN-ELEVATOR OUTBOARD	1	
- 28	0734608-1	TIP-ELEVATOR	1	H
	0734609-1	TIP-ELEVATOR	1	G
- 29	0734600-8	SPACER	1	
- 30	0734600-3	SPACER	1	
- 31	0734606-1	SPACER	1	
- 32	0734101	PYLON ASSEMBLY-ELEVATOR	1	A
	1234029-1	PYLON ASSEMBLY-ELEVATOR	1	B
		ATTACHING PARTS		
- 33	AN4-11A	BOLT	1	
- 34	AN4-7A	BOLT	3	
- 35	MS20365-428C	NUT	4	
		---*---		
- 36	AN200KP4	BEARING	1	
- 37	NAS506-4	BEARING	1	

180-182 ALL SERIALS

A---180 SERIAL 30000 THRU 50661
182 SERIAL 33000 THRU 52358
B---180 SERIAL 50662 & ON
182 SERIAL 52359 & ON
C---180 SERIAL 50662 THRU 50744 & 50746 THRU 50747
182 SERIAL 52359 THRU 52611 & 52613
D---180 SERIAL 50745 & 50748 & ON
182 SERIAL 52612 & 52614 & ON
E---180 SERIAL 30000 THRU 50744 & 50746 THRU 50747
182 SERIAL 33000 THRU 52611 & 52613
F---180 SERIAL 50745 & 50748 THRU 18051100
182 SERIAL 52612 & 52614 & ON
G---180 SERIAL 18051101 & ON
H---180 SERIAL 30000 THRU 18051100
182 SERIAL 33000 & ON

Fuselage

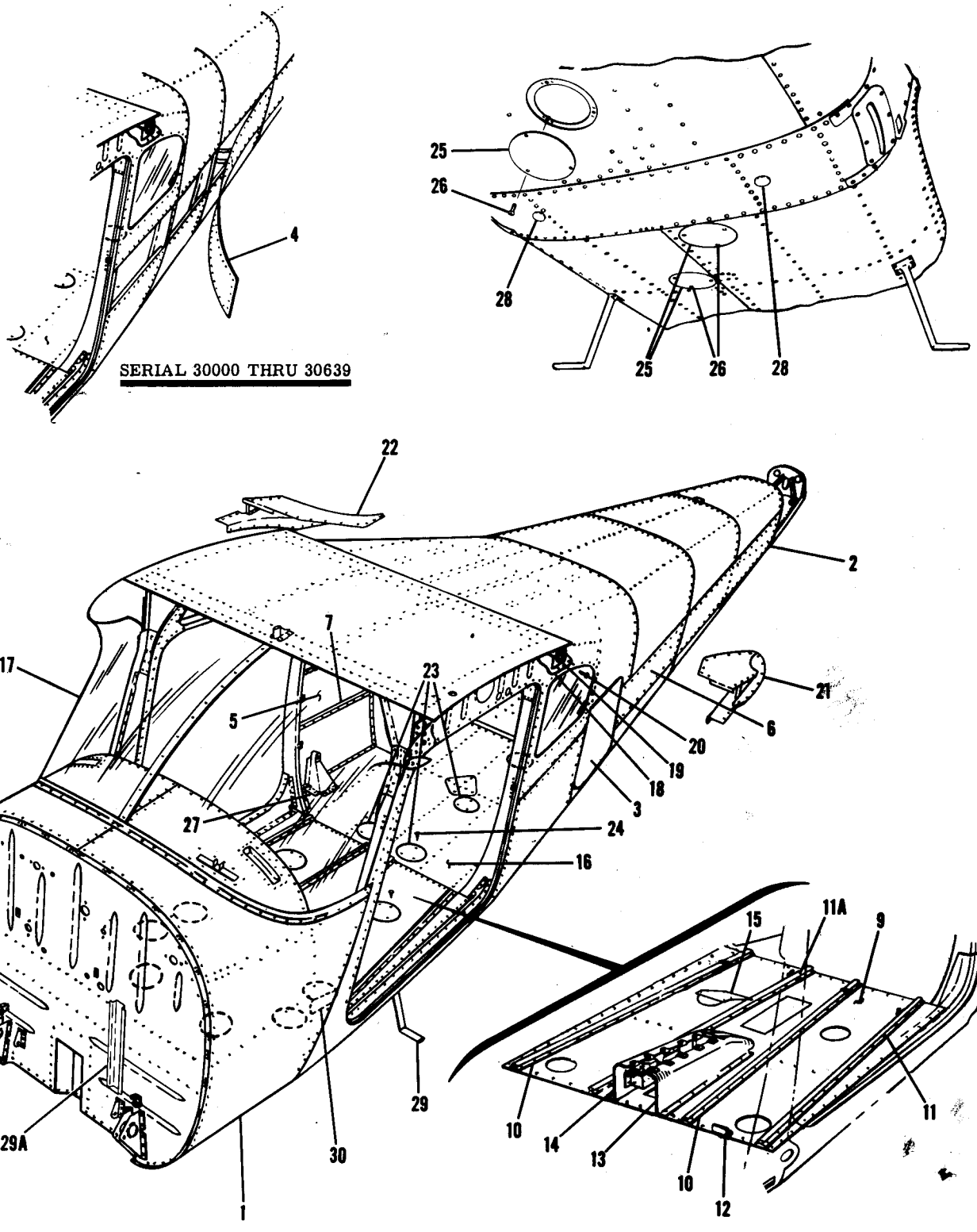

180 ALL SERIALS

Figure 14. Fuselage Assembly

FIGURE AND INDEX NO.	PART NUMBER	DESCRIPTION 1 2 3 4 5 6 7	UNITS PER ASSY	USABLE ON CODE
14-		FUSELAGE ASSEMBLY	NP	A
- 1	0791100-4	FRONT & CENTER SECTION-FUSELAGE SEE FIGURE 16	1	B
	0791100-9	FRONT & CENTER SECTION-FUSELAGE SEE FIGURE 16	1	C
	0791100-10	FRONT & CENTER SECTION-FUSELAGE SEE FIGURE 16	1	D
	0791100-14	FRONT & CENTER SECTION-FUSELAGE SEE FIGURE 16	1	L
	0791102-1	FRONT & CENTER SECTION-FUSELAGE SEE FIGURE 16	1	P
	0791102-8	FRONT & CENTER SECTION-FUSELAGE SEE FIGURE 16	1	O
- 2	0791200-1	AFT SECTION ASSEMBLY-FUSELAGE SEE FIGURE 33	1	E
	0791200-3	AFT SECTION ASSEMBLY-FUSELAGE SEE FIGURE 33	1	F
	0791200-4	AFT SECTION ASSEMBLY-FUSELAGE SEE FIGURE 33	1	G
	0791200-6	AFT SECTION ASSEMBLY-FUSELAGE SEE FIGURE 33	1	M
- 3		DOOR INSTALLATION-BAGGAGE ----SEE FIGURE 49	1	
- 4	0710020-8	PLATE-FUSELAGE SPLICE-----STA 65.33 TO 209.00	2	E
- 5	0710020-8	PLATE-FUSELAGE SPLICE RH STA 65.33 TO 209.00	1	H
- 6	0710020-15	PLATE-FUSELAGE SPLICE LH STA 108.00 TO 140.00	1	H
- 7	0511146	RETAINER-UPHOLSTERY	2	
- 8		DELETED, NOT PROCURABLE		
- 9	0511000-41	FLOORBOARD-SHEET	1	
- 10	0511000-14	RAIL-FRONT SEAT INBOARD LH & OUTBOARD RH	2	
- 11	0511000-15	RAIL-FRONT SEAT OUTBOARD LH	1	
-11A	0511000-64	RAIL-FRONT SEAT INBOARD RH	1	
- 12	0511142-2	ANGLE-CONTROL LOCK STOP	1	J
- 13	0510114-50	BULKHEAD ASSEMBLY-FUSELAGE TUNNEL AFT LH	1	
- 14	0510114-51	BULKHEAD ASSEMBLY-FUSELAGE TUNNEL AFT RH	1	
- 15	0510129-3	PLATE-FUSELAGE TUNNEL REAR	1	
- 16	0512107-25	FLOORBOARD ASSEMBLY-FUSELAGE AFT	1	E
	0512107-36	FLOORBOARD ASSEMBLY-FUSELAGE AFT	1	H
- 17		WINDSHIELD INSTALLATION SEE FIGURE 27	1	
- 18	0512146	PLATE-REINFORCEMENT LH	1	
	0512146-1	PLATE-REINFORCEMENT RH	1	
- 19	0512149-1	BRACKET-FLAP PULLEY LH	1	
	0512149-2	BRACKET-FLAP PULLEY RH	1	
		ATTACHING PARTS		
- 20	AN3-4A	BOLT	2	
	MS20365-1032C	NUT	2	
		---*---		
- 21	0512153-1	FILLET-WING LH	1	E
	0512153-7	FILLET-WING LH	1	N
	0710109-1	FILLET-WING LH	1	M
- 22	0512153-2	FILLET-WING RH	1	E
	0512153-8	FILLET-WING RH	1	N
	0710109-2	FILLET-WING RH	1	M
- 23	S-225-1	PLATE-INSPECTION OPENING COVER-----CESSNA STANDARD	3	
		ATTACHING PARTS		
- 24	49330	STUD-TRIMOUNT UC	3	
		---*---		
- 25	S-225-1	PLATE-INSPECTION OPENING COVER-----CESSNA STANDARD	3	
		ATTACHING PARTS		
- 26	S-1021Z-8-8	SCREW CESSNA STANDARD	3	
		---*---		
- 27	0511312-1	BRACKET ASSEMBLY-REAR SEAT ATTACHMENT	2	
	NAS680A3	NUTPLATE	1	
- 28	S-48143-K2215	PLUG BUTTON-----UC48143	2	
- 29	0711006-1	STEP ASSEMBLY-LH	1	
	0711006-2	STEP ASSEMBLY-RH	1	
		ATTACHING PARTS		
	AN525-416R9	SCREW	2	
	MS20365-428C	NUT	2	
		---*---		
-29A	0713119-1	CHANNEL-PARKING BRAKE STIFFENER	1	Q
- 30	S-1112-1	NAMEPLATE-M.A.A. CESSNA STANDARD	1	
		ATTACHING PARTS		
	S-1021Z-8-6	SCREW CESSNA STANDARD	4	
		---*---		
		A---180 SERIAL 30000 & ON		
		B---180 SERIAL 30000 THRU 32150		
		C---180 SERIAL 32151 THRU 32661		
		D---180 SERIAL 32662 THRU 50355		
		E---180 SERIAL 30000 THRU 30639		
		F---180 SERIAL 30640 THRU 32150		
		G---180 SERIAL 32151 THRU 50661		
		H---180 SERIAL 30640 & ON		
		J---180 SERIAL 30000 THRU 32887		
		L---180 SERIAL 50356 THRU 50661		
		M---180 SERIAL 50662 & ON		
		N---180 SERIAL 30640 THRU 50661		
		O---180 SERIAL 18050912 & ON		
		P---180 SERIAL 50662 THRU 50911		
		Q---180 SERIAL 50356 & ON		

180 ALL SERIALS

Fuselage (Cont)

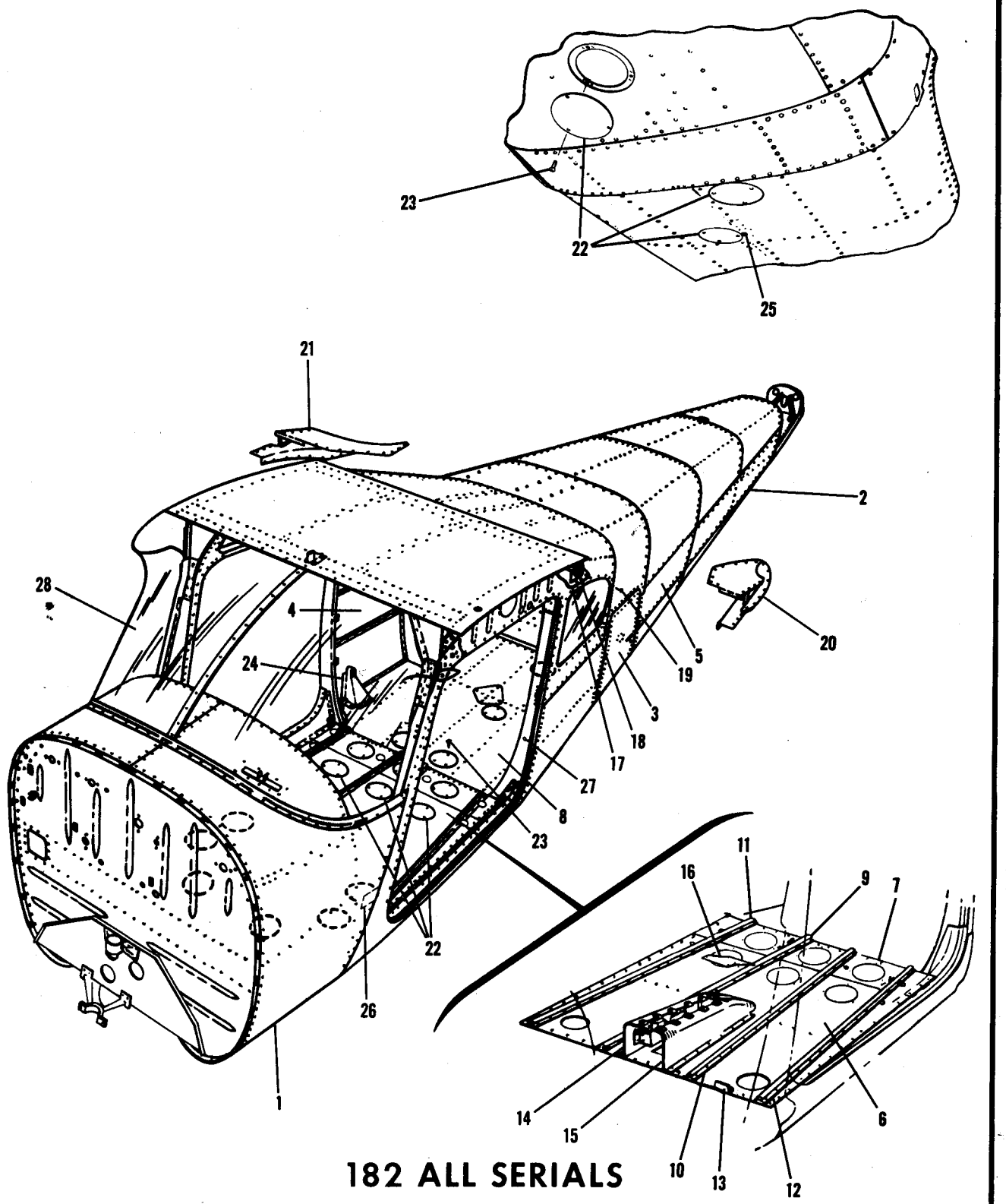

182 ALL SERIALS

Figure 15. Fuselage Assembly

FIGURE AND INDEX NO.	PART NUMBER	DESCRIPTION 1 2 3 4 5 6 7	UNITS PER ASSY	USABLE ON CODE
15-		FUSELAGE ASSEMBLY	NP	A
- 1	0791101-1	FRONT & CENTER SECTION ASSEMBLY-FUSELAGE-----SEE FIGURE 17	1	B
	0791101-5	FRONT & CENTER SECTION ASSEMBLY-FUSELAGE-----SEE FIGURE 17	1	C
	0791101-6	FRONT & CENTER SECTION ASSEMBLY-FUSELAGE-----SEE FIGURE 17	1	F
	0791101-8	FRONT & CENTER SECTION ASSEMBLY-FUSELAGE-----SEE FIGURE 17	1	G
	0791101-10	FRONT & CENTER SECTION ASSEMBLY-FUSELAGE-----SEE FIGURE 17	1	K
	0791101-14	FRONT & CENTER SECTION-FUSELAGE SEE FIGURE 17	1	L
- 2	0791201-1	AFT SECTION ASSEMBLY-FUSELAGE SEE FIGURE 33	1	H
	0791201-3	AFT SECTION ASSEMBLY-FUSELAGE SEE FIGURE 33	1	J
- 3		DOOR INSTALLATION-BAGGAGE ----SEE FIGURE 49	1	
- 4	0710020-8	PLATE-FUSELAGE SPLICE RH STA 65.33 TO 144.00	1	
- 5	0710020-15	PLATE-FUSELAGE SPLICE LH STA 108.00 TO 144.00	1	
- 6	0511100-2	FLOORBOARD-FUSELAGE CENTER SECTION FORWARD	1	
- 7	0511100-3	FLOORBOARD-FUSELAGE CENTER SECTION CENTER	1	
- 8	0512107-36	FLOORBOARD-FUSELAGE CENTER SECTION AFT	1	
- 9	0511293-2	RAIL-FRONT SEAT INBOARD RH	1	
- 10	0511293-1	RAIL-FRONT SEAT INBOARD LH **182 ALL**	1	
- 11	0511293-4	RAIL-FRONT SEAT OUTBOARD RH **SERIALS**	1	
- 12	0511293-3	RAIL-FRONT SEAT OUTBOARD LH	1	
- 13	0511142-2	ANGLE-CONTROL LOCK STOP	1	D
- 14	0510183	BULKHEAD ASSEMBLY-FUSELAGE TUNNEL AFT RH	1	
- 15	0510183-1	BULKHEAD ASSEMBLY-FUSELAGE TUNNEL AFT LH	1	
- 16	0510129-3	PLATE-AFT TUNNEL	1	
- 17	0512146	PLATE-REINFORCEMENT LH	1	
	0512146-1	PLATE-REINFORCEMENT RH	1	
- 18	0512149-1	BRACKET-FLAP PULLEY LH	1	
	0512149-2	BRACKET-FLAP PULLEY RH	1	
		ATTACHING PARTS		
- 19	AN3-4A	BOLT	2	
	MS20365-1032C	NUT	2	
		---*---		
- 20	0512153-7	FILLET-WING LH	1	H
	0710109-1	FILLET-WING LH	1	J
- 21	0512153-8	FILLET-WING RH	1	H
	0710109-2	FILLET-WING RH	1	J
- 22	S-225-1	PLATE CESSNA STANDARD	20	
		ATTACHING PARTS		
- 23	49330	STUD UC	3	
		---*---		
- 24	0511312-1	BRACKET ASSEMBLY-REAR SEAT ATTACHMENT	2	
	NAS680A3	NUTPLATE	1	
- 25	S-48143-K2215	PLUG BUTTON	2	
- 26	S-1112-1	NAMEPLATE-M.A.A.	1	
		ATTACHING PARTS		
	S-1021Z-8-6	SCREW CESSNA STANDARD	4	
		---*---		
- 27	51149	PLUG BUTTON-----UC	1	E
- 28		WINDSHIELD INSTALLATION SEE FIGURE 27	1	

A---182 SERIAL 33000 & ON
B---182 SERIAL 33000 THRU 33842
C---182 SERIAL 33843 THRU 34753
D---182 SERIAL 33000 THRU 34254
E---182 SERIAL 33843 & ON
F---182 SERIAL 34754 THRU 51556
G---182 SERIAL 51557 THRU 52358
H---182 SERIAL 33000 THRU 52358
J---182 SERIAL 52359 & ON
K---182 SERIAL 52359 THRU 53007
L---182 SERIAL 18253008 & ON

Fuselage (Cont)

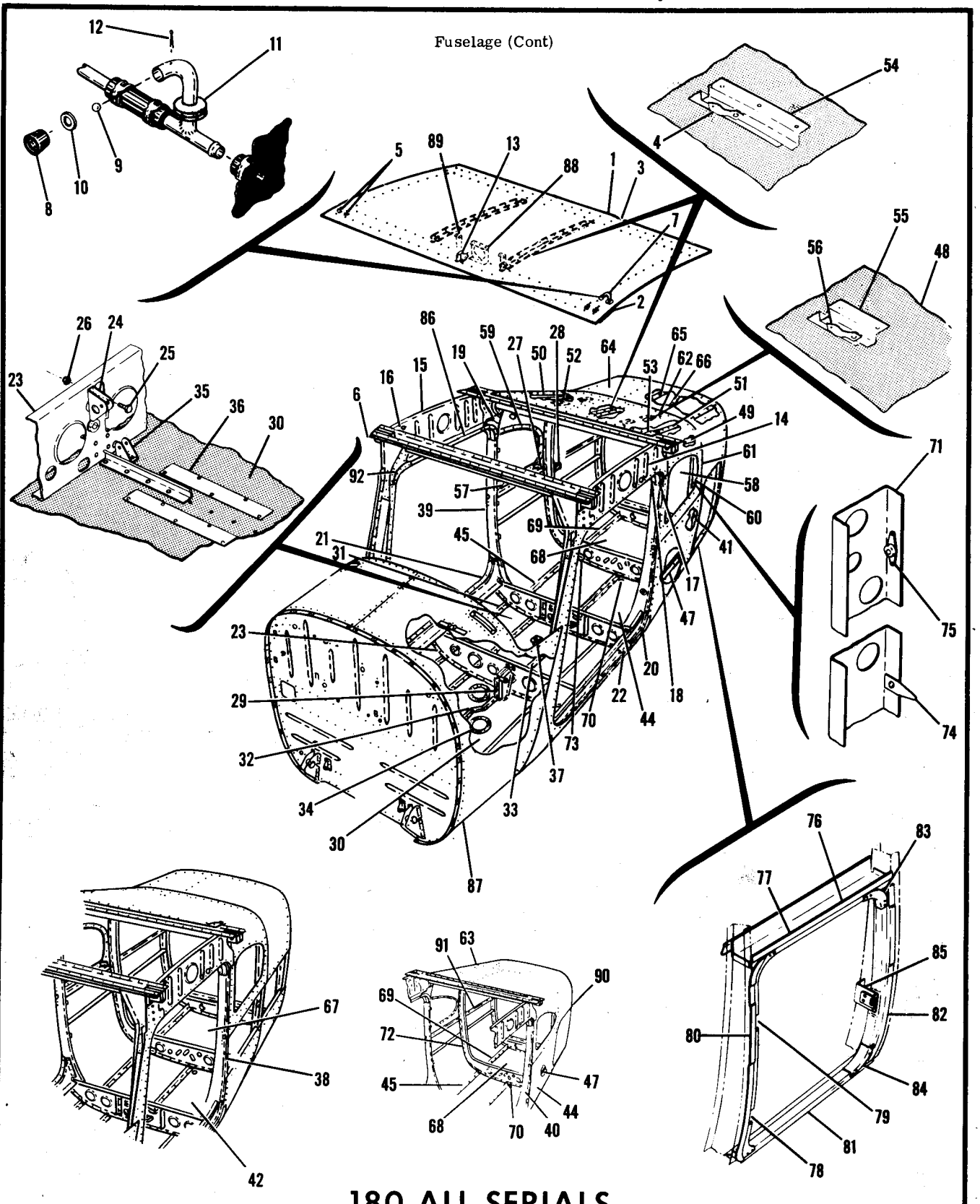

180 ALL SERIALS

Figure 16. Fuselage Front and Center Section

FIGURE AND INDEX NO.	PART NUMBER	DESCRIPTION 1 2 3 4 5 6 7	UNITS PER ASSY	USABLE ON CODE
16-	0791100-4	FRONT & CENTER SECTION ASSEMBLY-FUSELAGE	1	A
	0791100-9	FRONT & CENTER SECTION ASSEMBLY-FUSELAGE	1	B
	0791100-10	FRONT & CENTER SECTION ASSEMBLY-FUSELAGE	1	C
	0791100-14	FRONT & CENTER SECTION ASSEMBLY-FUSELAGE	1	M
	0791102-1	FRONT & CENTER SECTION ASSEMBLY-FUSELAGE	1	U
	0791102-8	FRONT & CENTER SECTION ASSEMBLY-FUSELAGE	1	V
- 1	0710000-23	TOP ASSEMBLY-CABIN	1	D
	0710000-47	TOP ASSEMBLY-CABIN — 180 ALL	1	E
	1210020-1	TOP ASSEMBLY-CABIN — SERIALS	1	Q
- 2	0710000-1	CAP-FRONT SPAR	1	R
- 3	0511114-8	SKIN ASSEMBLY-CABIN TOP	1	D
	0511114-12	SKIN ASSEMBLY-CABIN TOP	1	E
- 4	0411680	HANGER-HEADLINER	4	
- 5	NAS444-14	NUT TIN A6162-8Z-3	4	
- 6	0511000-25	RETAINER-WINDSHIELD SEE FIGURE 27	1	F
	0511000-63	RETAINER-WINDSHIELD SEE FIGURE 27	1	G
- 7	0716119-10	VENT ASSEMBLY-FUEL CELL	1	D
- 8	0716119-4	BOOT	1	
- 9	S-272-112	BALL-----CESSNA STANDARD	1	
- 10	0716119-6	WASHER	1	
- 11	MS35489-14	GROMMET	1	
- 12	MS24665-134	PIN-COTTER	1	
- 13	0411670	BRACKET-ANTENNA MAST	1	A
- 14	0511000-43	RIB-FUSELAGE FRONT & CENTER SECTION LH	1	
- 15	0511000-44	RIB-FUSELAGE FRONT & CENTER SECTION RH	1	
- 16	MS35489-4	GROMMET	2	A
- 17	0511000-6	FRAME-DOOR UPPER OUTBOARD LH	1	
	0511000-7	FRAME-DOOR UPPER OUTBOARD RH	1	
- 18	0511000-22	FRAME-DOOR UPPER INBOARD LH	1	
	0511000-23	FRAME-DOOR UPPER INBOARD RH	1	
- 19	0511000-9	GUSSET PLATE-REAR UPPER DOOR JAMB RH	1	
	0511000-8	GUSSET PLATE-REAR UPPER DOOR JAMB LH	1	
	0511151-1	GUSSET ASSEMBLY-UPHOLSTERY RETAINING RH	1	N
	0511151	GUSSET ASSEMBLY-UPHOLSTERY RETAINING LH	1	N
	0511151-7	GUSSET ASSEMBLY-UPHOLSTERY RETAINING RH	1	P
	0511151-6	GUSSET ASSEMBLY-UPHOLSTERY RETAINING LH	1	P
	0511150	BRACKET	1	Q
	0511150-1	BRACKET	1	Q
- 20	0511116	SILL ASSEMBLY-DOOR LOWER LH	1	
- 21	0511116-1	SILL ASSEMBLY-DOOR LOWER RH	1	
- 22	0511000-36	SUPPORT-LOWER DOOR SILL LH	1	
	0511000-37	SUPPORT-LOWER DOOR SILL RH	1	
- 23	0511290-3	BULKHEAD ASSEMBLY STA 44.00	1	
- 24	0411447	BRACKET-ELEVATOR PULLEY	1	
		ATTACHING PARTS		
- 25	AN520-10R7	BOLT	1	
- 26	MS20365-1032C	NUT	1	
		---*---		
- 27	0511108-18	CATCH-REAR SEAT RH	1	A
	0511108-19	CATCH-REAR SEAT LH	1	A
- 28	0511285-3	BULKHEAD ASSEMBLY-REAR SEAT CATCH LH	1	H
	0511285-4	BULKHEAD ASSEMBLY-REAR SEAT CATCH RH	1	H
- 29	0711003	BRACKET ASSEMBLY-IDLER SPROCKET	1	
	NAS680A3	NUT	1	
- 30	0791100-3	SKIN ASSEMBLY-FUSELAGE CENTER SECTION LOWER STA 27.812 TO 65.33	1	
- 31	0511000-11	STRINGER-FUSELAGE CENTER SECTION	4	
- 32	0511000-35	STRINGER-FUSELAGE CENTER SECTION	1	
- 33	0511000-38	STRINGER-FUSELAGE CENTER SECTION	1	
- 34	S-226-3	DOUBLER-INSPECTION OPENING CESSNA STANDARD	2	
	NAS395-14-3	NUT TIN 1274-8Z-3	6	
- 35	0510174	BRACKET-TAB PULLEY	1	
- 36	0511000-60	RUB STRIP	2	
	S-349	GROMMET-DRAIN CESSNA STANDARD	2	
- 37	0716101	BRACKET-FUEL SELECTOR VALVE	1	
- 38	0512124-50	BULKHEAD ASSEMBLY-FUSELAGE STA 65.33 SEE FIGURE 25	1	J
- 39	0791100-5	BULKHEAD ASSEMBLY-FUSELAGE STA 65.33 SEE FIGURE 25	1	K
	0791100-13	BULKHEAD ASSEMBLY-FUSELAGE STA 65.33 SEE FIGURE 25	1	S
- 40	0791102-4	BULKHEAD ASSEMBLY-FUSELAGE STA 65.33 SEE FIGURE 25	1	Q
- 41	0413181-2	CLIP-UPHOLSTERY RETAINING	2	
- 42	0710000-25	SKIN ASSEMBLY-FUSELAGE LOWER STA 65.33 TO 90.00	1	J

CONTINUED ON PAGES 42 & 43

FIGURE AND INDEX NO.	PART NUMBER		DESCRIPTION 1 2 3 4 5 6 7	UNITS PER ASSY	USABLE ON CODE
16- 43			DELETED		
- 44	0791102-2		SKIN ASSEMBLY-FUSELAGE LOWER STA 65.33 TO 90.00	1	
- 45	0512000-20		STRINGER-FUSELAGE LOWER	3	
- 46			DELETED		
- 47	0710025-2		STRINGER-FUSELAGE LH ONLY	1	
	0791100-2		SKIN ASSEMBLY-REAR CABIN TOP STA 65.33 TO 90.00	1	R
- 48	0710002-6		SKIN-FUSELAGE UPPER	1	
- 49	0512000-38		STIFFENER-FUSELAGE OUTBOARD UPPER LH	1	
- 50	0512000-39		STIFFENER-FUSELAGE OUTBOARD UPPER RH	1	
- 51	0512145		STIFFENER-FUSELAGE INBOARD UPPER LH	1	
- 52	0512145-1		STIFFENER-FUSELAGE INBOARD UPPER RH	1	
- 53	0512151		CLIP	2	
- 54	0411718-2		STIFFENER-FUSELAGE UPPER---- STA 65.33 TO 90.00	2	
- 55	0512000-66		BRACKET ASSEMBLY-HEADLINER WIRES	4	
- 56	0411680		HANGER-UPHOLSTERY	1	
- 57	0710106-4		RETAINER-REAR WINDOW LOWER INBOARD RH	1	
- 58	0710106-3		RETAINER-REAR WINDOW LOWER INBOARD LH	1	
	0710107-4		RETAINER-REAR WINDOW LOWER OUTBOARD RH	1	
	0710107-3		RETAINER-REAR WINDOW LOWER OUTBOARD LH	1	
- 59	0710105-4		RETAINER-REAR WINDOW UPPER RH	1	
	0710105-3		RETAINER-REAR WINDOW UPPER LH	1	
- 60	0710108-3		WINDOW-REAR	2	
- 61	S-202RB		MOULDING-REAR WINDOW CESSNA STANDARD	AR	
- 62	4600-02		DOME NUT NUS	6	
- 63	0791102-3		SKIN ASSEMBLY-REAR CABIN TOP STA 65.33 TO 108.00 SEE FIGURE 18A	1	Q
- 64	0710000-3		SKIN-FUSELAGE UPPER STA 90.00 TO 108.00	1	J
	0710000-27		SKIN-FUSELAGE UPPER STA 90.00 TO 108.00	1	L
- 65	0512000-18		STIFFENER-SKIN UPPER	4	R
- 66	0511232-4		STRAP-SHOULDER HARNESS REINFORCEMENT	2	
- 67	0710000-4		SKIN-FUSELAGE LOWER STA 90.00 TO 108.00	1	S
- 68	0710020-14		SKIN-FUSELAGE LOWER STA 90.00 TO 108.00	1	T
- 69	0710025-1		STIFFENER-SKIN LOWER	2	
- 70	S-349		SCOOP-DRAIN-----CESSNA STANDARD	1	R
- 71	0791100-6		BULKHEAD ASSEMBLY-FUSELAGE---- STA 90.00	1	R
- 72	0791102-6		BULKHEAD ASSEMBLY-FUSELAGE---- STA 90.00	1	Q
- 73	0512113-7		ANGLE-REINFORCEMENT	1	
- 74	0511176		CLIP-UPHOLSTERY RETAINING	4	
- 75	NAS680A3		NUTPLATE	1	R
	NAS697A3		NUT-ANCHOR	1	Q
	NAS697A4		NUT-ANCHOR	1	Q
	NAS395-5-3		NUT	4	Q
- 76	0711101-13		JAMB ASSEMBLY-BAGGAGE DOOR UPPER	1	R
- 77	0711101-32		JAMB ASSEMBLY-BAGGAGE DOOR UPPER	1	Q
	NAS680A08		NUTPLATE	1	
	MS20366F1032		NUTPLATE	2	
- 78	0711101-10		BRACKET-BAGGAGE DOOR LOWER HINGE	1	
- 79	0711101-11		BRACKET-BAGGAGE DOOR UPPER HINGE	1	
- 80	0711101-4	*	JAMB-BAGGAGE DOOR FORWARD	1	
- 81	0711101-8	*	JAMB-BAGGAGE DOOR LOWER	1	
- 82	0711101-6	*	JAMB-BAGGAGE DOOR AFT	1	
- 83	0711101-15		GUSSET-BAGGAGE DOOR AFT UPPER	1	
- 84	0711101-16	*	GUSSET-BAGGAGE DOOR AFT LOWER	1	
- 85	0711101-7	*	REINFORCEMENT-BAGGAGE DOOR LATCH	1	
- 86	0511153		RETAINER ASSEMBLY-HEADLINER	2	R
	0511153-5		RETAINER ASSEMBLY-HEADLINER	2	W
	0711131-1		RETAINER ASSEMBLY-HEADLINER LH	1	Y
	0711131-2		RETAINER ASSEMBLY-HEADLINER RH	1	Y
	0711131-3		RETAINER ASSEMBLY-HEADLINER LH	1	Z
	0711131-4		RETAINER ASSEMBLY-HEADLINER RH	1	Z
- 87	0791300-1		STRUCTURE ASSEMBLY-FUSELAGE FRONT SECTION SEE FIGURE 19	1	A
	0791300-11		STRUCTURE ASSEMBLY-FUSELAGE FRONT SECTION SEE FIGURE 19	1	B
	0791300-12		STRUCTURE ASSEMBLY-FUSELAGE FRONT SECTION SEE FIGURE 19	1	C
	0791300-14		STRUCTURE ASSEMBLY-FUSELAGE FRONT SECTION SEE FIGURE 20	1	M

CONTINUED ON PAGE 43

FIGURE AND INDEX NO.	PART NUMBER	DESCRIPTION 1 2 3 4 5 6 7	UNITS PER ASSY	USABLE ON CODE
16-	0791302-1	STRUCTURE ASSEMBLY-FUSELAGE FRONT SECTION SEE FIGURE 20----	1	U
	0791302-6	STRUCTURE ASSEMBLY-FUSELAGE FRONT SECTION SEE FIGURE 20----	1	V
- 88	0710104-1	BRACKET ASSEMBLY----------	1	
	NAS-395-6-3	NUT TIN A1784-6Z-3 ----------	3	
	0711101-17	CLIP ----------	2	
- 89	0511296-2	ANGLE-RH ----------	1	
	0511296-1	ANGLE-LH ----------	1	
- 90	0511145	SUPPORT-BAGGAGE SHELF----------	1	Q
- 91	0511146	RETAINER ----------	1	Q
- 92	0700105-424	GUSSET ASSEMBLY-UPHOLSTERY RETAINING RH ----------	1	X
	0700105-423	GUSSET ASSEMBLY-UPHOLSTERY RETAINING LH ----------	1	X
		A---180 SERIAL 30000 THRU 32150 NOTE. WHEN ORDERING COMPLETE FRONT & CENTER SECTION ASSEMBLY FOR AIRPLANES SERIALS 31261 THRU 32150 ALSO ORDER ONE 0511000-63 TO REPLACE 0511000-25.		
		B---180 SERIAL 32151 THRU 32661 NOTE. WHEN ORDERING COMPLETE FRONT & CENTER SECTION ASSEMBLY FOR AIRPLANES SERIAL 32488 THRU 32661 ALSO ORDER ONE 51045 PLUG BUTTON.		
		C---180 SERIAL 32662 THRU 50355		
		D---180 SERIAL 30000 THRU 32487 NOTE. ORDER THESE PARTS ONLY FOR AIRPLANES HAVING FUEL VENT IN CABIN TOP.		
		E---180 SERIAL 32488 THRU 50661 AND ALL AIRPLANES THAT DO NOT USE CABIN TOP FUEL VENT.		
		F---180 SERIAL 30000 THRU 32160 NOTE. SERIALS APPLICABLE TO DETAIL PART REPLACEMENT ONLY. FOR COMPLETE ASSEMBLY SEE CODE A ABOVE.		
		G---180 SERIAL 32161 THRU 50355 & 50662 & ON NOTE. SERIALS APPLICABLE TO DETAIL PART REPLACEMENT ONLY. FOR COMPLETE ASSEMBLY SEE CODE A ABOVE.		
		H---180 SERIAL 32151 THRU 50355 J---180 SERIAL 30000 THRU 30639 K---180 SERIAL 30640 THRU 32661 L---180 SERIAL 30640 THRU 50661 M---180 SERIAL 50356 THRU 50661 N---180 SERIAL 30000 THRU 32661 P---180 SERIAL 32662 THRU 18051019 Q---180 SERIAL 50662 & ON R---180 SERIAL 30000 THRU 50661 S---180 SERIAL 32662 THRU 50661 T---180 SERIAL 30640 & ON U---180 SERIAL 50662 THRU 50911 V---180 SERIAL 18050912 & ON W---180 SERIAL 50662 THRU 18051019 X---180 SERIAL 18051020 & ON Y---SERIAL 18051020 THRU 18051133 Z---SERIAL 18051134 & ON		
		*NOTE. PARTS MARKED * ARE SHIPPED AS LOOSE ITEMS IN 0791100-4, 0791100-9, 0791100-10, 0791100-14, & 0791102-1, ASSEMBLIES.		

Fuselage (Cont)

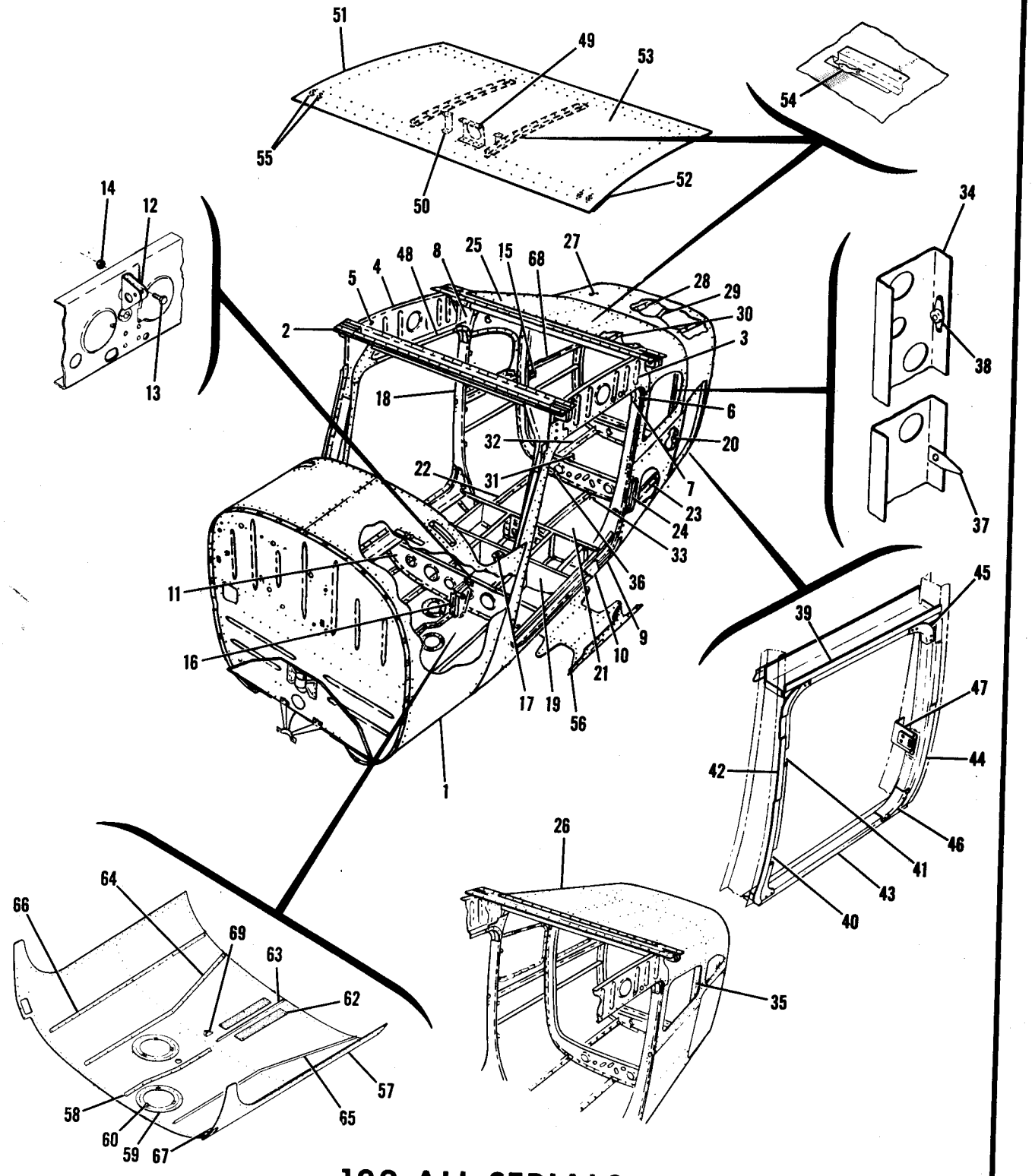

182 ALL SERIALS

Figure 17. Fuselage Front and Center Section

FIGURE AND INDEX NO.	PART NUMBER		DESCRIPTION 1 2 3 4 5 6 7	UNITS PER ASSY	USABLE ON CODE
17-	0791101-1		FRONT & CENTER SECTION ASSEMBLY-FUSELAGE	1	A
	0791101-5		FRONT & CENTER SECTION ASSEMBLY-FUSELAGE	1	B
	0791101-6	*	FRONT & CENTER SECTION ASSEMBLY-FUSELAGE	1	C
	0791101-8	*	FRONT & CENTER SECTION ASSEMBLY-FUSELAGE	1	H
	0791101-10	*	FRONT & CENTER SECTION ASSEMBLY-FUSELAGE	1	M
	0791101-14	*	FRONT & CENTER SECTION ASSEMBLY-FUSELAGE	1	N
- 1	0791301-1		STRUCTURE ASSEMBLY-FUSELAGE FRONT SEE FIGURE 21	1	A
	0791301-7		STRUCTURE ASSEMBLY-FUSELAGE FRONT SEE FIGURE 21	1	B
	0791301-9		STRUCTURE ASSEMBLY-FUSELAGE FRONT SEE FIGURE 21	1	C
	0791301-10		STRUCTURE ASSEMBLY-FUSELAGE FRONT SEE FIGURE 22	1	O
	0791301-14		STRUCTURE ASSEMBLY-FUSELAGE FRONT SEE FIGURE 22	1	N
- 2	0511000-63		RETAINER-WINDSHIELD	1	
- 3	0511000-43		RIB-FUSELAGE FRONT & CENTER SECTION LH	1	
- 4	0511000-44		RIB-FUSELAGE FRONT & CENTER SECTION RH	1	
- 5	MS35489-4		GROMMET	2	
	MS35489-16-S		GROMMET	2	
- 6	0511000-6		FRAME-DOOR UPPER OUTBOARD LH	1	
	0511000-7		FRAME-DOOR UPPER OUTBOARD RH	1	
- 7	0511000-22		FRAME-DOOR UPPER INBOARD LH **182 ALL SERIALS**	1	
	0511000-23		FRAME-DOOR UPPER INBOARD RH	1	
- 8	0511000-9		GUSSET PLATE-DOOR REAR JAMB RH	1	
	0511000-8		GUSSET PLATE-DOOR REAR UPPER JAMB LH	1	
	0511151		RETAINER-HEADLINER	1	A
	0511151-1		RETAINER-HEADLINER	1	A
	0511151-6		GUSSET ASSEMBLY	1	D
	0511151-7		GUSSET ASSEMBLY	1	D
- 9	0511116		SILL ASSEMBLY-DOOR LOWER LH	1	
	0511116-1		SILL ASSEMBLY-DOOR LOWER RH	1	
- 10	0511291-1		SUPPORT-DOOR LOWER SILL LH	1	
	0511291-2		SUPPORT-DOOR LOWER SILL RH	1	
- 11	0511290-3		BULKHEAD STA 44.00	1	
- 12	0411447		BRACKET-ELEVATOR PULLEY	1	
			ATTACHING PARTS		
- 13	AN520-10R7		BOLT	1	
- 14	MS20365-1032C		NUT	1	
			---*---		
- 15	0511285-4		BULKHEAD-REAR SEAT CATCH	1	
	NAS680A3		NUTPLATE	2	
- 16	0711003		BRACKET ASSEMBLY-IDLER SPROCKET	1	
	NAS680A3		NUTPLATE	1	
- 17	0716101		BRACKET-FUEL SELECTOR VALVE	1	
- 18	0512124-23		BULKHEAD ASSEMBLY-FUSELAGE STA 65.33 SEE FIGURE 26	1	A
	0512124-28		BULKHEAD ASSEMBLY-FUSELAGE STA 65.33 SEE FIGURE 26	1	G
	0512124-34		BULKHEAD ASSEMBLY-FUSELAGE STA 65.33 SEE FIGURE 26	1	J
- 19	0511289-4		BULKHEAD ASSEMBLY-LANDING GEAR-----SEE FIGURE 32	1	
- 20	0413181-2		CLIP-UPHOLSTERY RETAINING	8	
- 21	0791101-4		SKIN ASSEMBLY-FUSELAGE STA 65.33 TO 90.00	1	
- 22	0512000-20		STRINGER-FUSELAGE LOWER	3	
- 23	0710025-3		STRINGER-FUSELAGE LH ONLY	1	
- 24	0512001-15		ANGLE-FUSELAGE LH	1	
	0512001-16		ANGLE-FUSELAGE RH	1	
- 25	0791101-3		SKIN ASSEMBLY-FUSELAGE TOP---- SEE FIGURE 18	1	E
	0791101-7	*	SKIN ASSEMBLY-FUSELAGE TOP---- SEE FIGURE 18	1	F
- 26	0791101-11	*	SKIN ASSEMBLY-FUSELAGE TOP---- SEE FIGURE 18A	1	J
- 27	0710000-27		SKIN-FUSELAGE UPPER STA 90.00 TO 108.00	1	F
- 28	0512000-18		STIFFENER-SKIN UPPER	4	F
- 29	0511232-4		STRAP-SHOULDER HARNESS REINFORCEMENT	2	
- 30	0700108-1		BRACKET	1	
	0700108-2		BRACKET	1	
	A9028-4Z-3		NUT TIN	1	
- 31	0710020-14		SKIN-FUSELAGE LOWER STA 90.00 TO 108.00	1	
- 32	0710025-1		STIFFENER-SKIN-LOWER	2	
- 33	S-349		SCOOP-DRAIN-----CESSNA STANDARD	9	
- 34	0791100-6		BULKHEAD ASSEMBLY-FUSELAGE---- STA 90.00	1	L
- 35	0791102-6		BULKHEAD ASSEMBLY-FUSELAGE---- STA 90.00	1	J
- 36	0512113-7		ANGLE-REINFORCEMENT	1	
- 37	0511176		CLIP-UPHOLSTERY RETAINING	4	
- 38	NAS680A3		NUTPLATE	1	L
	NAS697A3		NUT-ANCHOR	1	J
	NAS697A4		NUT-ANCHOR	1	J
	NAS395-5-3		NUT	4	J
	0716128-45		DOUBLER TACTAIR INSTALLATION ONLY	1	

CONTINUED ON PAGE 46

FIGURE AND INDEX NO.	PART NUMBER		DESCRIPTION 1 2 3 4 5 6 7	UNITS PER ASSY	USABLE ON CODE
17- 39	0711101-13		JAMB ASSEMBLY-BAGGAGE DOOR UPPER	1	L
	0710115-1		JAMB ASSEMBLY-BAGGAGE DOOR UPPER	1	J
	NAS680A08		NUTPLATE	1	
	NAS680A3		NUTPLATE	2	
- 40	0711101-10		BRACKET-BAGGAGE DOOR LOWER HINGE	1	
- 41	0711101-11		BRACKET-BAGGAGE DOOR UPPER HINGE	1	
- 42	0711101-4	#	JAMB-BAGGAGE DOOR FORWARD	1	
- 43	0711101-8	#	JAMB-BAGGAGE DOOR AFT	1	
- 44	0711101-6	#	JAMB-BAGGAGE DOOR AFT	1	
- 45	0711101-15		GUSSET-BAGGAGE DOOR AFT LOWER	1	
- 46	0711101-16	#	GUSSET-BAGGAGE DOOR AFT LOWER	1	
- 47	0711101-7	#	REINFORCEMENT-BAGGAGE DOOR LATCH	1	
- 48	0511153		RETAINER ASSEMBLY-HEADLINER	2	L
	0511153-5		RETAINER ASSEMBLY-HEADLINER	2	P
	0711131-1		RETAINER ASSEMBLY-HEADLINER LH	1	R
	0711131-2		RETAINER ASSEMBLY-HEADLINER RH	1	R
- 49	0710104-1		BRACKET ASSEMBLY	1	
	NAS395-6-3		NUT TIN A1784-6Z-3	3	
- 50	0511296-2		ANGLE-RH	1	
	0511296-1		ANGLE-LH	1	
- 51	0710000-47		TOP ASSEMBLY-CABIN	1	L
	1210020-1		TOP ASSEMBLY-CABIN	1	J
- 52	0710000-1		CAP-FRONT SPAR	1	L
- 53	0511114-12		SKIN ASSEMBLY-CABIN TOP	1	L
- 54	0411680		HANGER-HEADLINER	4	
- 55	NAS444-14		NUT TIN A6162-8Z-3	4	
- 56	0511295-1		SKIN-FUSELAGE LOWER LANDING GEAR BULKHEAD	1	
- 57	0791101-2		SKIN ASSEMBLY-FUSELAGE CENTER SECTION LOWER	1	
- 58	0511000-35		STRINGER-FUSELAGE CENTER SECTION	1	
- 59	S-226-3		DOUBLER-INSPECTION OPENING CESSNA STANDARD	2	
- 60	NAS395-14-3		NUT TIN A1274-8Z-3	6	
- 61			DELETED, SEE ITEM -69		
- 62	0511000-60		RUB STRIP	2	
- 63	0511292-3		STRINGER-FUSELAGE CENTER SECTION	1	
- 64	0711109-1		STRINGER-FUSELAGE CENTER SECTION RH	1	
- 65	0711109-2		STRINGER-FUSELAGE CENTER SECTION LH	1	
- 66	0511292-2		STRINGER-FUSELAGE CENTER SECTION RH	1	
- 67	0511292-1		STRINGER-FUSELAGE CENTER SECTION LH	1	
- 68	0511146		RETAINER-UPHOLSTERY	1	
- 69	0510174		BRACKET-TAB PULLEY	1	

A---182 SERIAL 33000 THRU 33842
B---182 SERIAL 33843 THRU 34753
C---182 SERIAL 34754 THRU 51556
D---182 SERIAL 33843 THRU 18253339
E---182 SERIAL 33000 THRU 34753
F---182 SERIAL 34754 THRU 52358
G---182 SERIAL 33843 THRU 52358
H---182 SERIAL 51557 THRU 52358
J---182 SERIAL 52359 & ON
K---182 SERIAL 51557 & ON
L---182 SERIAL 33000 THRU 52358
M---182 SERIAL 52359 THRU 53007
N---182 SERIAL 18253008 & ON
O---182 SERIAL 51557 THRU 53007
P---182 SERIAL 52359 THRU 18253339
R---182 SERIAL 18253340 & ON

#NOTE. PARTS MARKED # ARE SHIPPED AS LOOSE ITEMS IN 0791101-1, 0791101-5, 0791101-6, 0791101-8, & 0791101-10 ASSEMBLIES.

*NOTE. 182 & 182 SKYLANE SPARE FRONT & CENTER SECTIONS SERIALS 34754 & ON DO NOT INCLUDE REAR WINDOWS OR WINDOW RETAINERS. WHEN WINDOWS AND/OR RETAINERS ARE REQUIRED, REFER TO FIGURES 18 & 18A FOR CORRECT PARTS BY SERIAL.

Fuselage (Cont)

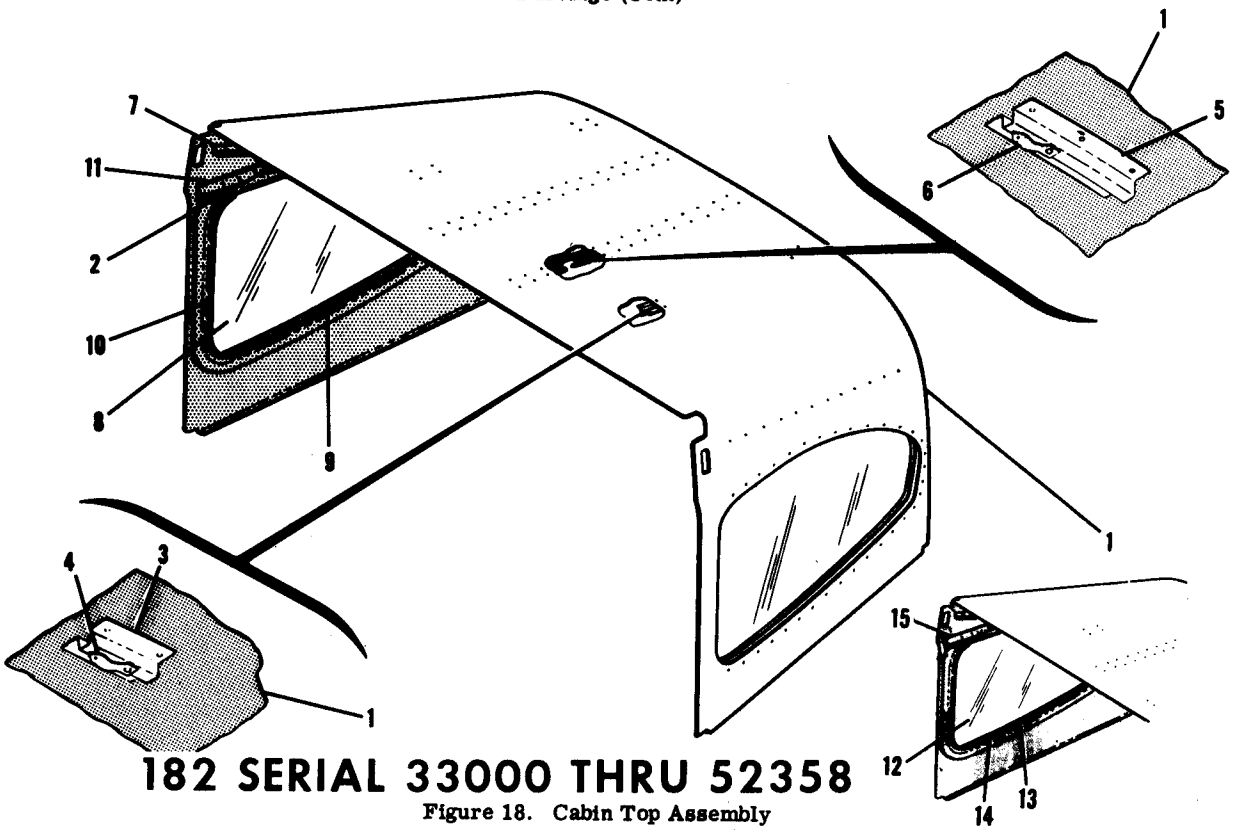

182 SERIAL 33000 THRU 52358

Figure 18. Cabin Top Assembly

FIGURE AND INDEX NO.	PART NUMBER	DESCRIPTION 1 2 3 4 5 6 7	UNITS PER ASSY	USABLE ON CODE
18-	0791101-3	SKIN ASSEMBLY-CABIN TOP	1	A
	0791101-9	SKIN ASSEMBLY-CABIN TOP	1	C
- 1	0791101-7	SKIN ASSEMBLY-CABIN TOP LESS WINDOWS & RETAINERS	1	
- 2	0511133	BRACKET	2	
- 3	0512000-66	BRACKET ASSEMBLY	4	
- 4	0411680	HANGER-UPHOLSTERY	1	
- 5	0411718-2	STIFFENER ASSEMBLY	2	
- 6	0411680	HANGER-UPHOLSTERY	2	
- 7	0512000-38	ANGLE-LH	1	
	0512000-39	ANGLE-RH	1	
- 8	0710108-3	WINDOW-----.060 THICK	2	A
	0710108-2	WINDOW-TINTED .062 THICK	2	C
	S-202R8	MOULDING CESSNA STANDARD	AR	
- 9	0710107-4	FRAME-RH	1	B
	0710107-3	FRAME-LH	1	B
- 10	0710106-4	RETAINER-WINDOW INTERIOR TRIM RH	1	B
	0710106-3	RETAINER-WINDOW INTERIOR TRIM LH	1	B
- 11	0710105-4	RETAINER-WINDOW INTERIOR TRIM UPPER RH	1	B
	0710105-3	RETAINER-WINDOW INTERIOR TRIM UPPER LH	1	B
- 12	0710108-1	WINDOW-TINTED-----.125 THICK	1	D
- 13	0710107-1	FRAME-WINDOW RH	1	D
	0710107-2	FRAME-WINDOW LH	1	D
- 14	0710106-2	RETAINER-WINDOW LOWER RH	1	D
	0710106-1	RETAINER-WINDOW LOWER LH	1	D
- 15	0710105-1	RETAINER-WINDOW UPPER RH	1	D
	0710105-2	RETAINER-WINDOW UPPER LH	1	D

A---182 SERIAL 33000 THRU 52358
B---182 SERIAL 33000 THRU 52358
182 SKYLANE SERIAL 51478 THRU 52358
C---182 SKYLANE SERIAL 51478 THRU 52358
D---182 SKYLANE SERIAL 34754 THRU 51477

Fuselage (Cont)

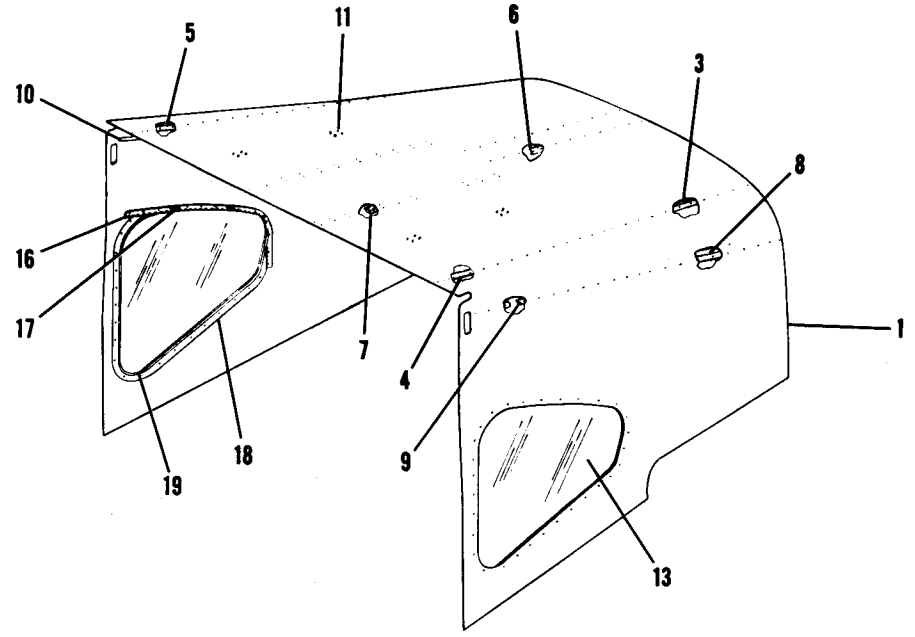

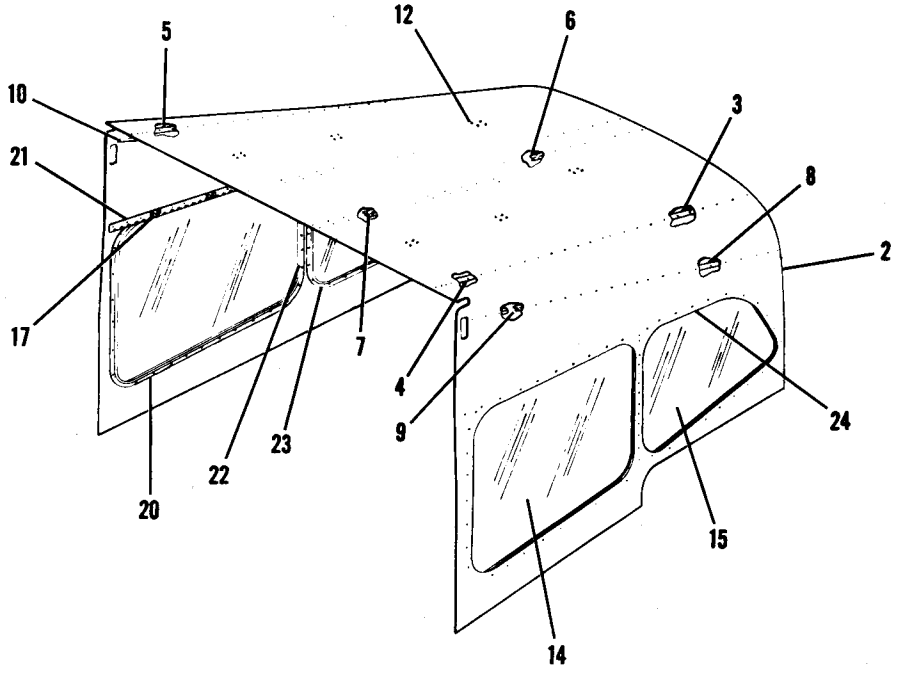

180 SERIAL 50662 & ON
182 SERIAL 52359 & ON

Figure 18A. Rear Cabin Top Skin Assembly

FIGURE AND INDEX NO.	PART NUMBER	DESCRIPTION 1 2 3 4 5 6 7	UNITS PER ASSY	USABLE ON CODE
18A-	0791102-7	SKIN ASSEMBLY-REAR CABIN TOP STA 65.33 TO 108.00 ---------	1	A
	0791101-11	SKIN ASSEMBLY-REAR CABIN TOP STA 65.33 TO 108.00 ---------	1	B
	0791101-13	SKIN ASSEMBLY-REAR CABIN TOP STA 65.33 TO 108.00 ---------	1	C
- 1	0791102-3	SKIN ASSEMBLY-REAR CABIN TOP LESS WINDOWS----------	1	A
- 2	0791101-12	SKIN ASSEMBLY-REAR CABIN TOP LESS WINDOWS----------	1	B
- 3	0711114-1	STRINGER-LH	1	
	0711114-2	STRINGER-RH	1	
- 4	0711113-1	STRINGER-LH ----------	1	
- 5	0711113-2	STRINGER-RH	1	
- 6	0711115-1	STRINGER-LH	1	
	0711115-2	STRINGER-RH ----------	1	
- 7	0711118-1	STIFFENER ASSEMBLY ----------	2	
	0411680	HANGER ----------	2	
- 8	0710024-1	STRINGER-LH ----------	1	
	0710024-2	STRINGER-RH ----------	1	
- 9	0710023-1	ANGLE-LH ----------	1	
- 10	0710023-2	ANGLE-RH ----------	1	
- 11	0512000-66	BRACKET ASSEMBLY ----------	4	A
	0411680	HANGER ----------	1	
- 12	0512000-66	BRACKET ASSEMBLY ----------	6	B
	0411680	HANGER ----------	1	
- 13	0710108-3	WINDOW-REAR----------	2	A
- 14	0700112-1	WINDOW-SIDE----------	2	B
	0700112-2	WINDOW-SIDE-----TINTED ----------	2	C
- 15	0700111-1	WINDOW-AFT ----------	2	B
	0700111-2	WINDOW-AFT TINTED----------	2	C
- 16	0710105-4	RETAINER-UPHOLSTERY RH ----------	1	A
	0710105-3	RETAINER-UPHOLSTERY LH ----------	1	A
- 17	0511133	BRACKET ----------	4	A
- 18	0710106-4	FAIRING-WINDOW LOWER RH ----------	1	A
	0710106-3	FAIRING-WINDOW LOWER LH ----------	1	A
- 19	0710107-4	RETAINER-WINDOW RH ----------	1	A
	0710107-3	RETAINER-WINDOW LH ----------	1	A
- 20	0710026-2	RETAINER-SIDE WINDOW LOWER RH ----------	1	B
	0710026-1	RETAINER-SIDE WINDOW LOWER LH ----------	1	B
	0710113-2	RETAINER-SIDE WINDOW UPHOLSTERY LOWER RH----------	1	B
	0710113-1	RETAINER-SIDE WINDOW UPHOLSTERY LOWER LH----------	1	B
- 21	0710026-4	RETAINER-SIDE WINDOW UPPER RH ----------	1	B
	0710026-3	RETAINER-SIDE WINDOW UPPER LH ----------	1	B
	0710113-4	RETAINER-SIDE WINDOW UPHOLSTERY UPPER RH----------	1	B
	0710113-3	RETAINER-SIDE WINDOW UPHOLSTERY UPPER LH----------	1	B
- 22	0710026-6	RETAINER-SIDE WINDOW AFT RH ----------	1	B
	0710026-5	RETAINER-SIDE WINDOW AFT LH ----------	1	B
- 23	0710110-2	RETAINER-REAR WINDOW LOWER RH ----------	1	B
	0710110-1	RETAINER-REAR WINDOW LOWER LH ----------	1	B
	0710112-2	RETAINER-REAR WINDOW UPHOLSTERY LOWER RH----------	1	B
	0710112-1	RETAINER-REAR WINDOW UPHOLSTERY LOWER LH----------	1	B
- 24	0710111-1	RETAINER-REAR WINDOW UPPER LH ----------	1	B
	0710111-2	RETAINER-REAR WINDOW UPPER RH ----------	1	B

180 SERIAL 50662 & ON

182 SERIAL 52359 & ON

A---180 SERIAL 50662 & ON
B---182 SERIAL 52359 & ON
C---182 SERIAL 52359 & ON
182 SKYLANE SERIAL 52359 & ON

Fuselage (Cont)

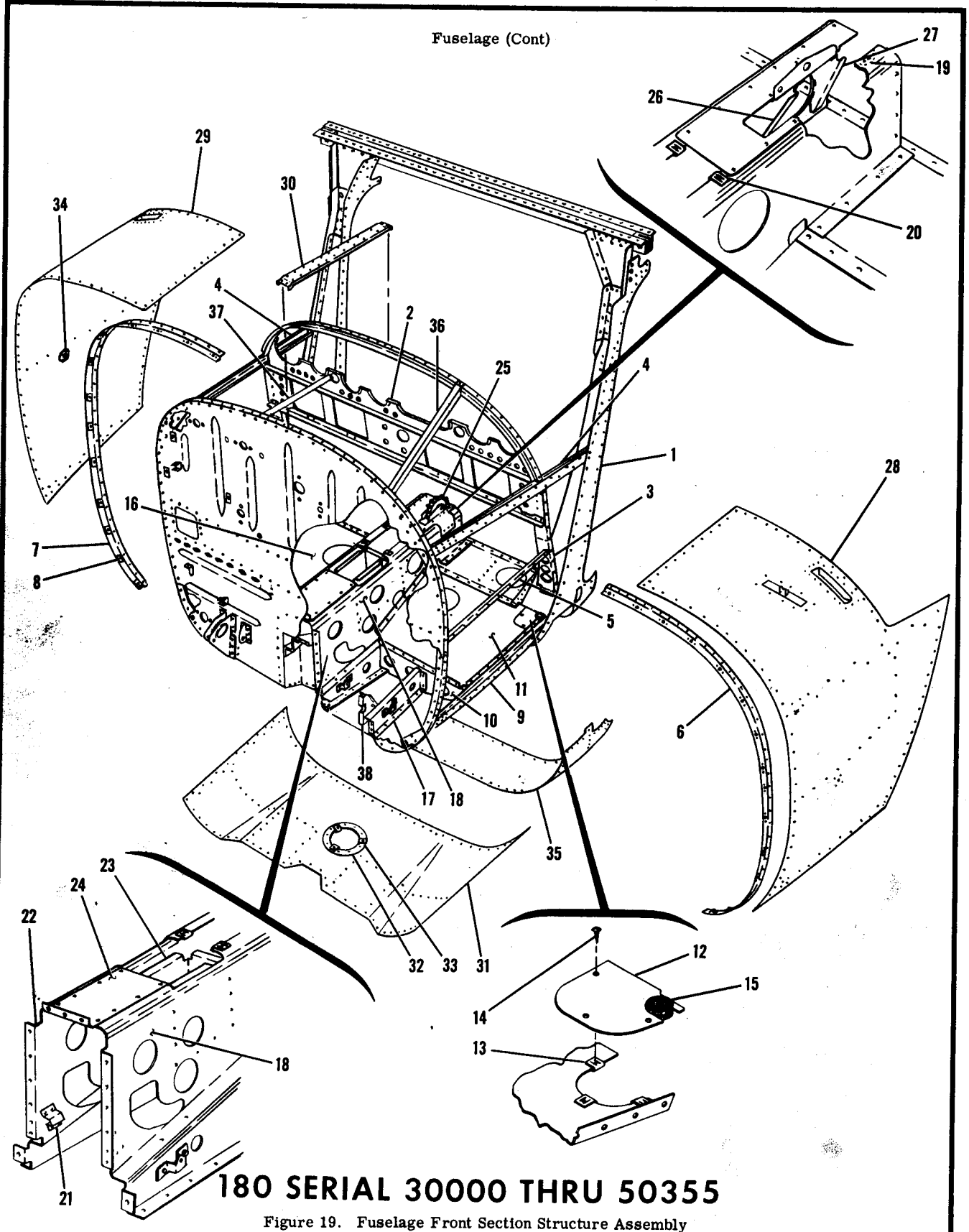

180 SERIAL 30000 THRU 50355

Figure 19. Fuselage Front Section Structure Assembly

FIGURE AND INDEX NO.	PART NUMBER	DESCRIPTION 1 2 3 4 5 6 7	UNITS PER ASSY	USABLE ON CODE
19-	0791300-1	STRUCTURE ASSEMBLY-FUSELAGE FRONT SECTION	1	A
	0791300-11	STRUCTURE ASSEMBLY-FUSELAGE FRONT SECTION	1	B
	0791300-12	STRUCTURE ASSEMBLY-FUSELAGE FRONT SECTION	1	C
	0791300-2	FIREWALL ASSEMBLY SEE FIGURE 29	1	
- 1	0791300-8	BULKHEAD ASSEMBLY-LANDING GEAR-----SEE FIGURE 23	1	
- 2		PANEL ASSEMBLY-STATIONARY ----SEE FIGURE 58	1	A
		PANEL ASSEMBLY-STATIONARY ----SEE FIGURE 59	1	B
		PANEL ASSEMBLY-STATIONARY ----SEE FIGURE 60	1	C
- 3	0713004-1	BULKHEAD-INSTRUMENT PANEL SUPPORT LH	1	
	0713004-2	BULKHEAD-INSTRUMENT PANEL SUPPORT RH	1	
- 4	0713007-1	STRINGER ASSEMBLY-ENGINE MOUNT UPPER LH	1	
	0713007-2	STRINGER ASSEMBLY-ENGINE MOUNT UPPER RH	1	
- 5	0713000-17	ANGLE	2	
- 6	0713000-61	STRIP-COWL ATTACHMENT LH	1	
- 7	0713000-62	STRIP-COWL ATTACHMENT RH	1	
- 8	A5988-8Z-3	NUT TIN	30	
- 9	0713006	STRINGER-ENGINE MOUNT LOWER	2	
- 10	0713005-3	BULKHEAD-FUSELAGE LOWER LH---- STA 8.125	1	
	0713005-4	BULKHEAD-FUSELAGE LOWER RH---- STA 8.125	1	
	0713002-4	FLOORBOARD ASSEMBLY-FUSELAGE FRONT SECTION LH	1	
- 11	0713002-1	FLOORBOARD-FUSELAGE FRONT SECTION LH	1	
- 12	0713002-3	COVER	1	
		ATTACHING PARTS		
- 13	NAS395-3-3	NUT TIN A6052-6Z-3	3	
- 14	S-1021Z-6-4	SCREW CESSNA STANDARD	3	
		---*---		
- 15	MS35489-20S	GROMMET	1	
- 16	0713002-2	FLOORBOARD-FUSELAGE FRONT SECTION RH	1	
- 17	0713008-1	BULKHEAD-RUDDER PEDAL OUTBOARD LH	1	
	0713008-2	BULKHEAD-RUDDER PEDAL OUTBOARD RH	1	
- 18	0791300-5	BULKHEAD ASSEMBLY-FRONT SECTION TUNNEL LH	1	
- 19	NAS444-2	NUTPLATE TIN A6195-6Z-3	1	
- 20	NAS395-12-3	NUT TIN A1786-8Z-3	1	
	A9031-8Z-3	NUT TIN	1	
- 21	0510128	BRACKET-RUDDER PEDAL SPRING	1	
	0411342	PLATE-CONTROL	1	
- 22	0791300-6	BULKHEAD ASSEMBLY-FRONT SECTION TUNNEL RH	1	
	NAS395-12-3	NUT TIN A1786-8Z-3	2	
	0510128	BRACKET-RUDDER PEDAL SPRING	1	
	0411342	PLATE-CONTROL	1	
- 23	0510135	SUPPORT ASSEMBLY-CONTROL TEE	1	
- 24	0510139	COVER PLATE-FUSELAGE TUNNEL FORWARD	1	
- 25	0713015-6	PLATE ASSEMBLY-COVER SEE FIGURE 110	1	
	0713023-7	BRACKET ASSEMBLY-TRIM WHEEL SEE FIGURE 110	1	
- 26	0713115-1	BRACKET-FORWARD	1	
- 27	0713116-1	BRACKET-AFT	1	
- 28	0713000-11	SKIN-FUSELAGE FRONT SECTION UPPER LH	1	D
	0713000-55	SKIN-FUSELAGE FRONT SECTION UPPER LH	1	C
- 29	0713000-12	SKIN-FUSELAGE FRONT SECTION UPPER RH	1	D
	0713000-56	SKIN-FUSELAGE FRONT SECTION UPPER RH	1	C
- 30	0713000-10	CHANNEL-SPLICE	1	
- 31	0791300-3	SKIN ASSEMBLY-FUSELAGE FRONT SECTION LOWER	1	
- 32	S-226-3	DOUBLER-INSPECTION OPENING CESSNA STANDARD	1	
- 33	NAS395-14-3	NUT TIN A1786-8Z-3	3	
- 34	S-347-1	FLANGE-PITOT STATIC LINE CESSNA STANDARD	2	
	MS20822-4D	ELBOW-PITOT STATIC LINE	1	
- 35	0713100-25	SKIN-LANDING GEAR BULKHEAD LOWER	1	
- 36	0713500-1	BRACE-INSTRUMENT PANEL	1	C
- 37	0713067-2	BRACE-INSTRUMENT PANEL SUPPORT RH	1	
- 38	0713070-20	BRACKET-PARKING BRAKE	1	

180 SERIAL 30000 THRU 50355

A---180 SERIAL 30000 THRU 32150
B---180 SERIAL 32151 THRU 32661
C---180 SERIAL 32662 THRU 50355
D---180 SERIAL 30000 THRU 32661

Fuselage (Cont)

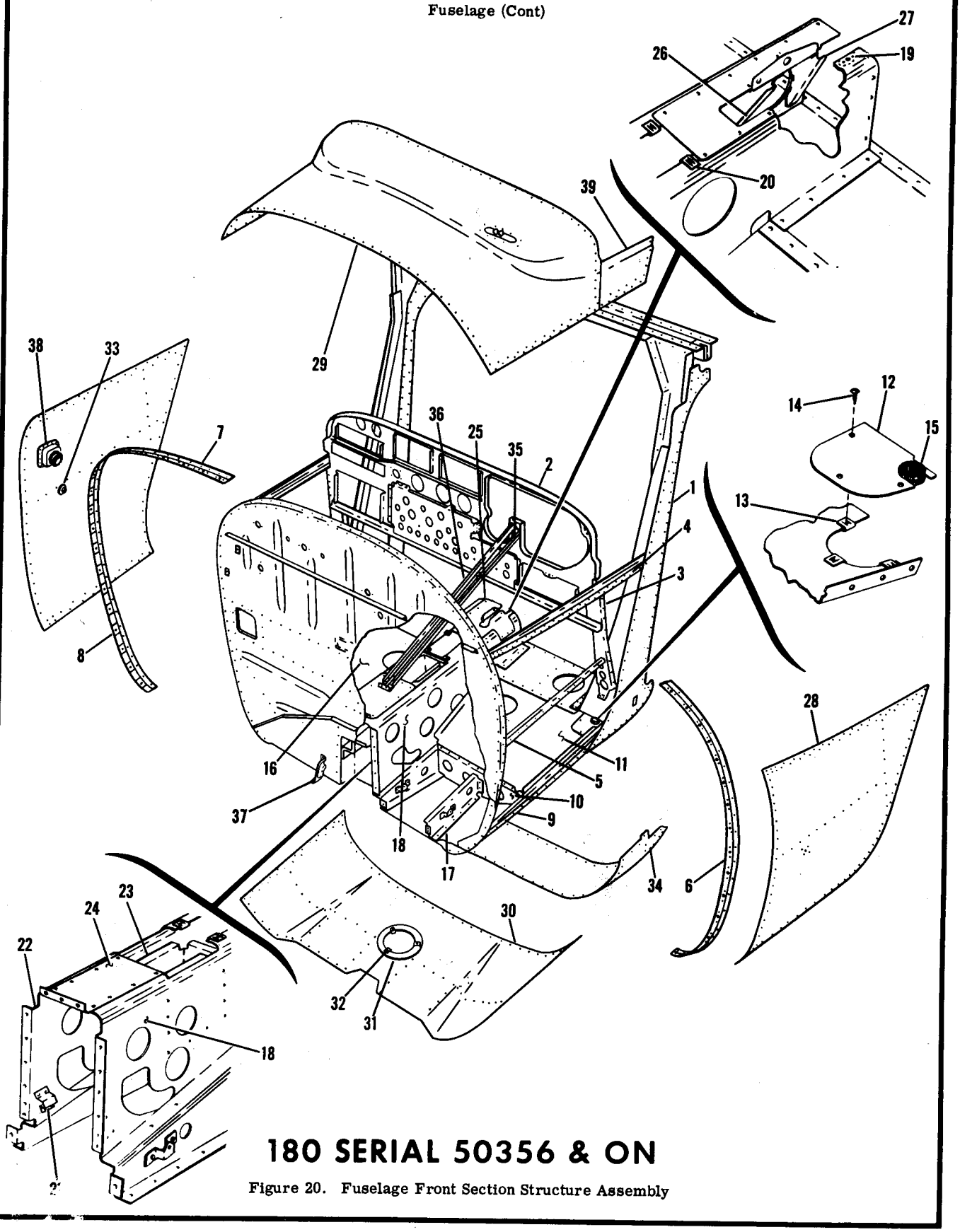

180 SERIAL 50356 & ON

Figure 20. Fuselage Front Section Structure Assembly

FIGURE AND INDEX NO.	PART NUMBER	DESCRIPTION 1 2 3 4 5 6 7	UNITS PER ASSY	USABLE ON CODE
20-	0791300-14	STRUCTURE ASSEMBLY-FUSELAGE FRONT SECTION	1	A
	0791302-1	STRUCTURE ASSEMBLY-FUSELAGE FRONT SECTION	1	C
	0791302-6	STRUCTURE ASSEMBLY-FUSELAGE FRONT SECTION	1	D
	0791300-2	FIREWALL ASSEMBLY SEE FIGURE 29	1	A
	0791302-2	FIREWALL ASSEMBLY SEE FIGURE 29	1	C
	0791302-5	FIREWALL ASSEMBLY SEE FIGURE 29	1	D
- 1	0791300-8	BULKHEAD ASSEMBLY-LANDING GEAR-----SEE FIGURE 23	1	A
	0791302-4	BULKHEAD ASSEMBLY-LANDING GEAR-----SEE FIGURE 23	1	B
- 2	0713501-1	PANEL ASSEMBLY-STATIONARY ----SEE FIGURE 63	1	C
	0713125-1	PANEL ASSEMBLY-STATIONARY ----SEE FIGURE 63A	1	D
- 3	0713105-1	BULKHEAD-INSTRUMENT PANEL SUPPORT LH	1	
	0713105-2	BULKHEAD-INSTRUMENT PANEL SUPPORT RH	1	
- 4	0713007-7	STRINGER ASSEMBLY-ENGINE MOUNT UPPER LH	1	
	0713007-8	STRINGER ASSEMBLY-ENGINE MOUNT UPPER RH	1	
- 5	0713100-9	ANGLE	2	
- 6	0713100-23	STRIP-COWLING ATTACHMENT LH ----180 SERIAL	1	C
	0753009-1	STRIP-COWLING ATTACHMENT LH --50356 & ON	1	D
- 7	0713100-24	STRIP-COWLING ATTACHMENT RH	1	C
	0753009-2	STRIP-COWLING ATTACHMENT RH	1	D
- 8	A5988-8Z-3	NUT TIN	15	C
	4002-244-16	RECEPTACLE-COWLING ATTACHMENT CLC	18	D
- 9	0713006	STRINGER ASSEMBLY-ENGINE MOUNT LOWER	2	
- 10	0713005-3	BULKHEAD-FUSELAGE LOWER LH---- STA 8.125	1	
	0713005-4	BULKHEAD-FUSELAGE LOWER RH---- STA 8.125	1	
	0713002-4	FLOORBOARD ASSEMBLY-FUSELAGE FRONT SECTION LH	1	
- 11	0713002-1	FLOORBOARD	1	
- 12	0713002-3	COVER	1	
		ATTACHING PARTS		
- 13	NAS395-3-3	NUT TIN A6052-6Z-3	3	
- 14	S-1021Z-6-4	SCREW CESSNA STANDARD	3	
		---*---		
- 15	MS35489-20S	GROMMET	1	
- 16	0713002-2	FLOORBOARD-FUSELAGE FRONT SECTION RH	1	
- 17	0713008-1	BULKHEAD-RUDDER PEDAL OUTBOARD LH	1	
	0713008-2	BULKHEAD-RUDDER PEDAL OUTBOARD RH	1	
- 18	0791300-5	BULKHEAD ASSEMBLY-FRONT SECTION TUNNEL	1	
- 19	NAS444-2	NUTPLATE TIN A6195-6Z-3	1	
- 20	NAS395-12-3	NUT TIN A1786-8Z-3	1	
- 21	0510128	BRACKET-RUDDER PEDAL SPRING	1	
	0411342	PLATE-CONTROL	1	
- 22	0791300-6	BULKHEAD ASSEMBLY-FRONT SECTION TUNNEL RH	1	
	NAS395-12-3	NUT TIN A1786-8Z-3	2	
	0510128	BRACKET-RUDDER PEDAL SPRING	1	
	0411342	PLATE-CONTROL	1	
- 23	0510135	SUPPORT ASSEMBLY-CONTROL TEE	1	
- 24	0510139	COVER PLATE-FUSELAGE TUNNEL FORWARD	1	
- 25	0713015-6	PLATE ASSEMBLY-COVER SEE FIGURE 110	1	
	0713023-7	BRACKET ASSEMBLY-----SEE FIGURE 110	1	
- 26	0713115-1	BRACKET-FORWARD	1	
- 27	0713116-1	BRACKET-AFT	1	
- 28	0713100-16	SKIN-FORWARD FUSELAGE LH	1	
	0713100-17	SKIN-FORWARD FUSELAGE RH	1	C
	0713100-30	SKIN-FORWARD FUSELAGE RH	1	D
- 29	0713100-5	SKIN-DECK	1	
- 30	0791300-3	SKIN ASSEMBLY-FUSELAGE FRONT SECTION LOWER	1	A
	0791302-3	SKIN ASSEMBLY-FUSELAGE FRONT SECTION LOWER	1	B
- 31	S-226-3	DOUBLER-INSPECTION OPENING CESSNA STANDARD	1	
- 32	NAS395-14-3	NUT TIN A1786-8Z-3	3	
- 33	S-347-1	FLANGE-PITOT STATIC LINE CESSNA STANDARD	2	
	MS20822-4D	ELBOW	2	
- 34	0713100-25	SKIN-LANDING GEAR BULKHEAD LOWER	1	
- 35	0713506-1	BRACE-INSTRUMENT PANEL	1	
- 36	0713506-2	BRACE-INSTRUMENT PANEL	1	
- 37	0752017-1	BRACKET ASSEMBLY-LH	1	C
	0752017-2	BRACKET ASSEMBLY-RH	1	C
	0752033-1	BRACKET ASSEMBLY-LH	1	D
	0752033-2	BRACKET ASSEMBLY-RH	1	D
- 38	0713135-1	DOOR ASSEMBLY-AIR VENT	1	D
	0713139-1	INLET ASSEMBLY-AIR VENT	1	D
	0713140-1	SEAL-AIR VENT INLET	1	D
- 39	0713100-3	SKIN-RETAINER LH	1	
	0713100-4	SKIN-RETAINER RH	1	

A---180 SERIAL 50356 THRU 50661
B---180 SERIAL 50662 & ON
C---180 SERIAL 50662 THRU 50911
D---180 SERIAL 18050912 & ON

Fuselage (Cont)

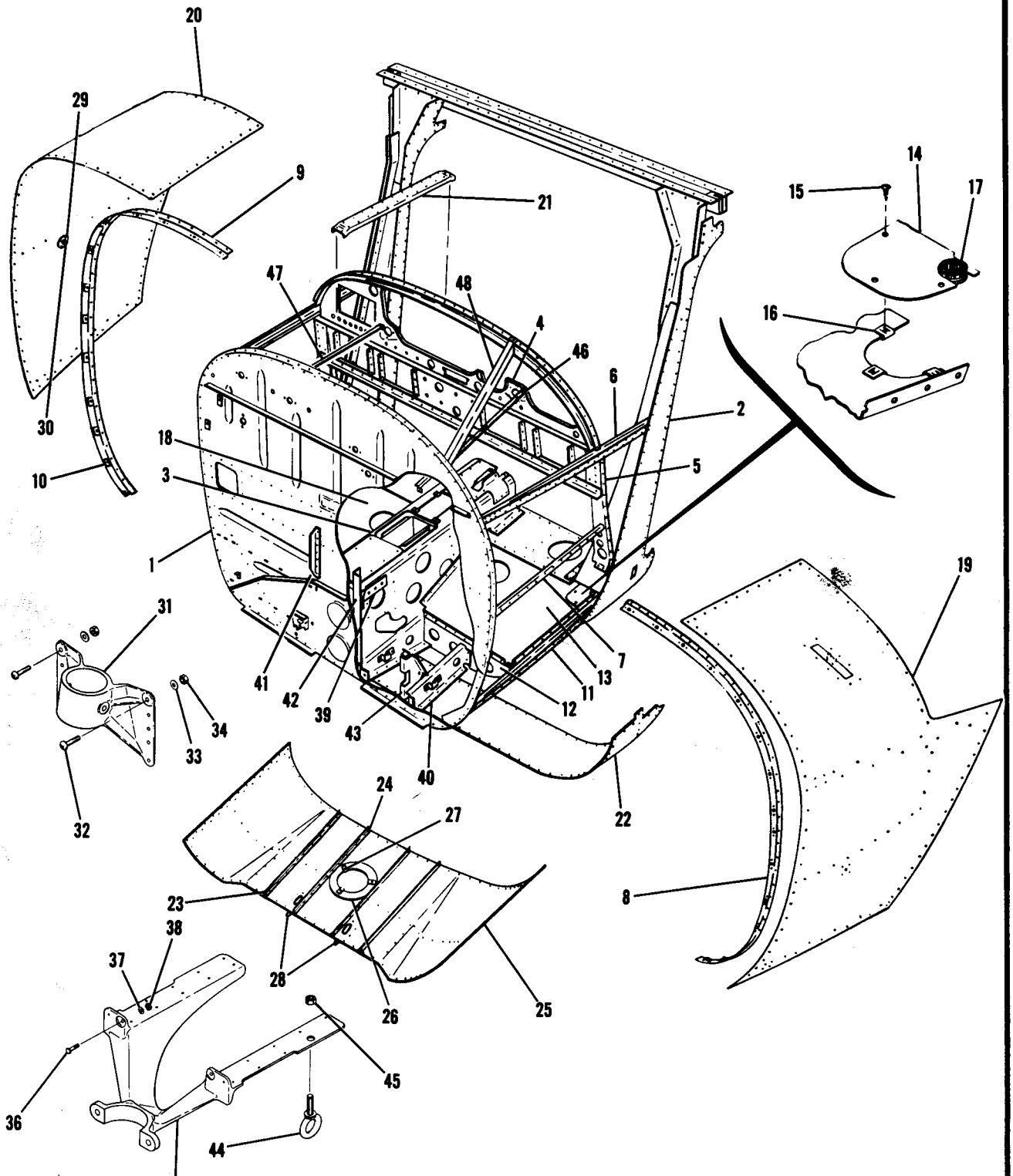

182 SERIAL 33000 THRU 51556

Figure 21. Fuselage Front Section Structure Assembly

FIGURE AND INDEX NO.	PART NUMBER	DESCRIPTION 1 2 3 4 5 6 7	UNITS PER ASSY	USABLE ON CODE
21-	0791301-1	STRUCTURE ASSEMBLY-FUSELAGE FRONT SECTION	NP	A
	0791301-7	STRUCTURE ASSEMBLY-FUSELAGE FRONT SECTION	NP	B
	0791301-9	STRUCTURE ASSEMBLY-FUSELAGE FRONT SECTION	NP	C
- 1	0791301-2	FIREWALL ASSEMBLY SEE FIGURE 30	1	
- 2	0513007-11	BULKHEAD ASSEMBLY-FRONT DOORPOST SEE FIGURE 24	1	
- 3	0791301-4	TUNNEL ASSEMBLY-FUSELAGE FORWARD SEE FIGURE 28	1	D
	0791301-8	TUNNEL ASSEMBLY-FUSELAGE FORWARD SEE FIGURE 28	1	C
- 4		PANEL ASSEMBLY-STATIONARY INSTRUMENT SEE FIGURE 59	1	A
	0713214-3	PANEL ASSEMBLY-STATIONARY INSTRUMENT SEE FIGURE 60	1	E
- 5	0713004-1	BULKHEAD-INSTRUMENT PANEL SUPPORT LH	1	
	0713004-2	BULKHEAD-INSTRUMENT PANEL SUPPORT RH	1	
- 6	0713007-1	STRINGER ASSEMBLY-ENGINE MOUNT UPPER LH	1	
	0713007-2	STRINGER ASSEMBLY-ENGINE MOUNT UPPER RH	1	
- 7	0713000-17	ANGLE	2	
- 8	0713000-61	STRIP-COWL ATTACHMENT LH **182 SERIAL 33000**	1	
- 9	0713000-62	STRIP-COWL ATTACHMENT RH **THRU 51556**	1	
- 10	A5988-8Z-3	NUT TIN	30	
- 11	0713006	STRINGER-ENGINE MOUNT LOWER	2	
- 12	0713005-3	BULKHEAD-FUSELAGE LOWER LH---- STA 8.125	1	
	0713005-4	BULKHEAD-FUSELAGE LOWER LH---- STA 8.125	1	
	0713002-7	FLOORBOARD ASSEMBLY-FUSELAGE FRONT SECTION LH	1	
- 13	0713002-5	FLOORBOARD-FUSELAGE FRONT SECTION LH	1	
- 14	0713002-3	COVER		
		ATTACHING PARTS		
- 15	S-1021Z-6-4	SCREW CESSNA STANDARD	3	
- 16	NAS395-3-3	NUT TIN A6052-6Z-3	3	
		---*---		
- 17	MS35489-20S	GROMMET	1	
- 18	0713002-6	FLOORBOARD-FUSELAGE FRONT SECTION RH	1	
- 19	0713000-11	SKIN-FUSELAGE FRONT SECTION UPPER LH	1	A
	0713000-55	SKIN-FUSELAGE FRONT SECTION UPPER LH	1	E
- 20	0713000-12	SKIN-FUSELAGE FRONT SECTION UPPER RH	1	A
	0713000-56	SKIN-FUSELAGE FRONT SECTION UPPER RH	1	E
- 21	0713000-10	CHANNEL-SPLICE	1	
- 22	0713100-26	SKIN-DOOR POST BULKHEAD LOWER	1	
- 23	0513000-9	ANGLE-RH	1	
	0513000-10	ANGLE-LH	1	
- 24	0513038-4	ANGLE-TUNNEL REINFORCEMENT RH	1	
	0513038-3	ANGLE-TUNNEL REINFORCEMENT LH	1	
- 25	0791301-5	SKIN-FUSELAGE FRONT SECTION LOWER	1	
- 26	S-226-3	DOUBLER-INSPECTION OPENING CESSNA STANDARD	1	
- 27	NAS395-14-3	NUT TIN A1774-8Z-3	3	
- 28	0543015-6	BOOT-NOSE WHEEL STEERING ROD	2	
	0543026-1	DOUBLER-NOSE WHEEL STEERING ROD OPENING	2	
- 29	S-347-1	FLANGE-PITOT STATIC LINE CESSNA STANDARD	2	
- 30	MS20822-4D	ELBOW-PITOT STATIC LINE	2	
- 31	0543013-1	FITTING-NOSE GEAR UPPER	1	
		ATTACHING PARTS		
- 32	NAS222-17	SCREW	2	
- 33	AN960-416	WASHER	2	
- 34	MS20365-428C	NUT	2	
		---*---		
- 35	0543016-1	FITTING-NOSE GEAR LOWER	1	
		ATTACHING PARTS		
- 36	AN3-5A	BOLT	2	
- 37	AN960-10	WASHER	2	
- 38	MS20365-1032C	NUT	2	
		---*---		
- 39	0713059-1	FITTING-NOSE GEAR SUPPORT LH	1	
	0713059-2	FITTING-NOSE GEAR SUPPORT RH	1	
- 40	0713008-1	BULKHEAD-RUDDER OUTBOARD LH	1	
	0713008-2	BULKHEAD-RUDDER OUTBOARD RH	1	
- 41	0513049-4	ANGLE	2	
- 42	0713053-3	ANGLE-LH	1	
	0713053-4	ANGLE-RH	1	

CONTINUED ON PAGE 56

FIGURE AND INDEX NO.	PART NUMBER	DESCRIPTION 1 2 3 4 5 6 7	UNITS PER ASSY	USABLE ON CODE
21- 43	0713070-20	BRACKET ASSEMBLY-PARKING BRAKE SUPPORT	1	B
- 44	0422344	RING-MOORING	1	
		ATTACHING PARTS		
- 45	MS20365-524C	NUT	1	
		---*---		
- 46	0713067-1	BRACE-INSTRUMENT PANEL LH	1	B
- 47	0713067-2	BRACE-INSTRUMENT PANEL RH	1	E
- 48	0713500-1	BRACE-INSTRUMENT PANEL	1	C
		A---182 SERIAL 33000 THRU 33842		
		B---182 SERIAL 33843 THRU 34753		
		C---182 SERIAL 34754 THRU 51556		
		D---182 SERIAL 33000 THRU 34753		
		E---182 SERIAL 33843 THRU 51556		

FIGURE AND INDEX NO.	PART NUMBER	DESCRIPTION 1 2 3 4 5 6 7	UNITS PER ASSY	USABLE ON CODE
22-	0791301-10	STRUCTURE ASSEMBLY-FUSELAGE FRONT SECTION	1	A
	0791301-12	STRUCTURE ASSEMBLY-FUSELAGE FRONT SECTION	1	E
	0791301-14	STRUCTURE ASSEMBLY-FUSELAGE FRONT SECTION	1	F
	0791301-2	FIREWALL ASSEMBLY SEE FIGURE 30	1	G
	0791301-13	FIREWALL ASSEMBLY SEE FIGURE 30	1	F
- 1	0513007-20	BULKHEAD ASSEMBLY-FRONT DOOR POST SEE FIGURE 24	1	A
	0513007-24	BULKHEAD ASSEMBLY-FRONT DOOR POST SEE FIGURE 24	1	B
- 2	0713501-1	PANEL ASSEMBLY-STATIONARY INSTRUMENT SEE FIGURE 63	1	E
	0713125-1	PANEL ASSEMBLY-STATIONARY INSTRUMENT SEE FIGURE 63A	1	F
- 3	0791301-8	TUNNEL ASSEMBLY-FUSELAGE FORWARD SEE FIGURE 28	1	
- 4	0713105-1	BULKHEAD-INSTRUMENT PANEL SUPPORT LH	1	
	0713105-2	BULKHEAD-INSTRUMENT PANEL SUPPORT RH	1	
- 5	0713007-7	STRINGER ASSEMBLY-ENGINE MOUNT UPPER LH	1	
	0713007-8	STRINGER ASSEMBLY-ENGINE MOUNT UPPER RH	1	
- 6	0713100-9	ANGLE	2	
- 7	0713100-23	STRIP-COWL ATTACHMENT LH	1	E
	0753009-1	STRIP-COWL ATTACHMENT LH	1	F
- 8	0713100-24	STRIP-COWL ATTACHMENT RH	1	E
	0753009-2	STRIP-COWL ATTACHMENT RH	1	F
- 9	A5988-8Z-3	NUT TIN	15	E
	4002-244-16	RECEPTACLE-COWL ATTACHMENT---- CLC	18	F
- 10	0713006	STRINGER-ENGINE MOUNT LOWER	2	
- 11	0713005-3	BULKHEAD-FUSELAGE LOWER LH---- STA 8.125	1	
	0713005-4	BULKHEAD-FUSELAGE LOWER RH---- STA 8.125	1	
	0713002-7	FLOORBOARD ASSEMBLY-FUSELAGE FRONT SECTION LH	1	
- 12	0713002-5	FLOORBOARD-FUSELAGE FRONT SECTION LH	1	
- 13	0713002-3	COVER	1	
		ATTACHING PARTS		
- 14	NAS395-3-3	NUT TIN A6052-6Z-3	3	
- 15	S-1021Z-6-4	SCREW CESSNA STANDARD	3	
		---*---		
- 16	MS35489-20S	GROMMET	1	
- 17	0713002-6	FLOORBOARD-FUSELAGE FRONT SECTION RH	1	
- 18	0713100-5	SKIN-DECK	1	
- 19	0713100-6	SKIN-FORWARD FUSELAGE LH	1	
- 20	0713100-7	SKIN-FORWARD FUSELAGE RH	1	E
	0713100-31	SKIN-FORWARD FUSELAGE RH	1	F
- 21	0791301-5	SKIN ASSEMBLY-FUSELAGE FRONT SECTION LOWER	1	
- 22	S-226-3	DOUBLER CESSNA STANDARD	1	
- 23	NAS395-14-3	NUT TIN A1774-8Z-3	3	
- 24	0513000-9	ANGLE-RH	1	
	0513000-10	ANGLE-LH	1	
- 25	0513038-4	ANGLE-TUNNEL REINFORCEMENT RH	1	
	0513038-3	ANGLE-TUNNEL REINFORCEMENT LH	1	
- 26	0543027-2	BOOT ASSEMBLY-STEERING LINKAGE RH	1	
- 27	0543027-3	BOOT ASSEMBLY-STEERING LINKAGE LH	1	
- 28	S-347-1	FLANGE-PITOT STATIC LINE CESSNA STANDARD	2	
-28A	0713100-3	SKIN-RETAINER LH	1	
	0713100-4	SKIN-RETAINER RH	1	

182 SERIAL 51557 & ON

CONTINUED ON PAGES 57 & 58

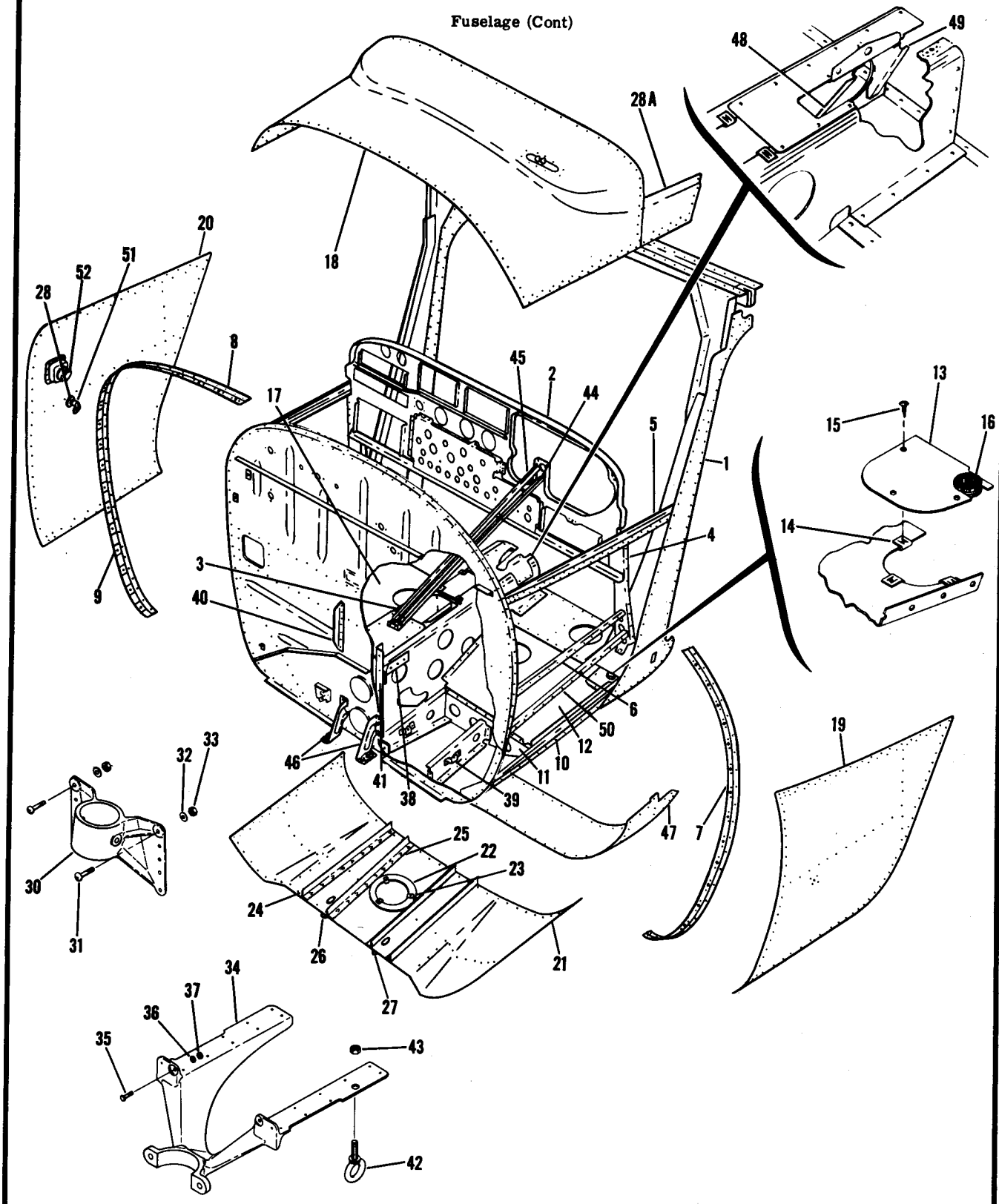

182 SERIAL 51557 & ON

Figure 22. Fuselage Front Section Structure Assembly

FIGURE AND INDEX NO.	PART NUMBER	DESCRIPTION 1 2 3 4 5 6 7	UNITS PER ASSY	USABLE ON CODE
22- 29		DELETED, REPLACED BY ITEM-51 BELOW		
- 30	0543013-1	FITTING-NOSE GEAR UPPER	1	
		ATTACHING PARTS		
- 31	NAS222-15	SCREW	2	
- 32	AN960-416	WASHER	2	
- 33	MS20365-428C	NUT	2	
		---*---		
- 34	0543016-1	FITTING-NOSE GEAR LOWER	1	
		ATTACHING PARTS		
- 35	AN3-5A	BOLT	2	
- 36	AN960-10	WASHER	2	
- 37	MS20365-1032C	NUT	2	
		---*---		
- 38	0713059-1	FITTING-NOSE GEAR SUPPORT LH	1	
	0713059-2	FITTING-NOSE GEAR SUPPORT RH	1	
- 39	0713008-1	BULKHEAD-RUDDER OUTBOARD LH	1	
	0713008-2	BULKHEAD-RUDDER OUTBOARD RH	1	
- 40	0513049-4	ANGLE	2	
- 41	0713053-3	ANGLE-LH	1	
	0713053-4	ANGLE-RH	1	
- 42	0422344	RING-MOORING	1	
		ATTACHING PARTS		
- 43	MS20365-524C	NUT	1	
		---*---		
- 44	0713506-1	BRACE-INSTRUMENT PANEL	1	
- 45	0713506-2	BRACE-INSTRUMENT PANEL	1	
- 46	0752017-1	BRACKET ASSEMBLY LH	1	E
	0752033-1	BRACKET ASSEMBLY-LH	1	F
	0752017-2	BRACKET ASSEMBLY RH	1	E
	0752033-2	BRACKET ASSEMBLY-RH	1	F
- 47	0713100-26	SKIN-DOOR POST BULKHEAD LOWER	1	
- 48	0713115-1	BRACKET-FORWARD	1	
- 49	0713116-1	BRACKET-AFT	1	
- 50	0713100-8	ANGLE	2	
- 51	MS20822-4D	ELBOW	2	C
	S-1135-1	ELBOW CESSNA STANDARD	1	D
	S-1130-1	NUT CESSNA STANDARD	1	D
- 52	0713135-1	DOOR ASSEMBLY-AIR VENT	1	F
	0713139-1	INLET ASSEMBLY-AIR VENT	1	F
	0713140-1	SEAL-AIR VENT INLET	1	F

A---182 SERIAL 51557 THRU 52358
B---182 SERIAL 52359 & ON
C---182 SERIAL 51557 THRU 52446 & 52448 THRU 52522
D---182 SERIAL 52447 & 52523 & ON
E---182 SERIAL 52359 THRU 53007
F---182 SERIAL 18253008 & ON
G---182 SERIAL 51557 THRU 53007

FIGURE AND INDEX NO.	PART NUMBER	DESCRIPTION 1 2 3 4 5 6 7	UNITS PER ASSY	USABLE ON CODE
23- 1	0791300-8	BULKHEAD ASSEMBLY-LANDING GEAR	NP	A
	0791302-4	BULKHEAD ASSEMBLY-LANDING GEAR	1	D
- 2	0511162-4	SPAR ASSEMBLY-FUSELAGE CENTER SECTION FORWARD	1	C
	1213127-1	SPAR ASSEMBLY-FUSELAGE CENTER SECTION FORWARD	1	D
- 3	0411129	BLOCK-FUSELAGE SPAR BEARING	2	
		ATTACHING PARTS		
- 4	AN3-20A	BOLT	4	
- 5	AN960-10L	WASHER	4	
- 6	MS20365-1032C	NUT	8	
- 7	AN3-21A	BOLT	4	
- 8	AN960-10	WASHER	4	
		---*---		
- 9	0412496	RETAINER-UPHOLSTERY	1	
- 10	NAS680A3	NUTPLATE	2	
- 11	NAS680A3	NUTPLATE EN	4	B
- 12	0791300-9	DOOR POST ASSEMBLY-FUSELAGE LH	1	
	0513006-44	BULKHEAD ASSEMBLY-DOORPOST FORWARD LH	1	
- 13	0513006-3	BULKHEAD-DOORPOST FORWARD LH	1	
- 14	0513006-40	BRACKET-DOORPOST UPPER FORWARD LH	1	
	0513006-46	BULKHEAD ASSEMBLY-DOORPOST AFT LH	1	
- 15	0513006-34	BULKHEAD-DOORPOST AFT LH	1	
- 16	0513006-38	BRACKET-DOORPOST LH	1	
- 17	NAS680A3	NUTPLATE	4	
- 18	0513006-8	PLATE-DOOR SPLICE LH	1	
- 19	0513006-101	SKIN-DOOR POST OUTER LH	1	
- 20	0513006-42	REINFORCEMENT-DOORPOST INBOARD LH	1	
- 21	0513006-25	RETAINER-HEADLINER LH	1	
- 22	0713496-3	BRACKET-STIFFENER LH	1	
- 23	0791300-10	DOORPOST ASSEMBLY-FUSELAGE RH	1	
	0513006-45	BULKHEAD ASSEMBLY-DOORPOST FORWARD RH	1	
- 24	0513006-21	BULKHEAD-DOORPOST FORWARD RH	1	
- 25	0513006-41	BRACKET-DOORPOST UPPER FORWARD RH	1	
	0513006-47	BULKHEAD ASSEMBLY-DOORPOST AFT RH	1	
- 26	0513006-35	BULKHEAD-DOORPOST AFT RH	1	
- 27	0513006-39	BRACKET-DOORPOST UPPER AFT RH	1	
- 28	NAS680A3	NUTPLATE	3	
- 29	0513006-22	PLATE-DOORPOST SPLICE RH	1	
- 30	0513006-102	SKIN-DOORPOST OUTER RH	1	
- 31	0513006-43	REINFORCEMENT-DOORPOST UPPER INBOARD RH	1	
- 32	0513006-26	RETAINER-HEADLINER RH	1	
- 33	0713496-4	BRACKET-STIFFENER RH	1	
- 34	NAS680A3	NUTPLATE	1	
- 35	0513006-11	FLOORBOARD-LANDING GEAR SUPPORT	1	
- 36	0713495-53	ANGLE-LANDING GEAR BULKHEAD SPLICE LH	1	
- 37	0713495-54	ANGLE-LANDING GEAR BULKHEAD SPLICE RH	1	
- 38	NAS178-8-7	RIVET-HI SHEAR	4	
- 39	NAS179-8	COLLAR	4	
- 40	0510163	BRACKET-FLAP RETURN FUSELAGE LOWER PULLEY	1	
		ATTACHING PARTS		
	AN520-10R7	SCREW	1	
	MS20365-1032C	NUT	1	
		---*---		
- 41	0513006-151	BULKHEAD ASSEMBLY-LANDING GEAR SUPPORT	1	
	0713495-63	BRACKET ASSEMBLY-LANDING GEAR SUPPORT OUTBOARD LH	1	
- 42	0713495-61	BRACKET-LANDING GEAR SUPPORT OUTBOARD LH	1	
- 43	0713495-57	ANGLE-LANDING GEAR SUPPORT OUTBOARD LH	1	
- 44	NAS682A4	NUTPLATE EN	2	
- 45	0713495-5	ANGLE-LANDING GEAR SUPPORT LOWER OUTBOARD	1	
- 46	0510112	BRACKET-ELEVATOR BELLCRANK LH	1	
- 47	0510112-1	BRACKET-ELEVATOR BELLCRANK RH	1	
	0713495-59	BRACKET ASSEMBLY-LANDING GEAR SUPPORT INBOARD LH	1	
- 48	0713495-7	BRACKET-LANDING GEAR SUPPORT INBOARD LH	1	

180 ALL SERIALS

CONTINUED ON PAGES 60 & 61

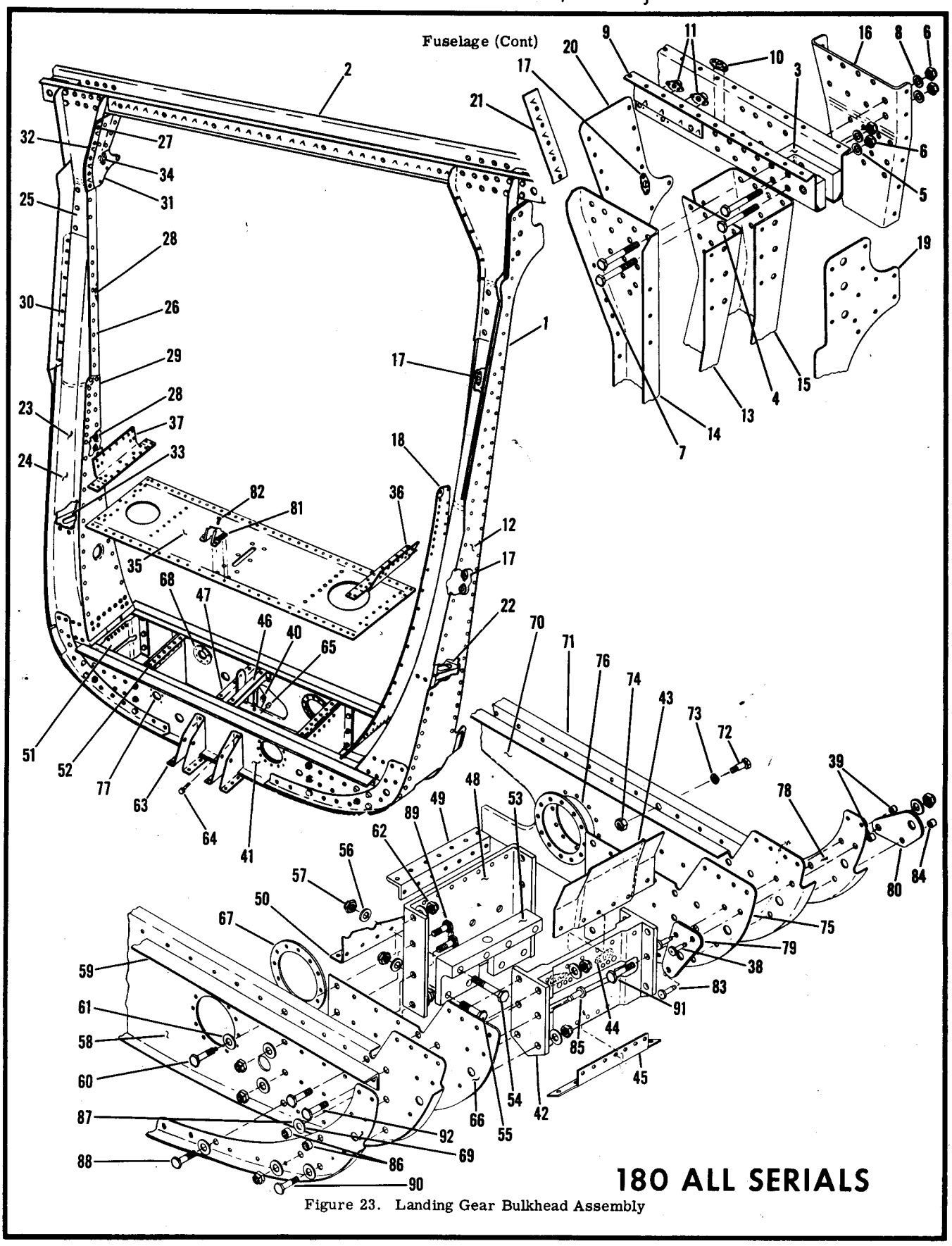

Figure 23. Landing Gear Bulkhead Assembly

FIGURE AND INDEX NO.	PART NUMBER	DESCRIPTION 1 2 3 4 5 6 7	UNITS PER ASSY	USABLE ON CODE
23- 49	0713495-18	ANGLE-LANDING GEAR SUPPORT UPPER INBOARD	1	
- 50	0742115-26	ANGLE-LANDING GEAR SUPPORT LOWER INBOARD	1	
- 51	0713495-64	BRACKET ASSEMBLY-LANDING GEAR SUPPORT OUTBOARD RH	1	
	0713495-62	BRACKET-LANDING GEAR SUPPORT	1	
	0713495-58	ANGLE-LANDING GEAR SUPPORT UPPER OUTBOARD RH	1	
	NAS682A4	NUTPLATE EN	2	
	0713495-5	ANGLE-LANDING GEAR SUPPORT LOWER OUTBOARD	1	
- 52	0713495-60	BRACKET ASSEMBLY-LANDING GEAR SUPPORT INBOARD RH	1	
	0713495-18	ANGLE-LANDING GEAR SUPPORT UPPER INBOARD	1	
	0713495-8	BRACKET-LANDING GEAR SUPPORT	1	
	0742115-25	ANGLE-LANDING GEAR SUPPORT LOWER INBOARD	1	
- 53	0713495-6	ANGLE-LANDING GEAR ATTACHMENT	2	
		ATTACHING PARTS		
- 54	AN5-15A	BOLT	8	
- 55	AN5-7A	BOLT	12	
- 56	AN960-516	WASHER	40	
- 57	MS20365-524C	NUT	20	
		---*---		
	0513006-104	BULKHEAD ASSEMBLY-LANDING GEAR SUPPORT FORWARD	1	
- 58	0513006-9	BULKHEAD-LANDING GEAR SUPPORT FORWARD	1	
- 59	0513006-23	ANGLE-FORWARD BULKHEAD REINFORCEMENT	1	
		ATTACHING PARTS		
- 60	AN3-5A	BOLT	4	
- 61	AN960-10	WASHER	4	
- 62	MS20365-1032C	NUT	4	
		---*---		
- 63	0510110	BRACKET-CONTROL PULLEY	2	
		ATTACHING PARTS		
- 64	AN3-4A	BOLT	2	
- 65	MS20365-1032C	NUT	2	
		---*---		
- 66	0713495-15	PLATE-FORWARD BULKHEAD REINFORCEMENT LH	1	
	0713495-16	PLATE-FORWARD BULKHEAD REINFORCEMENT RH	1	
- 67	0513006-61	DOUBLER	1	
- 68	0513006-62	DOUBLER	1	
- 69	0713495-11	STIFFENER-BULKHEAD FORWARD LH	1	
	0713495-12	STIFFENER-BULKHEAD FORWARD RH	1	
	0513006-105	BULKHEAD ASSEMBLY-LANDING GEAR SUPPORT AFT	1	
- 70	0513006-103	BULKHEAD-LANDING GEAR SUPPORT AFT	1	
- 71	0513006-24	ANGLE-AFT BULKHEAD REINFORCEMENT	1	
		ATTACHING PARTS		
- 72	AN3-5A	BOLT	2	
- 73	AN960-10	WASHER	2	
- 74	MS20365-1032C	NUT	2	
		---*---		
- 75	0713495-13	PLATE-AFT BULKHEAD REINFORCEMENT LH	1	
	0713495-14	PLATE-AFT BULKHEAD REINFORCEMENT RH	1	
- 76	0513006-61	DOUBLER	1	
- 77	0513006-62	DOUBLER	1	
- 78	0713495-9	STIFFENER-BULKHEAD AFT LH	1	
	0713495-10	STIFFENER-BULKHEAD AFT RH	1	
- 79	0713495-55	SPACER-WING STRUT FITTING FORWARD	4	
- 80	0713495-17	PLATE-WING STRUT FITTING	2	
- 81	0713497-3	BRACKET ASSEMBLY-FORWARD ELEVATOR STOP	1	
- 82	NAS428H3-6	BOLT	1	
- 83	NAS178-8-7	RIVET-HI SHEAR	2	
- 84	NAS179-8	COLLAR	2	
- 85	NAS178-10-6	RIVET-HI SHEAR	4	
- 86	NAS179-10	COLLAR	4	
- 87	AN960-516L	WASHER	26	
- 88	AN5-6A	BOLT	4	
	AN960-516L	WASHER	4	
	MS20365-524C	NUT	24	
- 89	AN6-6A	BOLT	12	
	AN960-616L	WASHER	12	
	MS20365-624C	NUT	12	
- 90	AN5-7A	BOLT	20	
- 91	AN6-10A	BOLT	2	
- 92	AN6-7A	BOLT	8	

A---180 SERIAL 30000 & ON
B---180 SERIAL 31533 & ON
C---180 SERIAL 30000 THRU 50661
D---180 SERIAL 50662 & ON

Fuselage (Cont)

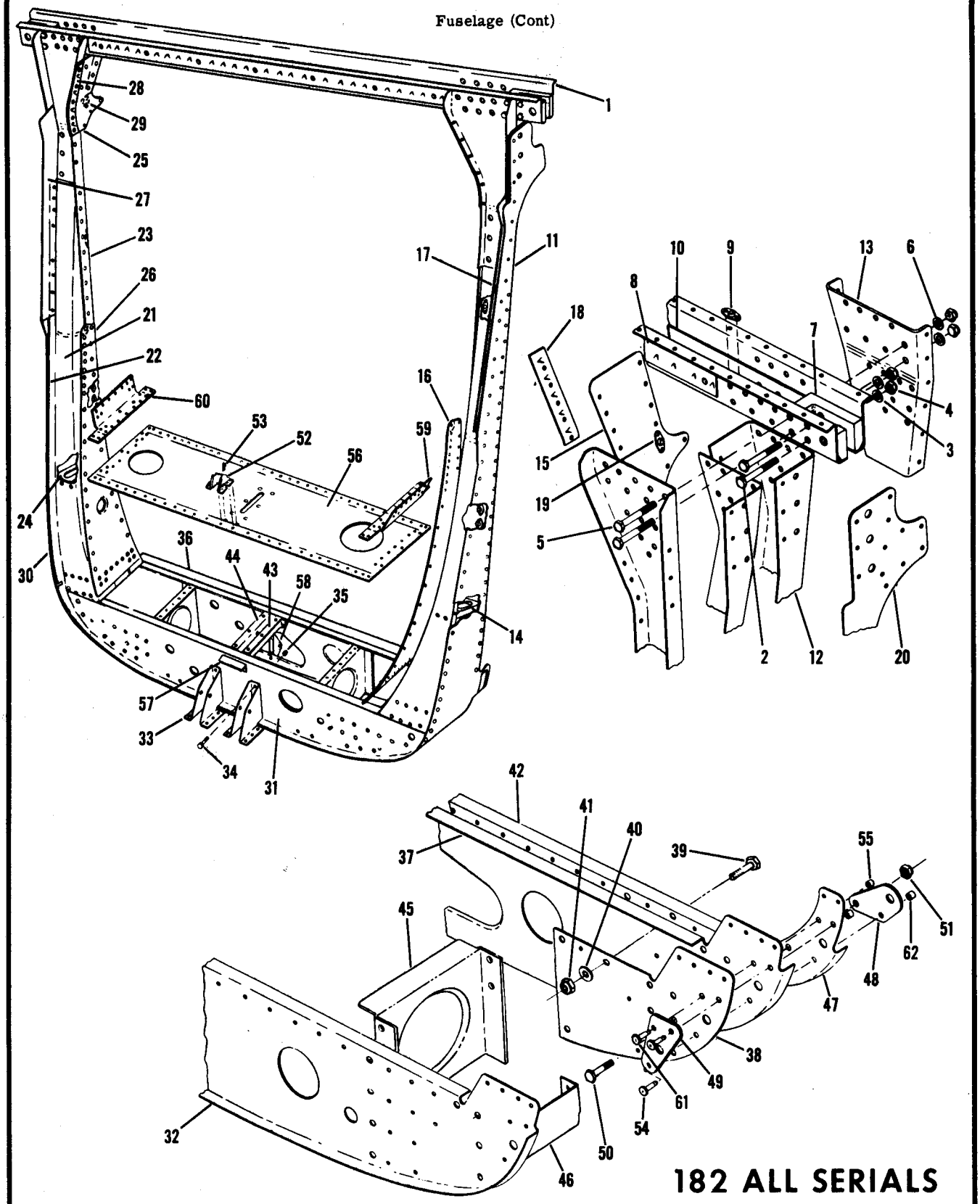

Figure 24. Front Doorpost Bulkhead Assembly

FIGURE AND INDEX NO.	PART NUMBER	DESCRIPTION 1 2 3 4 5 6 7	UNITS PER ASSY	USABLE ON CODE
24-	0513007-11	BULKHEAD ASSEMBLY-FRONT DOORPOST	1	A
	0513007-20	BULKHEAD ASSEMBLY-FRONT DOORPOST	1	B
	0513007-24	BULKHEAD ASSEMBLY-FRONT DOORPOST	1	C
- 1	0511162-4	SPAR ASSEMBLY-FUSELAGE CENTER SECTION FORWARD	1	D
	1213127-1	SPAR ASSEMBLY-FUSELAGE CENTER SECTION FORWARD	1	C
		ATTACHING PARTS		
- 2	AN3-20A	BOLT	4	
- 3	AN960-10L	WASHER	4	
- 4	MS20365-1032C	NUT	4	
- 5	AN3-21A	BOLT	1	
- 6	AN960-10	WASHER	1	
		---*---		
- 7	0411129	BLOCK-FUSELAGE SPAR BEARING	2	
- 8	0412496	RETAINER-UPHOLSTERY	1	
- 9	NAS680A3	NUTPLATE	4	
- 10	0511162-3	REINFORCEMENT-SPAR	1	
- 11	0513007-15	DOORPOST ASSEMBLY-FUSELAGE LH	1	A
	0513007-19	DOORPOST ASSEMBLY-FUSELAGE LH	1	E
- 12	0513006-44	BULKHEAD ASSEMBLY-DOORPOST FORWARD LH	1	
- 13	0513006-46	BULKHEAD ASSEMBLY-DOORPOST AFT LH	1	
- 14	0713496-3	BRACKET-STIFFENER LH	1	
- 15	0513006-42	REINFORCEMENT-DOORPOST INBOARD LH	1	
- 16	0513006-8	PLATE-DOORPOST SPLICE LH	1	
- 17	0513006-112	RETAINER-WINDSHIELD LH	1	A
	0713106-1	RETAINER-WINDSHIELD LH	1	E
- 18	0513006-25	RETAINER-HEADLINER LH	1	
- 19	NAS680A3	NUTPLATE	1	
- 20	0513007-13	SKIN-DOORPOST OUTER LH	1	
- 21	0513007-16	DOORPOST ASSEMBLY-FUSELAGE RH	1	A
	0513007-18	DOORPOST ASSEMBLY-FUSELAGE RH	1	E
- 22	0513006-45	BULKHEAD ASSEMBLY-DOORPOST FORWARD RH	1	
- 23	0513006-47	BULKHEAD ASSEMBLY-DOORPOST AFT RH	1	
- 24	0713496-4	BRACKET-STIFFENER RH	1	
- 25	0513006-43	REINFORCEMENT-DOORPOST UPPER INBOARD RH	1	
- 26	0513006-22	PLATE-DOORPOST SPLICE RH	1	
- 27	0513006-113	RETAINER-WINDSHIELD RH	1	A
	0713106-2	RETAINER-WINDSHIELD RH	1	E
- 28	0513006-26	RETAINER-HEADLINER RH	1	
- 29	NAS680A3	NUTPLATE	1	
- 30	0513007-14	SKIN-DOORPOST OUTER RH	1	
	0513007-12	BULKHEAD ASSEMBLY-LOWER	1	
- 31	0513007-9	BULKHEAD ASSEMBLY-FORWARD	1	
- 32	0513006-9	BULKHEAD-FORWARD	1	
- 33	0510110	BRACKET-CONTROL PULLEY	2	
		ATTACHING PARTS		
- 34	AN3-4A	BOLT	2	
- 35	MS20365-1032C	NUT	2	
		---*---		
- 36	0513007-10	BULKHEAD ASSEMBLY-AFT	1	
- 37	0513006-103	BULKHEAD-AFT	1	
- 38	0713495-13	PLATE-AFT BULKHEAD REINFORCEMENT LH	1	
	0713495-14	PLATE-AFT BULKHEAD REINFORCEMENT RH	1	
		ATTACHING PARTS		
- 39	AN3-5A	BOLT	2	
- 40	AN960-10	WASHER	2	
- 41	MS20365-1032C	NUT	2	
		---*---		
- 42	0513006-24	ANGLE-AFT BULKHEAD REINFORCEMENT	1	
- 43	0510112	BRACKET-ELEVATOR BELLCRANK LH	1	
- 44	0510112-1	BRACKET-ELEVATOR BELLCRANK RH	1	
- 45	0713054-1	BULKHEAD-INBOARD LH	1	
	0713054-2	BULKHEAD-INBOARD RH	1	
- 46	0713054-3	BULKHEAD-OUTBOARD LH	1	
	0713054-4	BULKHEAD-OUTBOARD RH	1	
- 47	0713495-9	STIFFENER-BULKHEAD AFT LH	1	
	0713495-10	STIFFENER-BULKHEAD AFT RH	1	
- 48	0713495-17	PLATE	2	
		ATTACHING PARTS		
- 49	0713495-55	SPACER	4	
- 50	AN6-6A	BOLT	2	
- 51	MS20365-624C	NUT	2	
		---*---		

182 ALL SERIALS

CONTINUED ON PAGE 64

FIGURE AND INDEX NO.	PART NUMBER	DESCRIPTION 1 2 3 4 5 6 7	UNITS PER ASSY	USABLE ON CODE
24- 52	0713497-3	BRACKET ASSEMBLY-FORWARD ELEVATOR STOP----------	1	
		ATTACHING PARTS		
- 53	NAS428H3-10	BOLT----------	1	
		---*---		
	NAS680A3	NUT EN ----------	1	
- 54	NAS178-8-7	RIVET-HI SHEAR----------	2	
- 55	NAS179-8	COLLAR ----------	2	
- 56	0513007-7	SHEET-FLOORBOARD ----------	1	
- 57	0513007-17	ANGLE-REINFORCING ----------	1	
- 58	0510163	BRACKET ----------	1	
		ATTACHING PARTS		
	AN520-10R7	SCREW ----------	1	
	MS20365-1032C	NUT ----------	1	
		---*---		
- 59	0713495-53	STIFFENER-LH ----------	1	
- 60	0713495-54	STIFFENER-RH ----------	1	
- 61	NAS178-8-7	RIVET-HI SHEAR ----------	4	
- 62	NAS179-8	COLLAR----------	4	

A---182 SERIAL 33000 THRU 51556
B---182 SERIAL 51557 THRU 52358
C---182 SERIAL 52359 & ON
D---182 SERIAL 33000 THRU 52358
E---182 SERIAL 51557 & ON

This page intentionally left blank.

Fuselage (Cont)

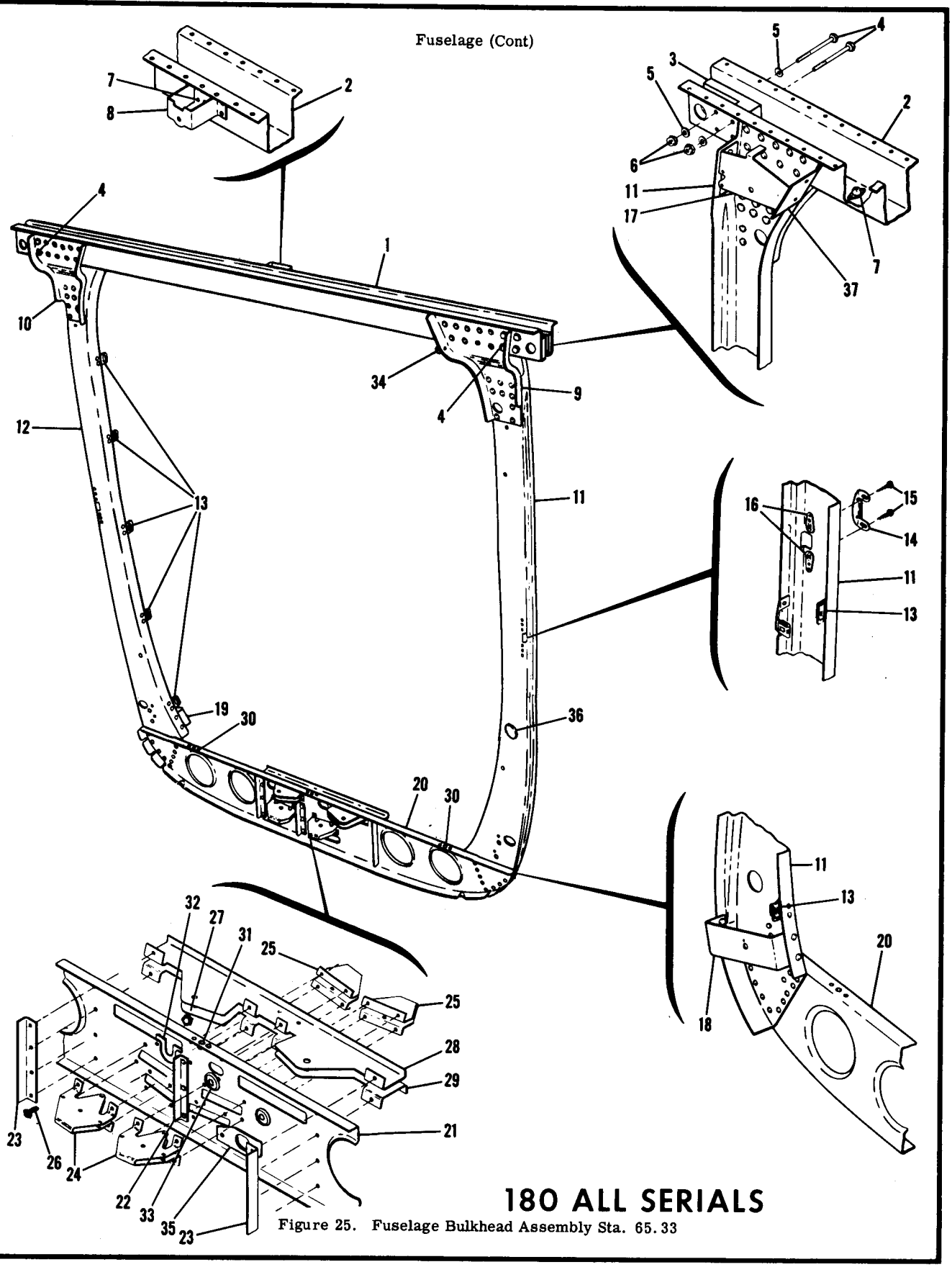

180 ALL SERIALS

Figure 25. Fuselage Bulkhead Assembly Sta. 65.33

FIGURE AND INDEX NO.	PART NUMBER	DESCRIPTION 1 2 3 4 5 6 7	UNITS PER ASSY	USABLE ON CODE
25-	0791100-5	BULKHEAD ASSEMBLY-FUSELAGE STA 65.33	1	A
	0791100-13	BULKHEAD ASSEMBLY-FUSELAGE STA 65.33	1	E
	0791102-4	BULKHEAD ASSEMBLY-FUSELAGE STA 65.33	1	D
- 1	0512124-51	SPAR ASSEMBLY-FUSELAGE REAR	1	F
	0791102-5	SPAR ASSEMBLY-FUSELAGE REAR	1	D
- 2	0512124-6	SPAR-FUSELAGE REAR — 180 ALL	1	F
	1210029-2	SPAR-FUSELAGE REAR — SERIALS	1	D
- 3	0512122	BLOCK	2	
		ATTACHING PARTS		
- 4	AN3-20A	BOLT	8	
- 5	AN960-10	WASHER	12	
- 6	MS20365-1032C	NUT	8	
		---*---		
- 7	NAS680A3	NUTPLATE	2	
- 8	0512137	BRACKET-PULLEY	1	
- 9	0512124-8	BRACE-BULKHEAD TO REAR SPAR LH	1	
- 10	0512124-9	BRACE-BULKHEAD TO REAR SPAR RH	1	
	0791100-8	CHANNEL ASSEMBLY-LH	1	A
	0791100-11	CHANNEL ASSEMBLY-LH	1	B
	0512124-12	CHANNEL ASSEMBLY-RH	1	A
	0791100-12	CHANNEL ASSEMBLY-RH	1	B
- 11	0512124-22	CHANNEL-LH	1	A
	0512124-30	CHANNEL-LH	1	G
	0512124-40	CHANNEL-LH	1	H
- 12	0512124-20	CHANNEL-RH	1	A
	0512124-29	CHANNEL-RH	1	G
	0512124-39	CHANNEL-RH	1	H
- 13	0512150	CLIP-UPHOLSTERY FAIRING ATTACHING	5	
	NAS395-16-3	NUT	5	
- 14	0411582	STRIKE PLATE-DOOR LATCH	1	A
	0711024-4	STRIKE PLATE-DOOR LATCH	1	B
		ATTACHING PARTS		
- 15	AN515-8R8	SCREW	2	A
	AN520-10R8	SCREW	2	B
- 16	NAS682A08	NUT EN	2	A
	NAS687A3	NUT EN	2	B
- 17	0512139	BRACKET-AILERON UPPER PULLEY LH	1	J
	0512139-2	BRACKET-AILERON UPPER PULLEY LH	1	H
	0512139-1	BRACKET-AILERON UPPER PULLEY RH	1	J
	0512139-3	BRACKET-AILERON UPPER PULLEY RH	1	H
- 18	0512134	BRACKET-PULLEY LH	1	
- 19	0512134-1	BRACKET-PULLEY RH	1	
- 20	0512124-13	BULKHEAD ASSEMBLY-LOWER	1	
- 21	0512133	BULKHEAD-LOWER	1	
- 22	0512124-5	ANGLE-BULKHEAD CENTER REINFORCEMENT	1	
- 23	0512124-7	ANGLE-BULKHEAD REINFORCEMENT	2	
- 24	0512128	BRACKET-FLAP PULLEY	2	
- 25	0512129	BRACKET-FLAP RETURN PULLEY	2	
		ATTACHING PARTS		
- 26	AN520-10R7	SCREW	8	
- 27	MS20365-1032C	NUT	8	
		---*---		
- 28	0512132	BRACKET ASSEMBLY-AILERON PULLEY UPPER	1	
	0512134-4	FAIRLEAD	1	
- 29	0512132-1	BRACKET ASSEMBLY-AILERON PULLEY LOWER	1	
	0512132-4	FAIRLEAD	1	
	0512132-5	FAIRLEAD	1	
- 30	NAS680A4	NUTPLATE	2	
- 31	NAS680A3	NUTPLATE	1	
- 32	0512152	FAIRLEAD	1	
- 33	S-338-6	FAIRLEAD CESSNA STANDARD	2	
- 34	A2980A-2-27	CLAMP TIN	1	
		ATTACHING PARTS		
	S-1021Z-4-6	SCREW CESSNA STANDARD	1	
		---*---		
- 35	0512124-15	FAIRLEAD	1	
- 36	51149	PLUG BUTTON-----UC	1	C
- 37	0512124-32	RUB STRIP-AILERON CABLE	2	

A---180 SERIAL 30000 THRU 32661
B---180 SERIAL 32662 & ON
C---USE ON AIRPLANES WITHOUT BAGGAGE DOOR ONLY
D---180 SERIAL 50662 & ON
E---180 SERIAL 32662 THRU 50661
F---180 SERIAL 30000 THRU 50661
G---180 SERIAL 32662 THRU 50820
H---180 SERIAL 50821 & ON
J---180 SERIAL 30000 THRU 50820

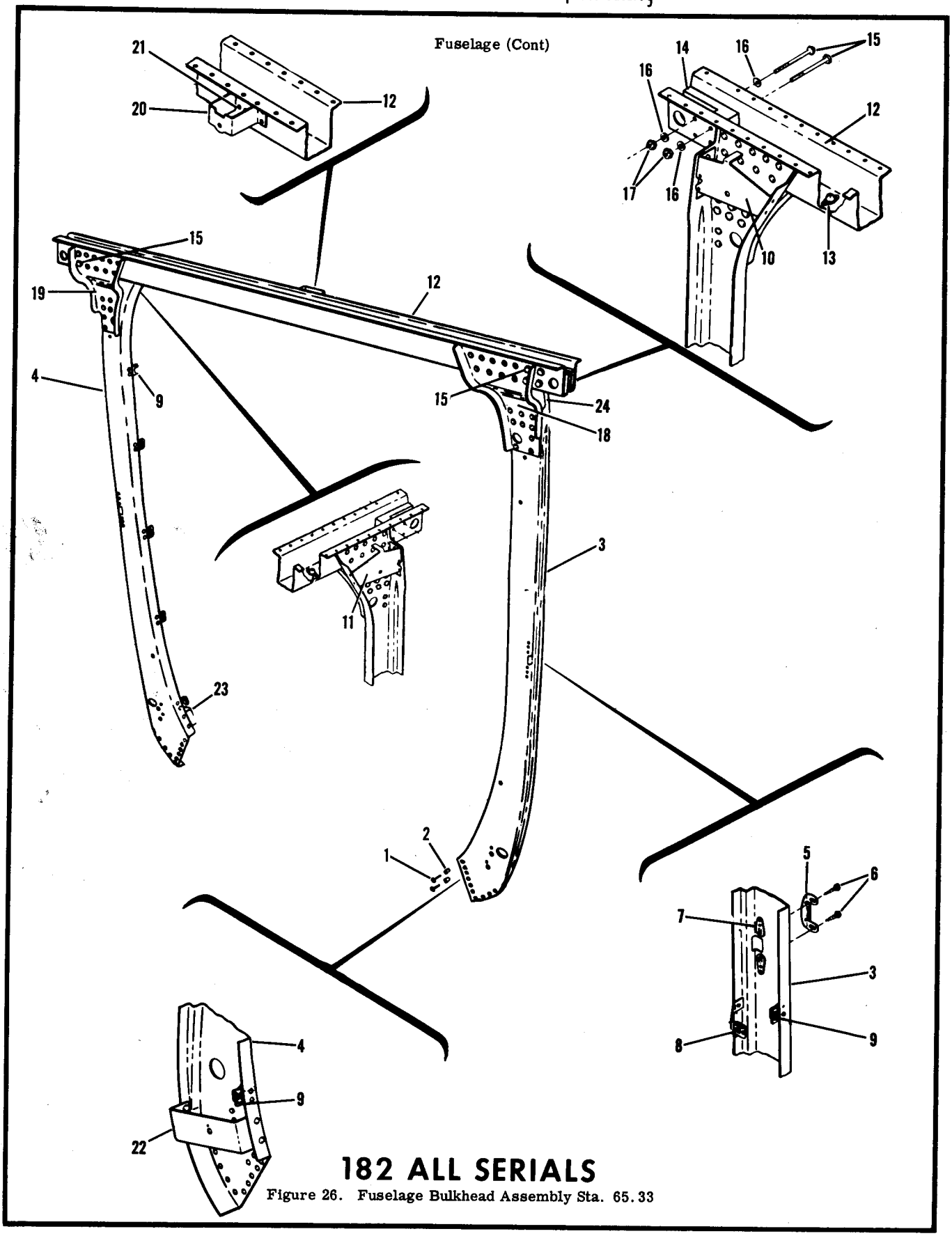

182 ALL SERIALS

Figure 26. Fuselage Bulkhead Assembly Sta. 65.33

FIGURE AND INDEX NO.	PART NUMBER	DESCRIPTION 1 2 3 4 5 6 7	UNITS PER ASSY	USABLE ON CODE
26-		FUSELAGE BULKHEAD INSTALLATION STA 65.33	NP	G
- 1	NAS178-8-5	RIVET-HI SHEAR	4	
- 2	NAS179-8	COLLAR	4	
	0512124-23	BULKHEAD ASSEMBLY-FUSELAGE	1	A
	0512124-28	BULKHEAD ASSEMBLY-FUSELAGE — 182 ALL	1	D
	0512124-34	BULKHEAD ASSEMBLY-FUSELAGE — SERIALS	1	E
- 3	0512124-25	CHANNEL-LH	1	A
	0512124-27	CHANNEL-LH	1	H
	0512124-37	CHANNEL-LH	1	J
- 4	0512124-24	CHANNEL-RH	1	A
	0512124-26	CHANNEL-RH	1	H
	0512124-38	CHANNEL-RH	1	J
- 5	0411582	STRIKE PLATE	2	A
	0711024-1	STRIKE PLATE	2	B
		ATTACHING PARTS		
- 6	AN515-8R8	SCREW	2	A
- 7	NAS682A08	NUT EN	2	A
	AN520-10R8	SCREW	2	B
	NAS687A3	NUTPLATE EN	2	B
	0711024-2	SHIM	AR	B
		---*---		
- 8	0511185	CLIP	2	
		ATTACHING PARTS		
	NAS395-16-3	NUT TIN A1784-6Z-3	2	
		---*---		
- 9	0512150	CLIP-UPHOLSTERY	10	
		ATTACHING PARTS		
	NAS395-16-3	NUT TIN A1784-6Z-3	10	
		---*---		
- 10	0512139	BRACKET-AILERON UPPER PULLEY LH	1	K
	0512139-2	BRACKET-AILERON UPPER PULLEY LH	1	J
- 11	0512139-1	BRACKET-AILERON UPPER PULLEY RH	1	K
	0512139-3	BRACKET-AILERON UPPER PULLEY RH	1	J
- 12	0512124-6	SPAR-CENTER SECTION	1	F
	1210029-2	SPAR-CENTER SECTION	1	E
- 13	NAS680A3	NUTPLATE	2	
- 14	0512122	BLOCK-BEARING	2	
		ATTACHING PARTS		
- 15	AN3-20A	BOLT	4	
- 16	AN960-10	WASHER	6	
- 17	MS20365-1032C	NUT	4	
		---*---		
- 18	0512124-8	BRACE-BULKHEAD TO REAR SPAR LH	1	
- 19	0512124-9	BRACE-BULKHEAD TO REAR SPAR RH	1	
- 20	0512137	BRACKET-PULLEY	1	
- 21	NAS680A3	NUTPLATE	1	
- 22	0512134	BRACKET-PULLEY LH	1	
- 23	0512134-1	BRACKET-PULLEY RH	1	
- 24	0512124-32	RUB STRIP-AILERON CABLE	2	C

A---182 SERIAL 33000 THRU 33842
B---182 SERIAL 33843 & ON
C---182 SERIAL 51163 & ON
D---182 SERIAL 33843 THRU 52358
E---182 SERIAL 52359 & ON
F---182 SERIAL 33000 THRU 52358
G---182 SERIAL 33000 & ON
H---182 SERIAL 33843 THRU 52566
J---182 SERIAL 52567 & ON
K---182 SERIAL 33000 THRU 52566

This page intentionally left blank.

Fuselage (Cont)

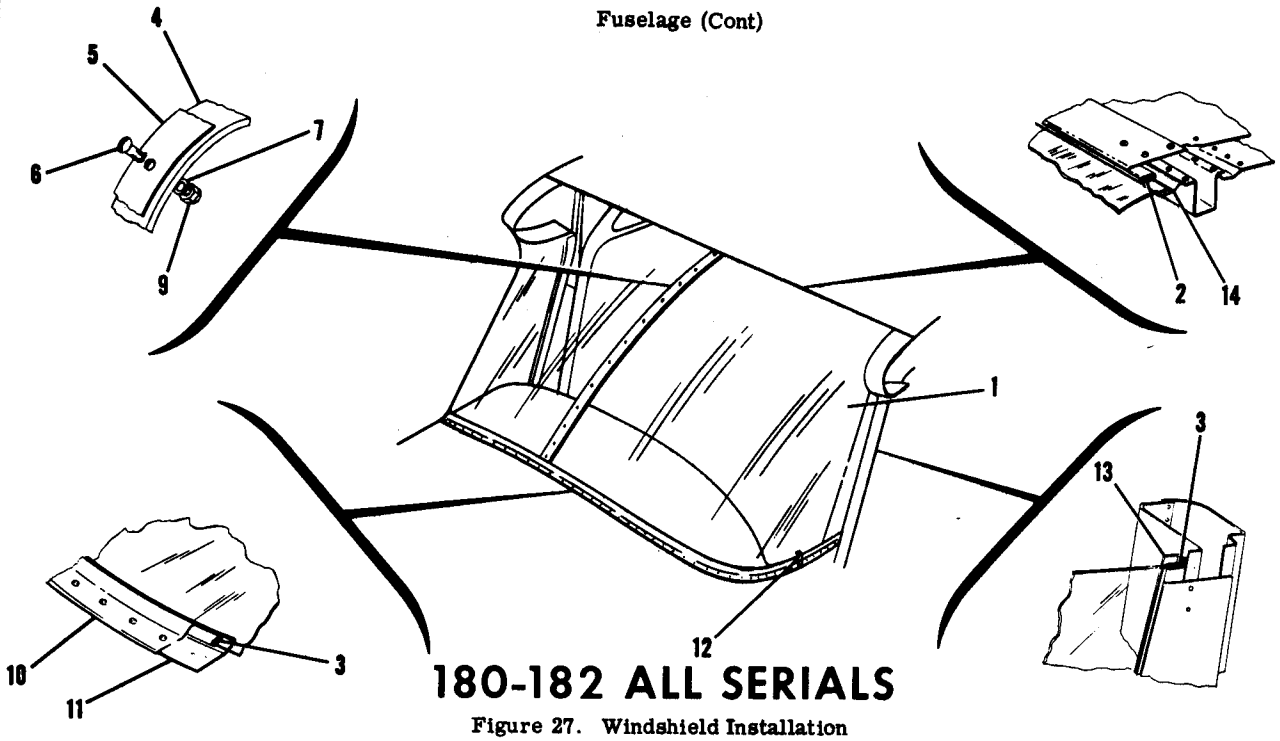

180-182 ALL SERIALS

Figure 27. Windshield Installation

FIGURE AND INDEX NO.	PART NUMBER	DESCRIPTION 1 2 3 4 5 6 7	UNITS PER ASSY	USABLE ON CODE
27-		WINDSHIELD INSTALLATION	NP	
- 1	0791300-4	WINDSHIELD ASSEMBLY	1	A
	0791300-7	WINDSHIELD ASSEMBLY	1	B
	0791300-13	WINDSHIELD ASSEMBLY TINTED	1	B
	0791300-15	WINDSHIELD ASSEMBLY	1	C
	0791300-16	WINDSHIELD ASSEMBLY TINTED	1	C
- 2	S-1389-6	PAD-WINDSHIELD UPPER	1	D
- 3	S-1389-2	PAD-WINDSHIELD	2	F
	S-1078-3	SEALER-TAPE LOWER 78 INCHES LONG BULK ITEM CESSNA STANDARD	AR	F
- 4	0713000-20	STRIP-WINDSHIELD CENTER INNER	1	E
	0713100-15	STRIP-WINDSHIELD CENTER INNER	1	C
- 5	0713000-22	STRIP-WINDSHIELD CENTER OUTER	1	E
	0713118-1	STRIP-WINDSHIELD CENTER OUTER	1	C
		ATTACHING PARTS		
- 6	AN520-10R10	SCREW	4	A
	AN520-10R12	SCREW	4	F
- 7	S-350	WASHER-----CESSNA STANDARD	12	
- 8		DELETED, NOT PROCURABLE		
- 9	22NKM-02	NUT EN	4	
		---*---		
- 10	0713000-2	STRIP-WINDSHIELD RETAINING OUTER	1	E
	0713100-13	STRIP-WINDSHIELD RETAINING OUTER	1	C
- 11	0713000-3	STRIP-WINDSHIELD RETAINING INNER	1	E
- 12	0713057-1	CLIP-FAIRING RETAINER	2	E
	0713107-1	CLIP-FAIRING RETAINER	1	C
- 13	0513006-16	STRIP-WINSHIELD-INSIDE RETAINING LH	1	A
	0513006-112	STRIP-WINDSHIELD-INSIDE RETAINING LH	1	B
	0713106-1	STRIP-WINDSHIELD-INSIDE RETAINING LH	1	C
	0513006-17	STRIP-WINDSHIELD-INSIDE RETAINING RH	1	A
	0513006-113	STRIP-WINDSHIELD-INSIDE RETAINING RH	1	B
	0713106-2	STRIP-WINDSHIELD-INSIDE RETAINING RH	1	C

CONTINUED ON PAGE 72

FIGURE AND INDEX NO.	PART NUMBER	DESCRIPTION 1 2 3 4 5 6 7	UNITS PER ASSY	USABLE ON CODE
27- 14	0511000-25	STRIP-WINDSHIELD INSIDE RETAINING UPPER ----------	1	A
	0511000-63	STRIP-WINDSHIELD INSIDE RETAINING UPPER ----------	1	F
		A---180 SERIAL 30000 THRU 31260 B---180 SERIAL 31261 THRU 50355 182 SERIAL 33000 THRU 51556 C---180 SERIAL 50356 & ON 182 SERIAL 51557 & ON D---180 SERIAL 30000 & ON 182 SERIAL 33000 & ON E---180 SERIAL 30000 THRU 50355 182 SERIAL 33000 THRU 51556 F---180 SERIAL 31261 & ON 182 SERIAL 33000 & ON		

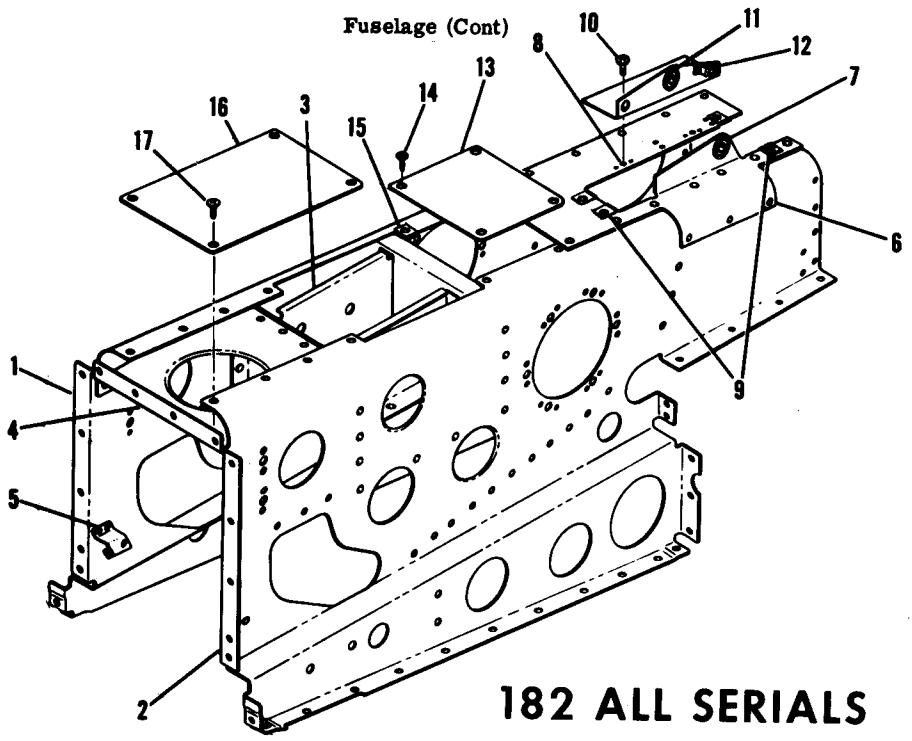

Figure 28. Fuselage Tunnel Assembly

FIGURE AND INDEX NO.	PART NUMBER	DESCRIPTION 1 2 3 4 5 6 7	UNITS PER ASSY	USABLE ON CODE
28-	0791301-4	TUNNEL ASSEMBLY-FUSELAGE FORWARD	1	A
	0791301-8	TUNNEL ASSEMBLY-FUSELAGE FORWARD	1	B
- 1	0510113-11	BULKHEAD-TUNNEL FORWARD RH	1	C
- 2	0510113-12	BULKHEAD ASSEMBLY-TUNNEL FORWARD LH	1	A
	0510113-9	BULKHEAD ASSEMBLY-TUNNEL FORWARD LH	1	B
	NAS444-2	NUT TIN A6195-6Z-3	1	
- 3	0510135	SUPPORT ASSEMBLY-CONTROL TEE	1	A
	0510135-3	SUPPORT ASSEMBLY-CONTROL TEE	1	B
- 4	0713052	BULKHEAD-TUNNEL REINFORCEMENT	1	
- 5	0510128	BRACKET-RUDDER PEDAL SPRING	2	A
- 6	0791301-6	COVER ASSEMBLY-FUSELAGE TUNNEL AFT	1	
	0713015-6	PLATE ASSEMBLY-COVER	1	
- 7	M-451	BEARING-----TOR	1	
- 8	NAS444-1	NUT TIN A6191-6Z-3	2	
- 9	NAS395-6-3	NUT TIN A1784-6Z-3	4	
	0713023-7	BRACKET ASSEMBLY	1	
		ATTACHING PARTS		
- 10	S-1021Z-6-8	SCREW CESSNA STANDARD ---*---	2	
- 11	M-451	BEARING-----TOR	1	
- 12	0713023-3	STOP ASSEMBLY	1	
- 13	0510141	COVER-FUSELAGE TUNNEL CENTER	1	A
		ATTACHING PARTS		
- 14	S-1021Z-8-6	SCREW CESSNA STANDARD	4	
- 15	NAS395-12-3	NUT TIN A1786-8Z-3	4	
		---*---		
- 16	0510144	COVER-FUSELAGE TUNNEL FORWARD	1	
		ATTACHING PARTS		
- 17	S-1021Z-8-6	SCREW CESSNA STANDARD	4	
		---*---		
		A---182 SERIAL 33000 THRU 34753		
		B---182 SERIAL 34754 & ON		
		C---182 SERIAL 33000 & ON		

Fuselage (Cont)

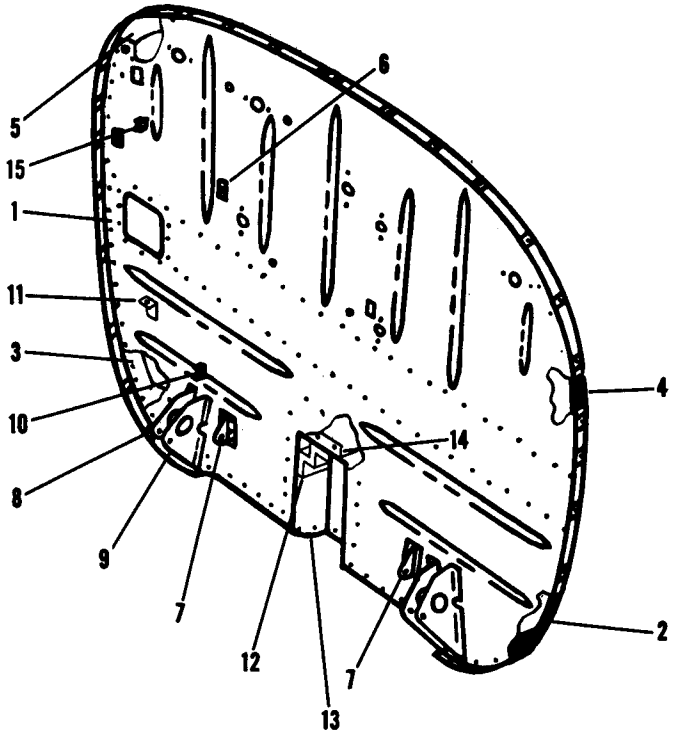

180 SERIAL 30000 THRU 50661

Figure 29. Firewall Assembly

FIGURE AND INDEX NO.	PART NUMBER	DESCRIPTION 1 2 3 4 5 6 7	UNITS PER ASSY	USABLE ON CODE
29-	0791300-2	FIREWALL ASSEMBLY	1	A
- 1	0753000-1	SHEET-FIREWALL	1	
- 2	0753000-23	ANGLE-LOWER DOUBLER LH	1	
- 3	0753000-24	ANGLE-LOWER DOUBLER RH	1	
- 4	0753000-15	ANGLE-UPPER DOULBER LH	1	
- 5	0753000-14	ANGLE-UPPER DOUBLER RH	1	
- 6	0753000-13	DOUBLER	4	
- 7	0753000-18	BRACKET-COWL FLAPS BELLCRANK	2	
- 8	0753000-7	BRACKET-COWL FLAPS BELLCRANK	2	
- 9	0450286-1	CLAMP-COWL FLAPS CONTROL	2	
- 10	0413151	BRACKET-SPRING ATTACHMENT	1	
- 11	0753000-3	BRACKET-FUEL STRAINER	1	
- 12	0753000-11	TUNNEL-FUEL STRAINER	1	
- 13	0753000-12	COVER	1	
- 14	0450286	CLAMP-HEATER VALVE CONTROL	1	
- 15	0753000-19	ANGLE-TAILPIPE SUPPORT LH	2	B
	0753000-20	ANGLE-TAILPIPE SUPPORT RH	2	B

A---180 SERIAL 30000 THRU 50661
B---180 SERIAL 30000 THRU 32150

Fuselage (Cont)

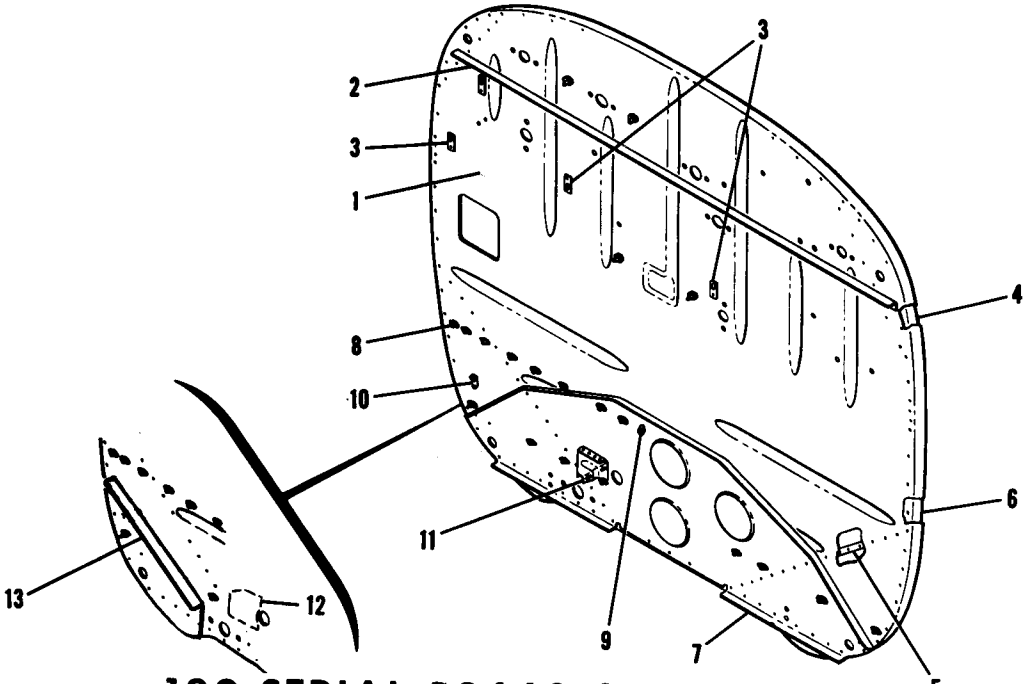

180 SERIAL 50662 & ON
182 ALL SERIALS

Figure 30. Firewall Assembly

FIGURE AND INDEX NO.	PART NUMBER	DESCRIPTION 1 2 3 4 5 6 7	UNITS PER ASSY	USABLE ON CODE
30-	0791301-2	FIREWALL ASSEMBLY	1	A
	0791302-2	FIREWALL ASSEMBLY	1	B
- 1	0753002-2	SHEET FIREWALL	1	C
	0753002-8	SHEET-FIREWALL	1	D
- 2	0753002-3	ANGLE-REINFORCEMENT	1	A
- 3	0753000-13	DOUBLER	4	
- 4	0753000-15	DOUBLER-LH	4	
	0753000-14	DOUBLER-RH	1	
- 5	0713053-1	ANGLE-LH	1	A
	0713053-2	ANGLE-RH	1	A
- 6	0753000-23	DOUBLER-LH	1	
	0753000-24	DOUBLER-RH	1	
- 7	0753001	REINFORCEMENT	1	A
- 8	NAS444-4	NUT TIN A6191-8Z-3	16	
- 9	NAS444-4	NUT TIN 8580-8Z-3	2	
- 10	0413151	BRACKET-SPRING ATTACHMENT	1	
- 11	0450111	BRACKET-FUEL STRAINER	1	
- 12	0753008-1	DOUBLER	1	B
- 13	0753017-3	REINFORCEMENT FLOATPLANE ONLY	1	

A---182 SERIAL 33000 & ON
B---180 SERIAL 50662 & ON
C---180 SERIAL 50662 THRU 50911
182 SERIAL 33000 THRU 53007
D---180 SERIAL 18050912 & ON
182 SERIAL 18253008 & ON

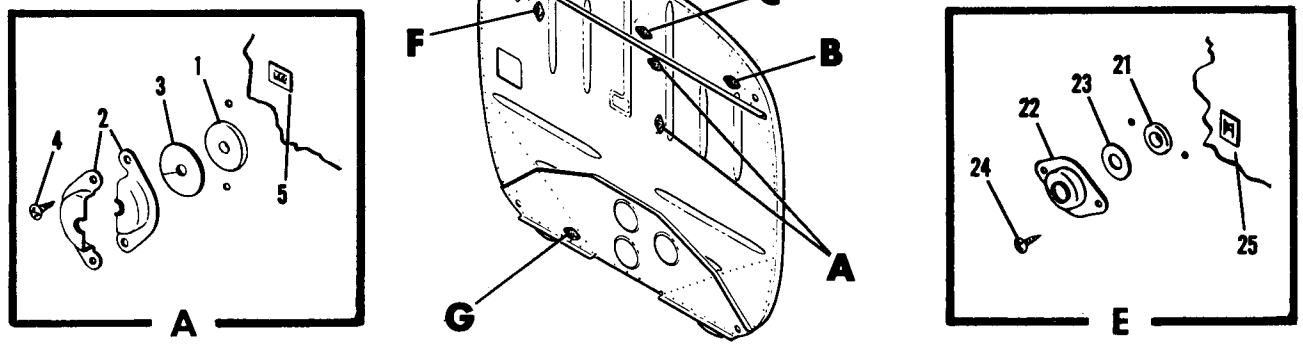

MODEL 182 ALL SERIALS
MODEL 180 SERIAL 50662 & ON

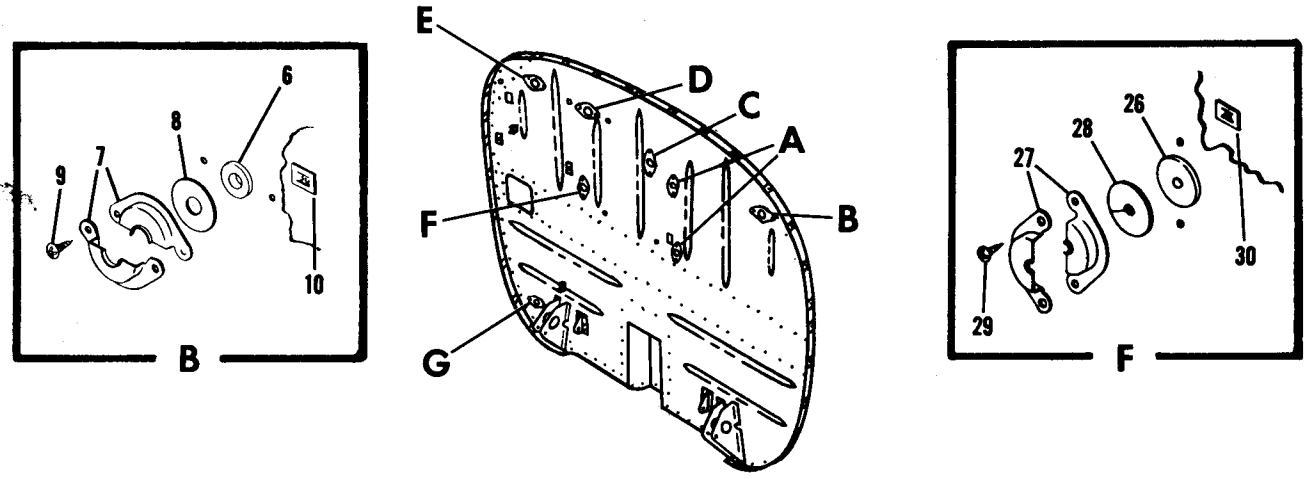

MODEL 180 SERIAL 30000 THRU 50661

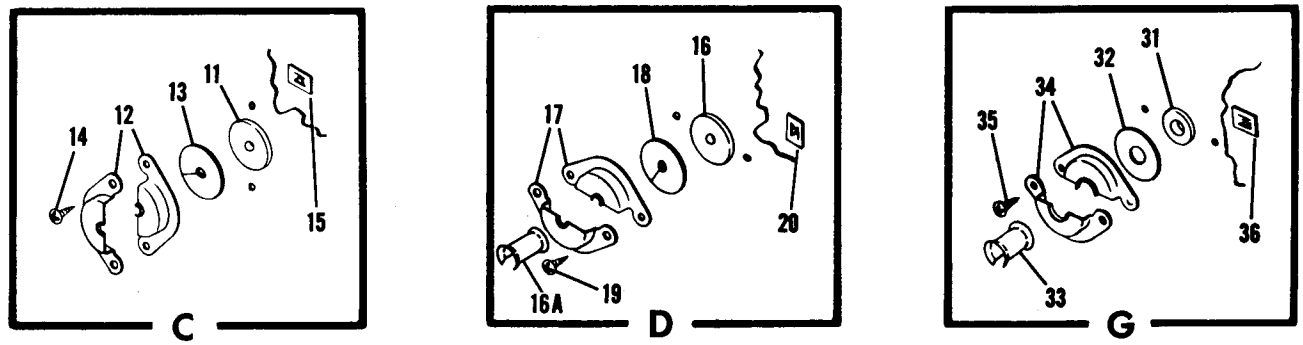

180 SERIAL 30000 THRU 18050951
182 SERIAL 33000 THRU 18253173

Figure 31. Firewall Grommets Installation

FIGURE AND INDEX NO.	PART NUMBER	DESCRIPTION 1 2 3 4 5 6 7	UNITS PER ASSY	USABLE ON CODE
31-		GROMMETS INSTALLATION-FIREWALL ----------	NP	B
- 1	MS35489-11	GROMMET PROPELLER CONTROL & THROTTLE CONTROL ---------	2	
- 2	S-352	SHIELD-FIREWALL HOLE CESSNA STANDARD----------	2	
- 3	S-354-1	GROMMET-ASBESTOS-----CESSNA STANDARD	2	
		ATTACHING PARTS **180 SERIAL**		
- 4	S-1021Z-8-6	SCREW CESSNA STANDARD ---------**30000 THRU**	2	
- 5	NAS446-4-3	NUT TIN A1778-8Z-3 ---------**18050951**	2	
		---*---		
- 6	MS35489-14	GROMMET VOLTAGE REGULATOR LEAD -----	1	
- 7	S-353-1	SHIELD-FIREWALL HOLE CESSNA STANDARD----------	2	
- 8	S-354-4	GROMMET-ASBESTOS-----CESSNA STANDARD	1	
		ATTACHING PARTS **182 SERIAL**		
- 9	S-1021Z-8-6	SCREW CESSNA STANDARD ----------**33000 THRU**	2	
- 10	NAS446-4-3	NUT TIN A1778-8Z-3 ----------**18253173**	2	
		---*---		
- 11	MS35489-12	GROMMET MAGNETO WIRES ----------	1	
- 12	S-353-1	SHIELD-----CESSNA STANDARD----------	2	
- 13	S-354-1	GROMMET-ASBESTOS-----CESSNA STANDARD ----------	1	
		ATTACHING PARTS		
- 14	S-1021Z-8-6	SCREW CESSNA STANDARD ----------	2	
- 15	NAS446-4-3	NUT TIN A1778-8Z-3 ----------	2	
		---*---		
- 16	MS35489-2S	GROMMET OIL TEMP LINE ----------	1	
-16A	0753003-1	BUSHING ----------	1	A
- 17	S353-2	SHIELD-----CESSNA STANDARD----------	2	
- 18	S-354-5	GROMMET-ASBESTOS-----CESSNA STANDARD ----------	1	
		ATTACHING PARTS		
- 19	S-1021Z-8-6	SCREW CESSNA STANDARD ----------	2	
- 20	NAS446-4-3	NUT TIN A1778-8Z-3 ----------	2	
		---*---		
- 21	MS35489-11	GROMMET AMMETER & STARTER RELAY----------	1	
- 22	S-353-1	SHIELD-----CESSNA STANDARD----------	2	
- 23	S-354-4	GROMMET-ASBESTOS-----CESSNA STANDARD ----------	1	
		ATTACHING PARTS		
- 24	S-1021Z-8-6	SCREW CESSNA STANDARD ----------	2	
- 25	NAS446-4-3	NUT TIN A1778-8Z-3 ----------	2	
		---*---		
- 26	MS35489-8	GROMMET TACHOMETER SHAFT ----------	1	
- 27	S-353-4	SHIELD-FIREWALL HOLE CESSNA STANDARD----------	2	
- 28	S-354-5	GROMMET-ASBESTOS-----CESSNA STANDARD ----------	1	
		ATTACHING PARTS		
- 29	S-1021Z-8-6	SCREW CESSNA STANDARD ----------	2	
- 30	NAS446-4-3	NUT TIN A1778-8Z-3 ----------	2	
		---*---		
- 31	MS35489-20	GROMMET BATTERY CABLE ----------	1	
- 32	S-354-4	GROMMET-ASBESTOS-----CESSNA STANDARD ----------	1	
- 33	0713003-51	FAIRLEAD ----------	1	
- 34	S-353-1	SHIELD-FIREWALL HOLE CESSNA STANDARD----------	2	
		ATTACHING PARTS		
- 35	S-1021Z-8-6	SCREW CESSNA STANDARD ----------	2	
- 36	NAS446-4-3	NUT TIN A1778-8Z-3 ----------	2	
		---*---		

A---180 SERIAL 50436 THRU 18050951
182 SERIAL 51767 THRU 18253173
B---180 SERIAL 30000 THRU 18050951
182 SERIAL 33000 THRU 18253173

Fuselage (Cont)

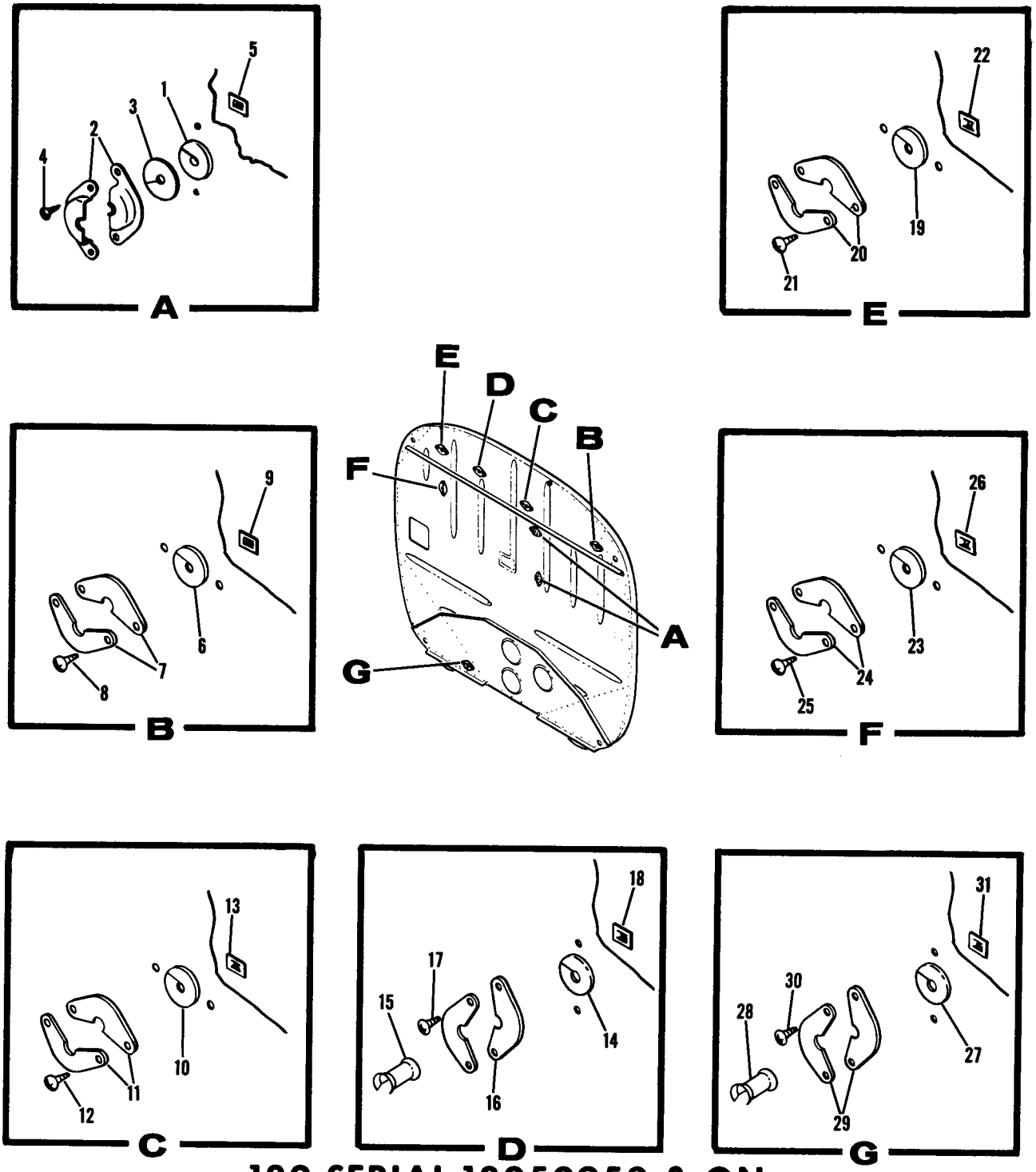

180 SERIAL 18050952 & ON
182 SERIAL 18253174 & ON

Figure 31A. Firewall Grommets Installation

FIGURE AND INDEX NO.	PART NUMBER	DESCRIPTION 1 2 3 4 5 6 7	UNITS PER ASSY	USABLE ON CODE
31A-		GROMMETS INSTALLATION-FIREWALL	NP	A
- 1	MS35489-11	GROMMET PROPELLER & THROTTLE CONTROL	2	
- 2	S-352	SHIELD-FIREWALL HOLE CESSNA STANDARD	2	
- 3	S-354-1	GROMMET-ASBESTOS-----CESSNA STANDARD	2	
		ATTACHING PARTS		
- 4	S-1021Z-8-6	SCREW CESSNA STANDARD	2	
- 5	NAS446-4-3	NUT	2	
		---*---		
- 6	NAS557-8A	GROMMET VOLTAGE REGULATOR LEAD	1	
- 7	S-1095-4	SHIELD HALF-----CESSNA STANDARD	2	
		ATTACHING PARTS		
- 8	S-1021Z-8-8	SCREW CESSNA STANDARD	2	
- 9	NAS446-4-3	NUT	2	
		---*---		
- 10	NAS557-6A	GROMMET MAGNETO LEADS	1	
- 11	S-1095-3	SHIELD HALF-----CESSNA STANDARD	2	
		ATTACHING PARTS		
- 12	S-1021Z-8-8	SCREW CESSNA STANDARD	2	
- 13	NAS446-4-3	NUT	2	
		---*---		
- 14	NAS557-4A	GROMMET OIL TEMPERATURE LINE	1	
- 15	0753003-1	BUSHING	1	
- 16	S-1095-2	SHIELD HALF-----CESSNA STANDARD	2	
		ATTACHING PARTS		
- 17	S-1021Z-8-6	SCREW CESSNA STANDARD	2	
- 18	NAS446-4-3	NUT	2	
		---*---		
- 19	NAS557-6A	GROMMET THERMOCOUPLE & STARTER RELAY LEADS	1	
- 20	S-1095-3	SHIELD HALF-----CESSNA STANDARD	2	
		ATTACHING PARTS		
- 21	S-1021Z-8-8	SCREW CESSNA STANDARD	2	
- 22	NAS446-4-3	NUT	2	
		---*---		
- 23	NAS557-4A	GROMMET TACHOMETER SHAFT	1	
- 24	S-1095-2	SHIELD HALF-----CESSNA STANDARD	2	
		ATTACHING PARTS		
- 25	S-1021Z-8-6	SCREW CESSNA STANDARD	2	
- 26	NAS446-4-3	NUT	2	
		---*---		
- 27	NAS557-8A	GROMMET BATTERY CABLE	1	
- 28	0753003-74	FAIRLEAD	1	
- 29	S-1095-4	SHIELD HALF-----CESSNA STANDARD	2	
		ATTACHING PARTS		
- 30	S-1021Z-8-8	SCREW CESSNA STANDARD	2	
- 31	NAS446-4-3	NUT	2	
		---*---		

180 SERIAL 18050952 & ON

182 SERIAL 18253174 & ON

A---180 SERIAL 18050952 & ON
182 SERIAL 18253174 & ON

Fuselage (Cont)

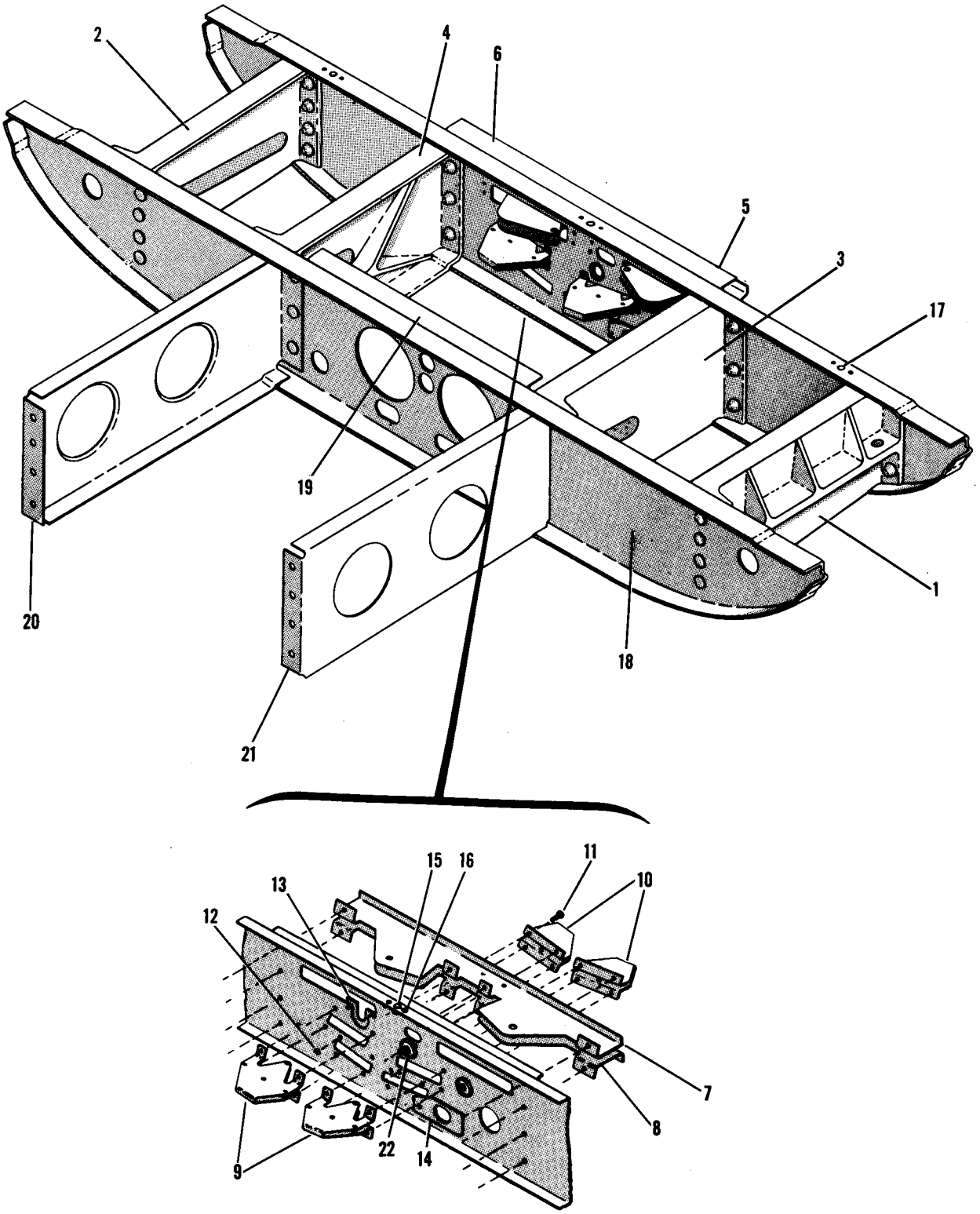

182 ALL SERIALS

Figure 32. Landing Gear Bulkhead Assembly

FIGURE AND INDEX NO.	PART NUMBER	DESCRIPTION 1 2 3 4 5 6 7	UNITS PER ASSY	USABLE ON CODE
32-	0511289-4	BULKHEAD ASSEMBLY-LANDING GEAR STA 44.00 TO 65.33	1	A
- 1	0541121-1	SUPPORT-LANDING GEAR OUTBOARD LH	1	
- 2	0541121-2	SUPPORT-LANDING GEAR OUTBOARD RH	1	
- 3	0541122-1	SUPPORT-LANDING GEAR INBOARD LH	1	
- 4	0541122-2	SUPPORT-LANDING GEAR INBOARD RH	1	
- 5	0511287	BULKHEAD-LANDING GEAR STA 65.33	1	
- 6	0511289-2	ANGLE-BULKHEAD REINFORCEMENT	1	
- 7	0512132-6	BRACKET ASSEMBLY-AILERON PULLEY UPPER	1	
- 8	0512132-1	BRACKET ASSEMBLY-AILERON PULLEY LOWER	1	
- 9	0512128	BRACKET-FLAP PULLEY	2	
- 10	0512129	BRACKET-FLAP PULLEY	2	
- 11	AN520-10R7	SCREW	8	
- 12	MS20365-1032C	NUT	8	
- 13	0512152	RUB STRIP	1	
- 14	0512124-15	FAIRLEAD	1	
- 15	0511289-1	BLOCK	1	
- 16	NAS680A3	NUTPLATE	1	
- 17	NAS680A4	NUTPLATE	1	
- 18	0511281	BULKHEAD-LANDING GEAR STA 56.70	1	
- 19	0511289-3	ANGLE-BULKHEAD REINFORCEMENT	1	
- 20	0511288-1	BULKHEAD	1	
- 21	0511288-2	BULKHEAD	1	
- 22	S-338-7	BUSHING CESSNA STANDARD	2	
		ATTACHING PARTS		
	S-339-2	CLIP CESSNA STANDARD	2	
		---*---		

182 ALL SERIALS

A---182 SERIAL 33000 & ON

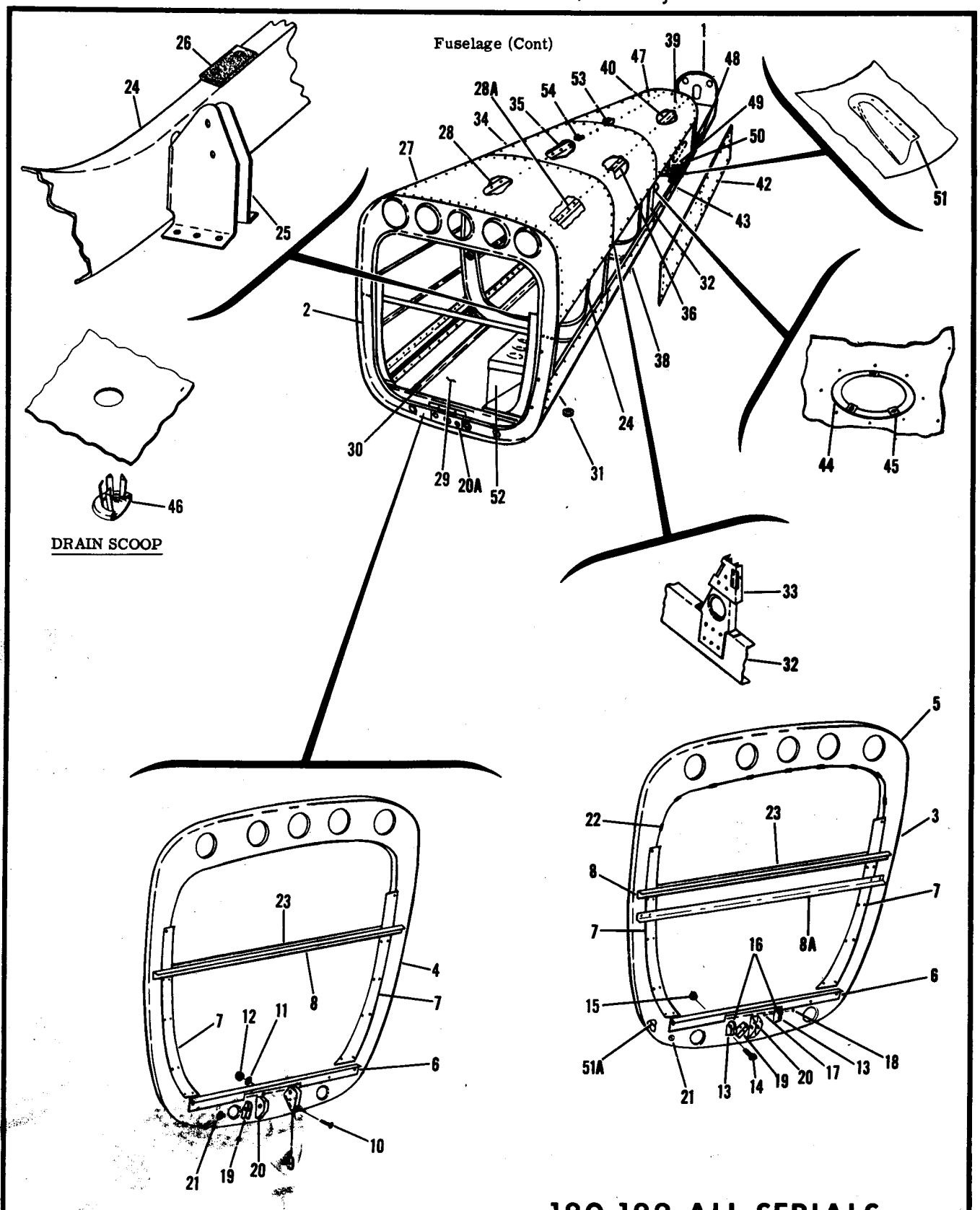

Figure 33. Fuselage Aft Section Assembly

FIGURE AND INDEX NO.	PART NUMBER	DESCRIPTION 1 2 3 4 5 6 7	UNITS PER ASSY	USABLE ON CODE
33-	0791200-1	AFT SECTION ASSEMBLY-FUSELAGE	1	A
	0791200-3	AFT SECTION ASSEMBLY-FUSELAGE	1	B
	0791200-4	AFT SECTION ASSEMBLY-FUSELAGE	1	N
	0791201-1	AFT SECTION ASSEMBLY-FUSELAGE	1	M
	0791200-6	AFT SECTION ASSEMBLY-FUSELAGE	1	Q
	0791201-3	AFT SECTION ASSEMBLY-FUSELAGE	1	K
	0791200-8	AFT SECTION ASSEMBLY-FUSELAGE	1	R
- 1	0791200-2	TAILCONE ASSEMBLY-FUSELAGE	1	E
	0791200-5	TAILCONE ASSEMBLY-FUSELAGE	1	S
	0791201-2	TAILCONE ASSEMBLY-FUSELAGE	1	M
	0791201-4	TAILCONE ASSEMBLY-FUSELAGE	1	K
	0791200-7	TAILCONE ASSEMBLY-FUSELAGE	1	R
- 2	0711100	BULKHEAD ASSEMBLY-AFT SECTION STA 108.00	1	A
	0711100-5	BULKHEAD ASSEMBLY-AFT SECTION STA 108.00	1	B
- 3	0711100-7	BULKHEAD ASSEMBLY-AFT SECTION STA 108.00	1	L
	0711100-9	BULKHEAD ASSEMBLY-AFT SECTION STA 108.00	1	Q
	0711100-8	BULKHEAD ASSEMBLY-AFT SECTION STA 108.00	1	K
	0711100-12	BULKHEAD ASSEMBLY-AFT SECTION STA 108.00	1	R
- 4	0711100-1	BULKHEAD-AFT SECTION STA 108.00	1	A
	0711100-4	BULKHEAD-AFT SECTION STA 108.00	1	B
- 5	0711100-6	BULKHEAD-AFT SECTION STA 108.00	1	J
	0711100-10	BULKHEAD-AFT SECTION STA 108.00	1	T
	0711100-11	BULKHEAD-AFT SECTION STA 108.00	1	R
- 6	0511149-1	RETAINER-INTERIOR TRIM LOWER	1	
- 7	0512121-6	PLATE-INTERIOR TRIM SIDE	2	
- 8	0512148	ANGLE-BAGGAGE SHELF	1	
	0712004-1	STIFFENER	1	R
- 8A	0710011-1	ANGLE-SEAT BACK SUPPORT	1	R
- 9	0712211	BRACKET-RUDDER CABLE PULLEY	1	E
		ATTACHING PARTS		
- 10	NAS228-4	SCREW	2	
- 11	AN960-8	WASHER	2	
- 12	MS20365-832C	NUT	2	
		---*---		
- 13	0512160	BRACKET	2	F
		ATTACHING PARTS		
- 14	AN520-10R6	SCREW	2	
- 15	MS20365-1032C	NUT	2	
		---*---		
- 16	S-378-3L	PULLEY CESSNA STANDARD	2	L
		ATTACHING PARTS		
- 17	AN4-10A	BOLT	1	
- 18	MS20365-428C	NUT	1	
		---*---		
- 19	0412467	BRACKET-STABILIZER TRIM PULLEY	1	
- 20	0510164	BRACKET-ELEVATOR CABLE PULLEY	1	
-20A	0710009-1	REINFORCEMENT-BULKHEAD	1	R
- 21	MS35489-14	GROMMET	1	
- 22	0511132	CLIP-UPHOLSTERY	9	J
	0711117-1	CLIP-UPHOLSTERY	6	K
	0711117-1	CLIP-UPHOLSTERY	10	H
	0711117-2	CLIP-UPHOLSTERY	4	K
- 23	0511145	SUPPORT ASSEMBLY-INTERIOR TRIM	1	
- 24	0712201	BULKHEAD ASSEMBLY-AFT SECTION STA 140.00	1	E
	0712201-3	BULKHEAD ASSEMBLY-AFT SECTION STA 140.00	1	F
- 25	0712209	BRACKET-RUDDER CABLE PULLEY	1	E
- 26	0712201-2	RUB STRIP	1	
- 27	0712000-10	SKIN-AFT SECTION UPPER STA 108.00 TO 140.00	1	P
	0712000-28	SKIN-AFT SECTION UPPER STA 108.00 TO 140.00	1	T
	0712000-31	SKIN-AFT SECTION UPPER STA 108.00 TO 140.00	1	R
- 28	0512000-19	STIFFENER-AFT SECTION UPPER SKIN	3	U
	0712007-4	STIFFENER-AFT SECTION UPPER SKIN	2	R
-28A	0712007-1	STIFFENER-AFT SECTION UPPER SKIN	1	R
- 29	0712000-9	SKIN-AFT SECTION LOWER STA 108.00 TO 140.00	1	U
	0712000-34	SKIN-AFT SECTION LOWER STA 108.00 TO 140.00	1	R
- 30	0712000-13	STIFFENER-AFT SECTION LOWER SKIN	4	U
	0712003-2	ANGLE-STIFFENER RH	1	R
	0712003-1	ANGLE-STIFFENER LH	1	R
- 31	MS35489-14	GROMMET	1	D
	MS35489-11	GROMMET	1	G
- 32	0712202	BULKHEAD ASSEMBLY-AFT SECTION STA 172.00	1	U
	0712202-5	BULKHEAD ASSEMBLY-AFT SECTION STA 172.00	1	R
	0712006-1	STIFFENER	1	R
- 33	0712212	BRACKET-PULLEY	1	

CONTINUED ON PAGES 82 & 82A

180-182 ALL SERIALS

FIGURE AND INDEX NO.	PART NUMBER	DESCRIPTION 1 2 3 4 5 6 7	UNITS PER ASSY	USABLE ON CODE
33- 34	0712000-5	SKIN-AFT SECTION UPPER STA 140.00 TO 172.00	1	U
	0712000-32	SKIN-AFT SECTION UPPER STA 140.00 TO 172.00	1	R
- 35	0712000-8	STIFFENER-UPPER SKIN	1	U
	0712007-6	STIFFENER-UPPER SKIN	1	R
- 36	0712000-11	STIFFENER-UPPER SKIN	1	U
	0712007-5	STIFFENER-UPPER SKIN	1	R
- 37	0712304-1	FITTING-DORSAL ATTACHMENT FRONT	1	X
	NAS395-6-3	NUTPLATE TIN A1784-8Z-3	2	
	1212002-1	FITTING-DORSAL ATTACHMENT FRONT	1	K
	F-5000-832	NUTPLATE KNM	2	
- 38	0712000-4	SKIN-AFT SECTION LOWER STA 140.00 TO 172.00	1	V
	0712000-35	SKIN-AFT SECTION LOWER STA 140.00 TO 172.00	1	R
- 39	0712000-6	SKIN-AFT SECTION ~~LOWER~~ UPPER STA 172.00 TO 209.00	1	V
	0712000-38	SKIN-AFT SECTION ~~LOWER~~ UPPER STA 172.00 TO 209.00	1	R
	0712309-11	FAIRING-RH	1	
	0712309-12	FAIRING-LH	1	
- 40	0712000-12	STIFFENER-AFT SECTION UPPER	2	V
	0712007-3	STIFFENER-AFT SECTION UPPER LH	1	R
	0712007-2	STIFFENER-AFT SECTION UPPER RH	1	R
- 41	0712304-2	FITTING-DORSAL ATTACHMENT AFT	1	V
	NAS395-18-3	NUTPLATE TIN A1787-8Z-3	2	
- 42	0712000-2	PLATE-FUSELAGE SPLICE STA 140.00 TO 209.00	2	
- 43	0712000-3	SKIN-AFT SECTION LOWER STA 172.00 TO 209.00	1	E
	0712000-17	SKIN-AFT SECTION LOWER STA 172.00 TO 209.00	1	W
	0712000-23	SKIN-AFT SECTION LOWER STA 172.00 TO 209.00	1	D
	0712000-36	SKIN-AFT SECTION LOWER STA 172.00 TO 209.00	1	R
- 44	S-226-3	DOUBLER-ACCESS OPENING	1	
- 45	NAS395-14-3	NUTPLATE TIN 1274-8Z-3	3	
- 46	S-349	SCOOP-DRAIN	7	
- 47	NAS680A08	NUTPLATE	6	
- 48	0712303-1	GUIDE-STABILIZER SEAL LH	1	
	0712303-2	GUIDE-STABILIZER SEAL RH	1	
- 49	0712309-5	BRACKET-PULLEY INBOARD LH ----SEE FIGURE 104	1	G
	0712309-6	BRACKET-PULLEY INBOARD RH ----SEE FIGURE 104	1	G
- 50	0712309-7	BRACKET-PULLEY OUTBOARD LH---- SEE FIGURE 104	1	G
	0712309-8	BRACKET-PULLEY OUTBOARD RH---- SEE FIGURE 104	1	G
- 51	0712309-9	FAIRING-TAILWHEEL STEERING CABLE LH	1	G
	0712309-10	FAIRING-TAILWHEEL STEERING CABLE RH	1	G
-51A	0712008-1	BRACKET-SEAT BELT LUG	2	R
	0712009-1	SPACER-LUG BRACKET	2	R
- 52		BOX INSTALLATION-BATTERY SEE FIGURE 34	NP	
- 53	0712304-12	FITTING-DORSAL ATTACHMENT AFT	1	R
	NAS395-18-3	NUTPLATE	2	
- 54	0712304-1	FITTING-DORSAL ATTACHMENT FRONT	1	R
	NAS395-6-3	NUTPLATE	2	

A---180 SERIAL 30000 THRU 30639
B---180 SERIAL 30640 THRU 32150
C---180 SERIAL 32151 & ON
D---182 SERIAL 33000 & ON
E---180 SERIAL 30000 THRU 32150
F---180 SERIAL 32151 & ON
182 SERIAL 33000 & ON
G---180 SERIAL 30000 & ON
H---180 SERIAL 50662 & ON
J---180 SERIAL 32151 THRU 50661
182 SERIAL 33000 THRU 52358
S-PART NOS APPEARING ON THIS PAGE ARE CESSNA STANDARD

CONTINUED ON PAGE 82A

FIGURE AND INDEX NO.	PART NUMBER	DESCRIPTION 1 2 3 4 5 6 7	UNITS PER ASSY	USABLE ON CODE
33-		K---182 SERIAL 52359 & ON L---180 SERIAL 32151 THRU 50662 182 SERIAL 33000 THRU 52358 M---182 SERIAL 33000 THRU 52358 N---180 SERIAL 32151 THRU 50661 O---180 SERIAL 50662 & ON 182 SERIAL 52359 & ON P---180 SERIAL 30000 THRU 50661 182 SERIAL 33000 THRU 52358 Q---180 SERIAL 50662 THRU 18051063 R---180 SERIAL 18051064 & ON S---180 SERIAL 32151 THRU 18051063 T---180 SERIAL 50662 THRU 18051063 182 SERIAL 52359 & ON U---180 SERIAL 30000 THRU 18051063 182 SERIAL 33000 & ON V---180 SERIAL 30000 THRU 18051063 182 SERIAL 33000 & ON W---180 SERIAL 30000 THRU 18051063 X---180 SERIAL 30000 THRU 18051063 182 SERIAL 33000 THRU 52358		

This page intentionally left blank.

Fuselage (Cont)

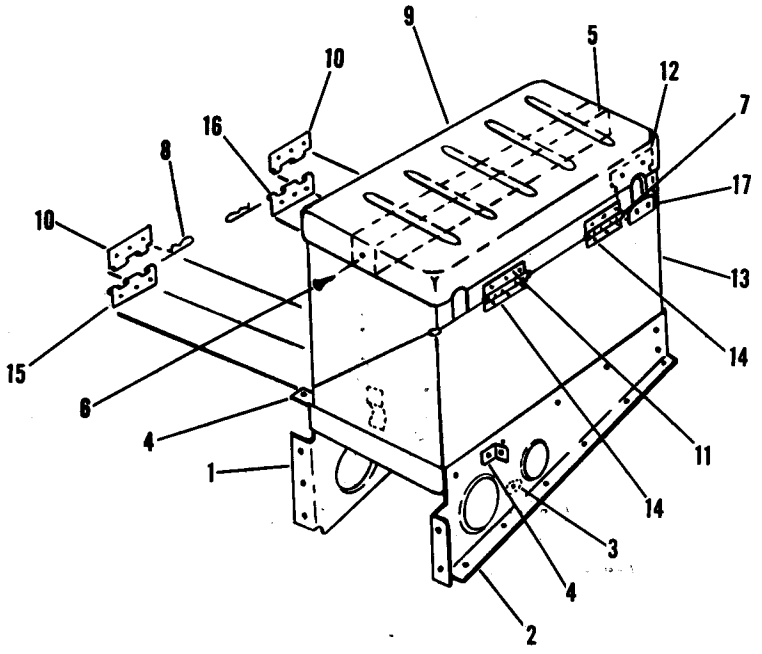

180-182 ALL SERIALS

Figure 34. Battery Box Assembly

FIGURE AND INDEX NO.	PART NUMBER	DESCRIPTION 1 2 3 4 5 6 7	UNITS PER ASSY	USABLE ON CODE
34-	0712601	BOX ASSEMBLY-BATTERY		
- 1	0712601-2	BRACKET-MOUNTING	1	
- 2	0712601-3	BRACKET ASSEMBLY-MOUNTING	1	
- 3	NAS680A4	NUTPLATE	1	
- 4	0712601-4	BRACKET-CABLE SUPPORT	2	
- 5	0413279	SPACER	1	
		ATTACHING PARTS		
- 6	AN545-6R4	SCREW	2	
		---*---		
	0412146-1	BOX ASSEMBLY-BATTERY	1	
- 7	0412151-5	PIN-HINGE	2	
- 8	AN415-2	PIN-LOCK	2	
- 9	0412147	BOX ASSEMBLY-UPPER	1	
- 10	0412151-1	HINGE-HALF LOWER	2	
- 11	0412151-4	HINGE-HALF UPPER	2	
- 12	0412470	INSULATOR	2	
- 13	0412148-1	BOX ASSEMBLY-LOWER	1	
- 14	0412151-1	HINGE-HALF UPPER	2	
- 15	0412151-2	HINGE-HALF LOWER RH	1	
- 16	0412151-3	HINGE-HALF LOWER LH	1	
- 17	0412471-3	INSULATOR	2	
	A3122-8-1	CLAMP TIN	1	
	S-307-10-0033	TUBING CESSNA STANDARD	1	

Fuselage (Cont)

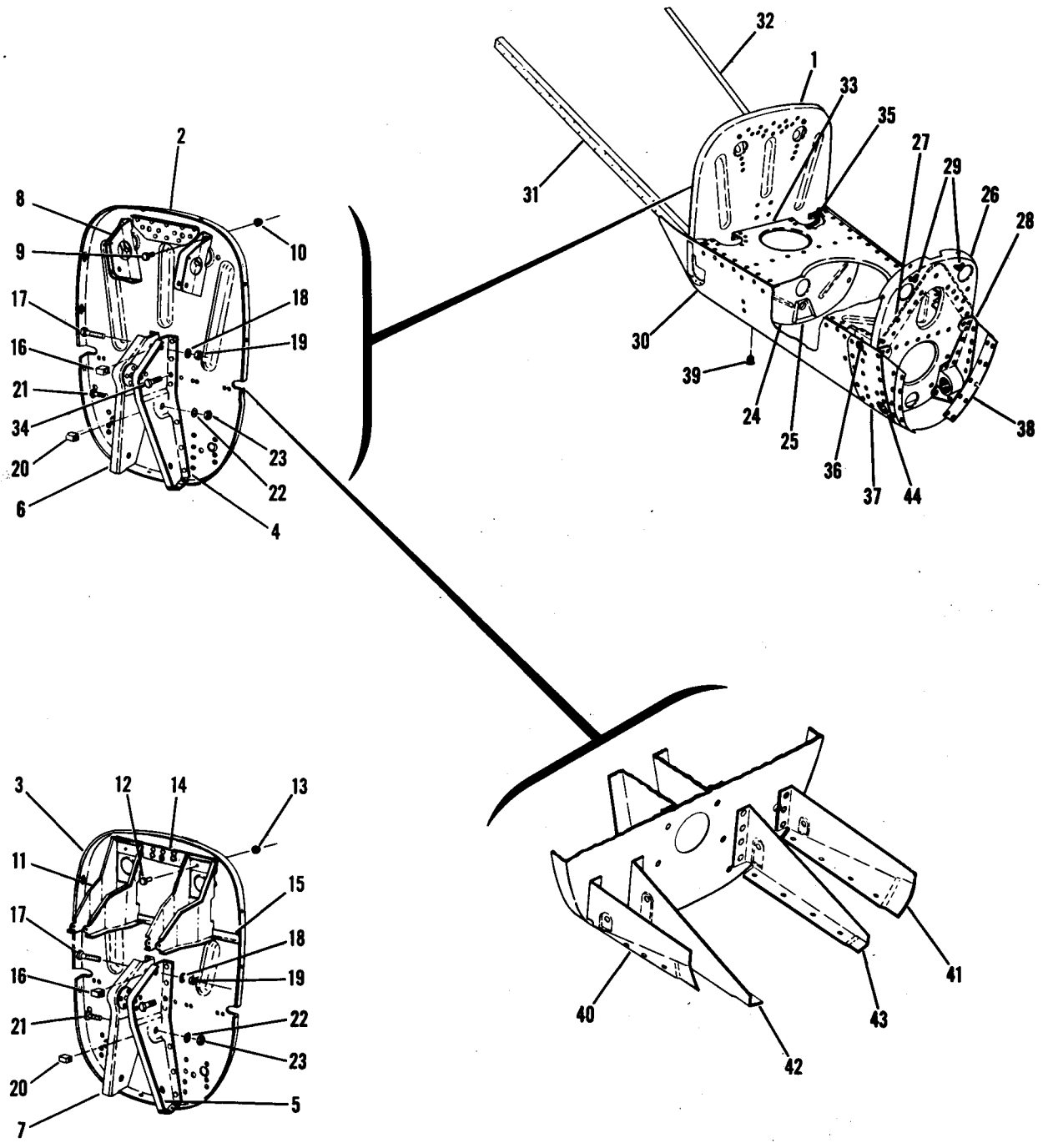

180 ALL SERIALS

Figure 35. Fuselage Tailcone Assembly

FIGURE AND INDEX NO.	PART NUMBER	DESCRIPTION 1 2 3 4 5 6 7	UNITS PER ASSY	USABLE ON CODE
35-	0791200-2	TAILCONE ASSEMBLY-FUSELAGE STA 209.00 TO 230.187	1	A
	0791200-5	TAILCONE ASSEMBLY-FUSELAGE STA 209.00 TO 230.187	1	C
	0791200-7	TAILCONE ASSEMBLY-FUSELAGE STA 201.0 TO 230.187	1	D
- 1	0712203	BULKHEAD ASSEMBLY-TAILCONE---- STA 209.00	1	A
	0712311-9	BULKHEAD ASSEMBLY-TAILCONE---- STA 209.00	1	C
	0712311-15	BULKHEAD ASSEMBLY-FUSELAGE---- STA 209.00	1	D
- 2	0712203-1	BULKHEAD-TAILCONE STA 209.00	1	A
- 3	0712311-7	BULKHEAD-TAILCONE STA 209.00	1	B
- 4	0712306-1	BRACKET ASSEMBLY-ELEVATOR BELLCRANK REAR LH	1	A
- 5	0712306-9	BRACKET ASSEMBLY-ELEVATOR BELLCRANK REAR LH	1	B
- 6	0712306-2	BRACKET ASSEMBLY-ELEVATOR BELLCRANK REAR RH	1	A
- 7	0712306-10	BRACKET ASSEMBLY-ELEVATOR BELLCRANK REAR RH	1	B
- 8	0712208	BRACKET-RUDDER PULLEY	1	A
		ATTACHING PARTS		
- 9	AN3-3A	BOLT	2	
- 10	MS20365-1032C	NUT	2	
		---*---		
- 11	0712309-4	BRACKET-RUDDER BELLCRANK	2	B
		ATTACHING PARTS		
- 12	AN3-3A	BOLT	2	
- 13	MS20365-1032C	NUT	2	
		---*---		
- 14	0712311-14	DOUBLER	1	B
- 15	0712311-3	ANGLE	1	B
- 16	0510146	STOP-ELEVATOR UPPER	1	
		ATTACHING PARTS		
- 17	AN4-12A	BOLT	1	
- 18	AN960-416	WASHER	1	
- 19	MS20365-428C	NUT	1	
		---*---		
- 20	0510146-3	STOP-ELEVATOR LOWER	1	
		ATTACHING PARTS		
- 21	AN4-14A	BOLT	1	
- 22	AN960-416	WASHER	1	
- 23	MS20365-428C	NUT	1	
		---*---		
- 24	0712204-5	BULKHEAD ASSEMBLY-TAILCONE---- STA 215.687	1	
- 25	0712204-4	BRACKET ASSEMBLY-TAILGEAR STA 215.687	1	
	0712205-12	BULKHEAD ASSEMBLY-TAILCONE---- STA 230.187	1	C
	0712205-13	BULKHEAD ASSEMBLY-TAILCONE---- STA 230.187	1	D
- 26	0712205-10	BULKHEAD-TAILCONE STA 230.187	1	
- 27	0712205-1	ANGLE-STIFFENER LH	1	C
	1212011-1	STIFFENER	1	D
	0712205-2	ANGLE-STIFFENER RH	1	C
	1212012-1	DOUBLER-INNER	1	D
- 28	0712305-3	CASTING-TAILGEAR MOUNTING LH	1	
	0712305-4	CASTING-TAILGEAR MOUNTING RH	1	
- 29	MAS450-10S	NUTPLATE	2	
	AN3-4A	BOLT-STOP	2	
- 30	0712000-7	SKIN-TAILCONE	1	
- 31	0712207-1	ANGLE-TAILCONE REINFORCEMENT LH	1	
- 32	0712207-2	ANGLE-TAILCONE REINFORCEMENT RH	1	
- 33	0712206	BULKHEAD ASSEMBLY-TAILCONE HORIZONTAL	1	
		ATTACHING PARTS		
- 34	AN3-5A	BOLT	2	
	AN960-10	WASHER	2	
	MS20365-1032C	NUT	2	
		---*---		
- 35	0712206-2	DOUBLER	1	
- 36	0712302-1	BRACKET-STABILIZER HINGE LH	1	
	0712302-2	BRACKET-STABILIZER HINGE RH	1	
- 37	0712304-3	FITTING-TAILCONE REINFORCEMENT LH	1	
	0712304-4	FITTING-TAILCONE REINFORCEMENT RH	1	
- 38	0712304-10	FITTING-STINGER ATTACHMENT	2	
- 39	S-349	SCOOP-DRAIN-----CESSNA STANDARD	2	
- 40	0712301-1	BRACKET-ACTUATOR HINGE OUTBOARD LH	1	
- 41	0712301-2	BRACKET-ACTUATOR HINGE OUTBOARD RH	1	
- 42	0712301-3	BRACKET-ACTUATOR HINGE INBOARD LH	1	
- 43	0712301-4	BRACKET-ACTUATOR HINGE INBOARD RH	1	
- 44	48143	PLUG BUTTON-----UC	1	

180 ALL SERIALS

A---180 SERIAL 30000 THRU 32150
B---180 SERIAL 32151 & ON
C---180 SERIAL 32151 THRU 18051063
D---180 SERIAL 18051064 & ON

Fuselage (Cont)

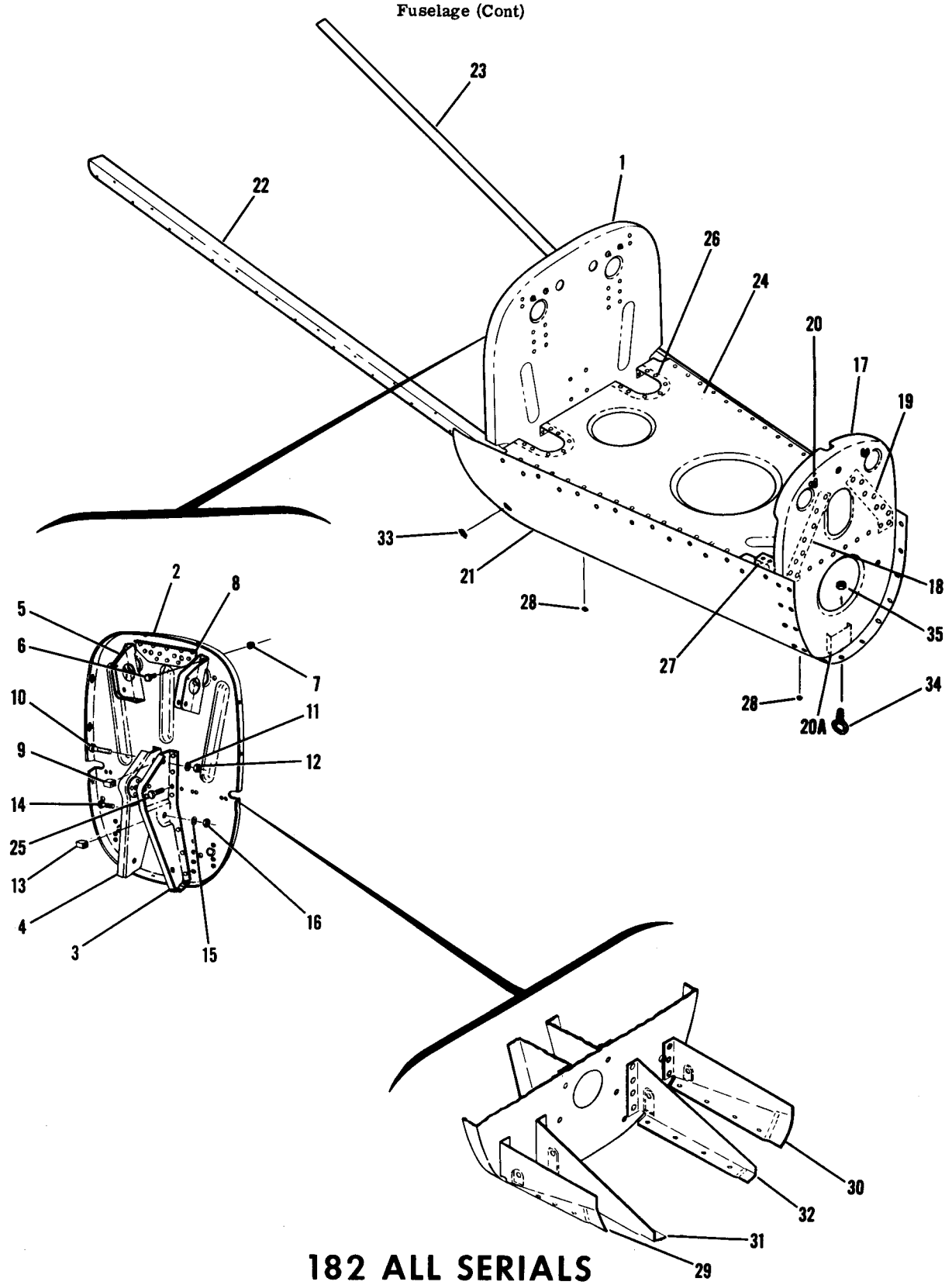

182 ALL SERIALS

Figure 36. Fuselage Tailcone Assembly

FIGURE AND INDEX NO.	PART NUMBER	DESCRIPTION 1 2 3 4 5 6 7	UNITS PER ASSY	USABLE ON CODE
36-	0791201-2	TAILCONE ASSEMBLY-FUSELAGE STA 209.00 TO 230.187	1	A
	0791201-4	TAILCONE ASSEMBLY-FUSELAGE STA 209.00 TO 230.187	1	B
- 1	0712311-4	BULKHEAD ASSEMBLY-TAILCONE---- STA 209.00	1	A
	0712311-8	BULKHEAD ASSEMBLY-TAILCONE---- STA 209.00	1	B
- 2	0712311-7	BULKHEAD-TAILCONE STA 209.00	1	
- 3	0712306-9	BRACKET ASSEMBLY-ELEVATOR BELLCRANK REAR LH	1	
- 4	0712306-10	BRACKET ASSEMBLY-ELEVATOR BELLCRANK REAR RH	1	
- 5	0712208	BRACKET-RUDDER BELLCRANK	1	
		ATTACHING PARTS		
- 6	AN3-3A	BOLT	2	
- 7	MS20365-1032C	NUT	2	
		---*---		
- 8	0712203-4	DOUBLER	1	
- 9	0510146	STOP-ELEVATOR UPPER	1	
		ATTACHING PARTS		
- 10	AN4-12A	BOLT	1	
- 11	AN960-416	WASHER	1	
- 12	MS20365-428C	NUT	1	
		---*---		
- 13	0510146-3	STOP-ELEVATOR LOWER	1	
		ATTACHING PARTS		
- 14	AN4-14A	BOLT	1	
- 15	AN960-416	WASHER	1	
- 16	MS20365-428C	NUT	1	
		---*---		
	0712205-11	BULKHEAD ASSEMBLY-TAILCONE---- STA 230.187	1	A
	1212005-1	BULKHEAD ASSEMBLY-TAILCONE---- STA 230.187	1	B
- 17	0712205-10	BULKHEAD-TAILCONE STA 230.187	1	A
	1212005-2	BULKHEAD-TAILCONE STA 230.187	1	B
- 18	0712205-1	ANGLE-STIFFENER LH	1	
- 19	0712205-2	ANGLE-STIFFENER RH	1	
	1212011-1	STIFFENER	1	B
	1212012-1	DOUBLER-INNER	1	B
- 20	NAS450-10S	NUTPLATE	2	
-20A	1212004-1	BRACKET-TIE DOWN SUPPORT	1	B
- 21	0712000-22	SKIN-TAILCONE	1	
- 22	0712207-1	ANGLE-TAILCONE REINFORCEMENT LH	1	
- 23	0712207-2	ANGLE-TAILCONE REINFORCEMENT RH	1	
- 24	0712206	BULKHEAD ASSEMBLY-TAILCONE HORIZONTAL	1	
		ATTACHING PARTS		
- 25	AN3-5A	BOLT	2	
	AN960-10	WASHER	2	
	MS20365-1032C	NUT	2	
		---*---		
- 26	0712206-2	DOUBLER	2	
- 27	0712302-1	BRACKET-STABILIZER HINGE LH	1	
	0712302-2	BRACKET-STABILIZER HINGE RH	1	
- 28	S-349	SCOOP-DRAIN-----CESSNA STANDARD	2	
- 29	0712301-1	BRACKET-ACTUATOR HINGE OUTBOARD LH	1	
- 30	0712301-2	BRACKET-ACTUATOR HINGE OUTBOARD RH	1	
- 31	0712301-3	BRACKET-ACTUATOR HINGE INBOARD LH	1	
- 32	0712301-4	BRACKET-ACTUATOR HINGE INBOARD RH	1	
- 33	51161	PLUG BUTTON-----UC	2	
- 34	0422344	RING-MOORING	1	
		ATTACHING PARTS		
- 35	MS20365-524C	NUT	1	
		---*---		

182 ALL SERIALS

A---182 SERIAL 33000 THRU 52358
B---182 SERIAL 52359 & ON

Fuselage (Cont)

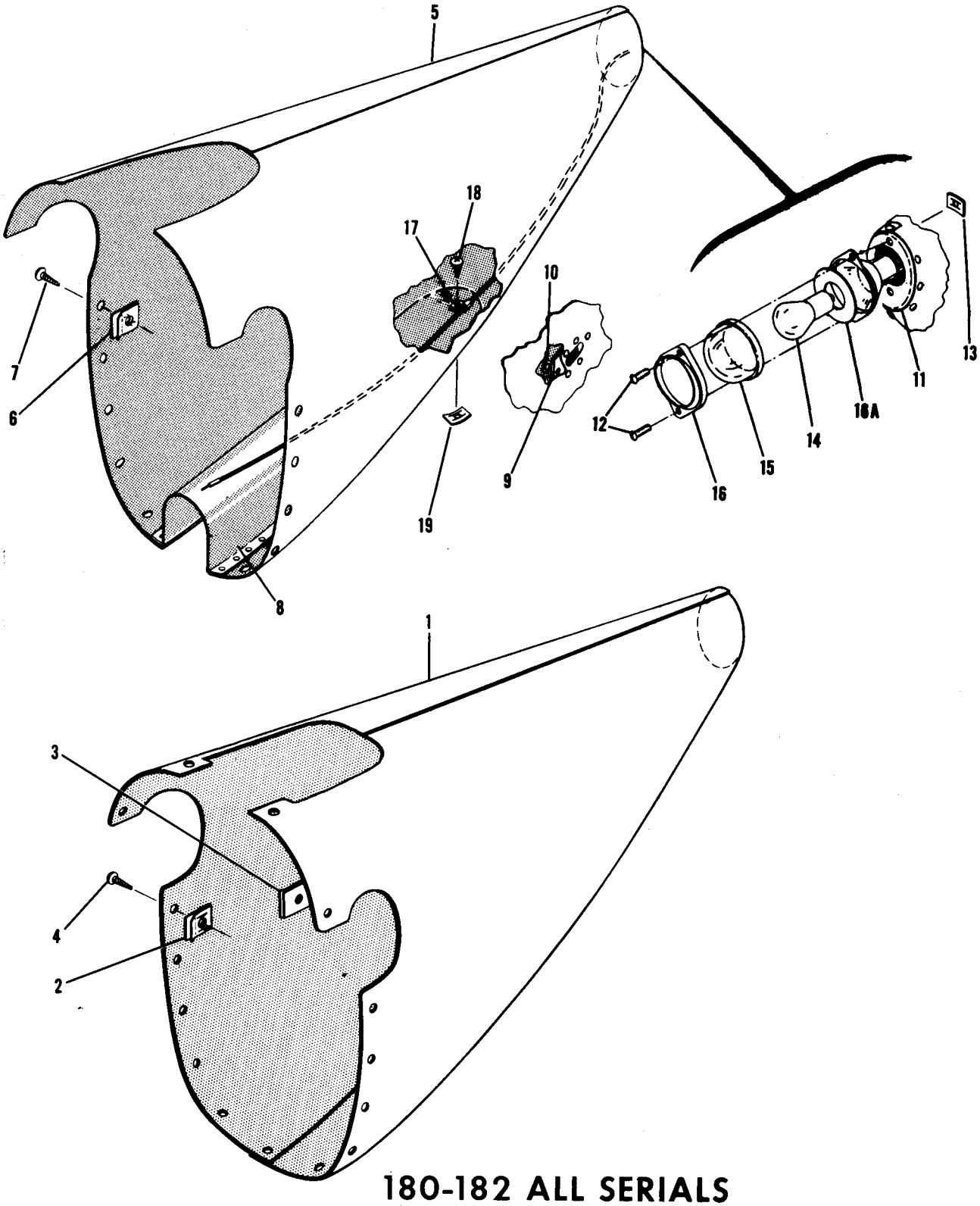

180-182 ALL SERIALS

Figure 37. Stinger Installation

FIGURE AND INDEX NO.	PART NUMBER	DESCRIPTION 1 2 3 4 5 6 7	UNITS PER ASSY	USABLE ON CODE
37-		STINGER INSTALLATION	NP	
- 1	0712401-3	STINGER ASSEMBLY	1	A
	0712401-9	STINGER ASSEMBLY	1	F
		ATTACHING PARTS		
- 2	NAS395-14-3	NUTPLATE TIN 1274-8Z-3	15	
- 3	NAS395-10-3	NUTPLATE TIN A7852-8Z-3	4	
- 4	S-1021Z-8-8	SCREW CESSNA STANDARD ---*---	19	
- 5	0712400 *	STINGER ASSEMBLY	1	B
	0712400-9 *	STINGER ASSEMBLY	1	C
		ATTACHING PARTS		
- 6	NAS395-17-3	NUTPLATE TIN 1274-8Z-3	10	D
- 7	S-1021Z-8-8	SCREW CESSNA STANDARD ---*---	10	D
- 8	0712400-3	PAN-STINGER LOWER	1	D
- 9	0712400-6	FAIRLEAD	2	E
- 10	AN960-A3L	WASHER	12	E
- 11	0712400-4	PAN-TAIL LIGHT	1	
	0433006-7	LIGHT ASSEMBLY-TAIL	1	
		ATTACHING PARTS		
- 12	S-1021Z-4-8	SCREW CESSNA STANDARD	2	
- 13	NAS395-1-3	NUT TIN A6187-4Z-3 ---*---	2	
- 14	MS35478-5	LAMP	1	
- 15	0433006-2	LENS-CLEAR	1	
- 16	0433006-12	RETAINER-LENS	1	
-16A	0433006-11	GASKET	1	
- 17	S-1155-2	CLAMP-PLASTIC HLBI	1	B
- 18	S-1021Z-8-8	SCREW CESSNA STANDARD	1	B
- 19	NAS446-3-3	NUT TIN A1778-8Z-3	1	B

180-182 ALL SERIALS

A---182 SERIAL 33000 THRU 52358
B---180 SERIAL 30000 THRU 32150
C---180 SERIAL 32151 & ON
D---180 SERIAL 30000 & ON
E---180 SERIAL 30000 THRU 31946
F---182 SERIAL 52359 & ON
*NOTE. THIS ASSEMBLY INCLUDES ALL NECESSARY WIRING.

Alighting Gear

WHEEL ALIGNMENT SHIM CHART

SHIM PART NO.	POSITION OF THICKEST CORNER OF SHIM	CORRECTION IMPOSED ON WHEEL			
		TOE-IN	TOE-OUT	POS. CAMBER	NEG. CAMBER
0541111-2	UP & FWD	----	.11"	2°56'	----
	UP & AFT	.25"	----	2°17'	----
	DOWN & FWD	----	.25"	----	2°17'
	DOWN & AFT	.11"	----	----	2°56'
0441139-5	UP & FWD	----	.10"	0°30'	----
	UP & AFT	.12"	----	0°5'	----
	DOWN & FWD	----	.12"	----	0°5'
	DOWN & AFT	.10"	----	----	0°30'
0441139-6	UP & FWD	----	.20"	1°0'	----
	UP & AFT	.25"	----	0°10'	----
	DOWN & FWD	----	.25"	----	0°10'
	DOWN & AFT	.20"	----	----	1°0'

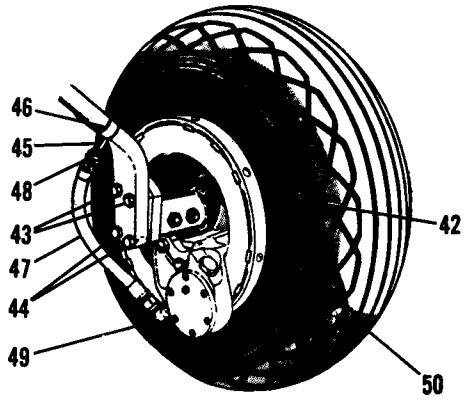

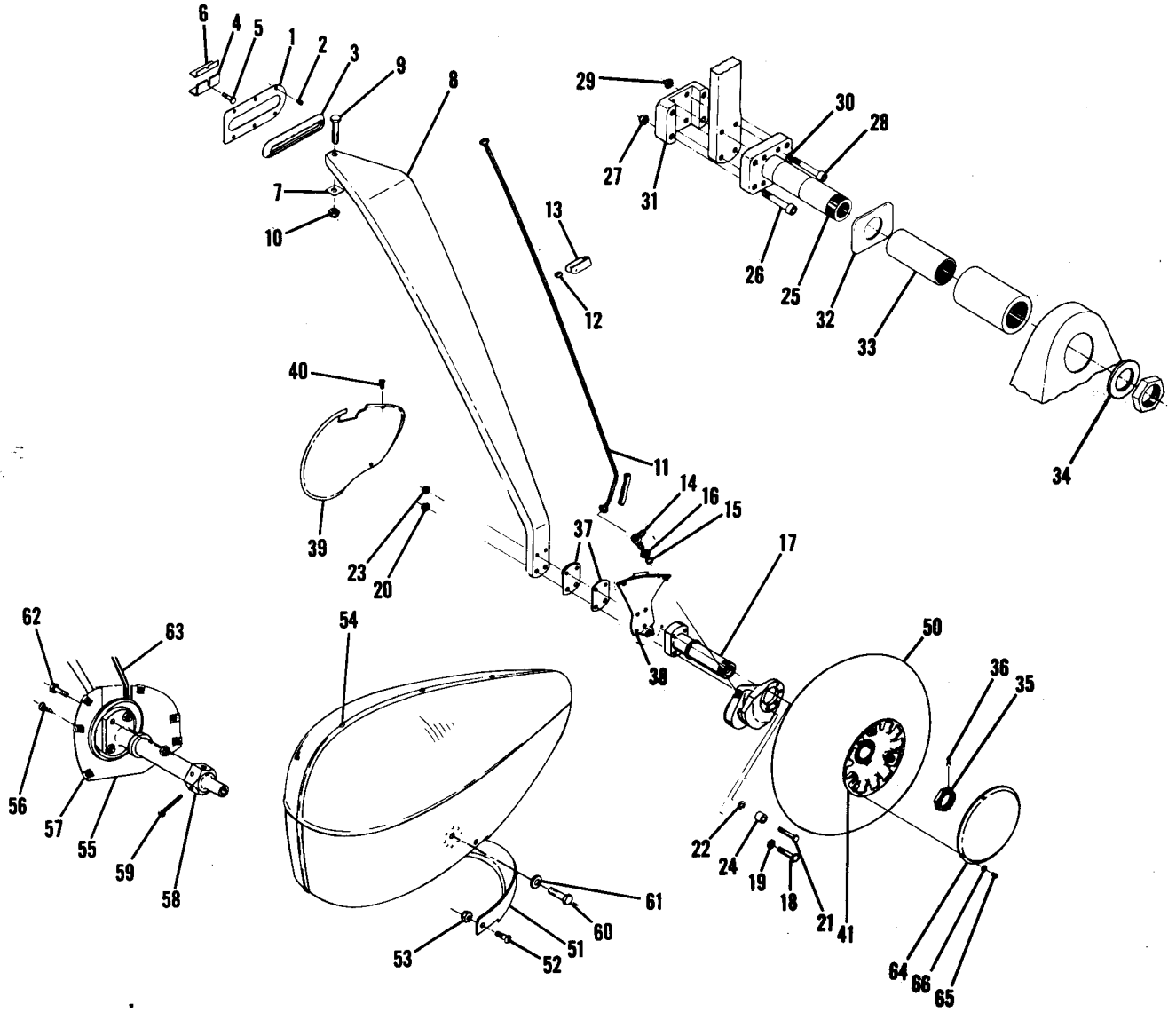

180 ALL SERIALS

Figure 38. Landing Gear Installation

FIGURE AND INDEX NO.	PART NUMBER		DESCRIPTION	UNITS PER ASSY	USABLE ON CODE
			1 2 3 4 5 6 7		
38-			LANDING GEAR INSTALLATION-MAIN	NP	G
- 1	0713018-5		PLATE-LANDING GEAR FILLET LH ---180 ALL---	1	
	0713018-4		PLATE-LANDING GEAR FILLET RH ---SERIALS---	1	
			ATTACHING PARTS		
- 2	S-1021Z-8-8		SCREW CESSNA STANDARD	7	
			---*---		
- 3	0713018-3		SEAL-LANDING GEAR	2	
- 4	0441115-4		WEDGE-LANDING GEAR SUPPORT	4	
	0441115-2	*	WEDGE-LANDING GEAR SUPPORT---- HEAVY DUTY	4	
			ATTACHING PARTS		
- 5	AN4-11A		BOLT	2	
			---*---		
- 6	0741007-1		SHIM-SPRING ALIGNMENT	AR	
- 7	0541105		SHIM-SPRING ADJUSTMENT	AR	
- 8	0741001-1		SPRING-LANDING GEAR LH	1	A
	0741001-2		SPRING-LANDING GEAR RH	1	A
	0741001-3		SPRING-LANDING GEAR LH	1	B
	0741001-4		SPRING-LANDING GEAR RH	1	B
	0741001-5	*	SPRING-LANDING GEAR LH HEAVY DUTY	1	B
	0741001-6	*	SPRING-LANDING GEAR RH HEAVY DUTY	1	B
			ATTACHING PARTS		
- 9	AN7-20A		BOLT	1	
- 10	MS20365-720C		NUT	1	
			---*---		
- 11	0500106-86		LINE-BRAKE LH	1	C
	0500106-87		LINE-BRAKE RH	1	C
	0500106-165		LINE-BRAKE LH	1	D
	0500106-166		LINE-BRAKE RH	1	D
- 12	0441119		HOSE-BRAKE LINE PROTECTOR	2	
- 13	0741000-7		BRACKET-BRAKE LINE RETAINING	2	
- 14	AN833-4D		ELBOW	2	E
- 15	AN9028 4		GASKET	2	E
- 16	AN924-4D		NUT	2	E
- 17	0541124-1		AXLE-LANDING GEAR	2	
	1441003-1		AXLE-LANDING GEAR HEAVY DUTY	2	
			ATTACHING PARTS		
- 18	AN6-25A		BOLT-LOWER	2	
	NAS146-47		BOLT-LOWER HEAVY DUTY	2	
- 19	AN960-616		WASHER	AR	
	MS20002C6		WASHER-----HEAVY DUTY	AR	
- 20	MS20365-624C		NUT	2	
- 21	AN5-25A		BOLT	2	
	NAS145-45		BOLT HEAVY DUTY	2	
- 22	AN960-516		WASHER	AR	
	MS20002C5		WASHER-----HEAVY DUTY	AR	
- 23	MS20365-524C		NUT	2	
- 24	0541103-16		BUSHING	1	
			---*---		
	0741008-5		AXLE ASSEMBLY-SKI LANDING GEAR-----SKI ONLY		
- 25	0741103		AXLE-SKI LANDING GEAR	1	
			ATTACHING PARTS		
- 26	NAS146-35		BOLT	6	
- 27	MS20365-624C		NUT	6	
- 28	NAS145-35		BOLT	2	
- 29	MS20365-524C		NUT	2	
- 30	MS20002C5		WASHER	2	
- 31	0741008-1		SHOE	1	
			---*---		
- 32	0741008-2		WASHER	1	
- 33	0741008-4		BUSHING	1	
- 34	0741008-3		WASHER	1	
- 35	S-1117-24		NUT-AXLE CESSNA STANDARD	2	
- 36	MS24665-351		PIN-COTTER	2	
- 37	0441139-5		SHIM-LANDING GEAR	AR	
	0441139-6		SHIM-LANDING GEAR	AR	
	0541111-2		SHIM-LANDING GEAR	AR	
- 38	0741005-1		BRACKET ASSEMBLY-WHEEL FAIRING ATTACHMENT LH	1	M
	0741005-2		BRACKET ASSEMBLY-WHEEL FAIRING ATTACHMENT RH	1	M
- 39	0741005-7		FAIRING-WHEEL INNER LH	1	M
	0741005-8		FAIRING-WHEEL INNER RH	1	M
			ATTACHING PARTS		
- 40	AN507-1032R8		SCREW	6	
			---*---		

CONTINUED ON PAGE 92

FIGURE AND INDEX NO.	PART NUMBER	DESCRIPTION 1 2 3 4 5 6 7	UNITS PER ASSY	USABLE ON CODE
38- 41		WHEEL & BRAKE ASSEMBLIES-FIXED GEAR-----SEE FIGURE 129 ----	1	E
- 42		WHEEL & BRAKE ASSEMBLIES-CROSSWIND GEAR SEE FIGURE 132	1	F
		CROSSWIND GEAR INSTALLATION SEE FIGURE 132 ----------	1	E
	0441150-8	WHEEL BRAKE & COLLAR ASSEMBLY-CROSSWIND LH ----------	1	
	0441150-9	WHEEL BRAKE & COLLAR ASSEMBLY-CROSSWIND RH ----------	1	
		ATTACHING PARTS		
- 43	AN5H12	BOLT----------	2	
	AN960-516	WASHER ----------	2	
- 44	AN76-11	BOLT----------	2	
	AN960-616L	WASHER ----------	2	
		---*---		
- 45	0500106-88	LINE-BRAKE ----------	1	C
	0500106-169	LINE-BRAKE ----------	1	D
		ATTACHING PARTS		
- 46	0741004	CLAMP ----------	1	
	0441119	HOSE-BRAKE LINE PROTECTOR ----------	1	
	MS20365-832C	NUT ----------	1	
	AN515-8R10	SCREW ----------	1	
		---*---		
- 47	S-1167-4-0100	HOSE ASSEMBLY-BRAKE LINE---- CESSNA STANDARD ----------	1	
- 48	AN815-4D	UNION ----------	1	
- 49	AN775-4	BOLT----------	1	
	AN776-4D	ELBOW ----------	1	
	AN901-4C	GASKET ----------	2	
- 50	0441016-24	TIRE-6.00X6-----6 PLY----------	1	
	0441016-12	TIRE-6.00X6-----4 PLY----------	1	
	0441016-13	TUBE-6.00X6----------	1	
		FAIRING INSTALLATION-MAIN WHEEL ----------	1	H
	0441143-50	FAIRING ASSEMBLY-COMPLETE LH----------	1	
	0441143-51	FAIRING ASSEMBLY-COMPLETE RH----------	1	
- 51	0441143-11	SCRAPER-MUD ----------	1	
		ATTACHING PARTS		
- 52	AN520-10R6	SCREW ----------	2	
- 53	MS20364-1032C	NUT ----------	2	
		---*---		
- 54	S-1023A-4-6	SCREW CESSNA STANDARD ----------	12	
- 55	0441143-8	PLATE-MOUNTING LH ----------	1	
	0441143-9	PLATE-MOUNTING RH ----------	1	
		ATTACHING PARTS		
- 56	S-1021Z-10-6	SCREW CESSNA STANDARD ----------	5	
- 57	NAS395-28-3	NUT TIN A9031-10Z-3 ----------	5	
		---*---		
- 58	0441130	NUT-WHEEL FAIRING SUPPORT USED WITH FAIRINGS ONLY----	1	
		ATTACHING PARTS		
- 59	MS24665-362	PIN-COTTER ----------	1	
		---*---		

CONTINUED ON PAGE 92A

FIGURE AND INDEX NO.	PART NUMBER	DESCRIPTION 1 2 3 4 5 6 7	UNITS PER ASSY	USABLE ON CODE
38- 60	AN6-5A	BOLT	1	
- 61	AN936-A616	WASHER	1	
- 62	AN5-25A	BOLT	1	
- 63	0500106-117	LINE-BRAKE LH	1	A
	0500106-118	LINE-BRAKE RH	1	A
	0500106-167	LINE-BRAKE LH	1	B
	0500106-168	LINE-BRAKE RH	1	B
- 64	0741006	FAIRING	2	H
	0741006-1	FAIRING	2	J
	0741017-1	HUB CAP	2	K
	0741018-1	HUB CAP	2	N
	1241063-2	HUB CAP	2	P
		ATTACHING PARTS		
- 65	AN515-6R4	SCREW	3	L
- 66	AN936A6	WASHER	3	L
		---#---		
		A---180 SERIAL 30000 THRU 31260		
		B---180 SERIAL 31261 & ON		
		C---180 SERIAL 30000 THRU 31260 EXCEPT 31156		
		D---180 SERIAL 31156 & 31261 & ON		
		E---180 SERIAL 30000 THRU 32661		
		F---180 SERIAL 32662 & ON		
		G---180 SERIAL 30000 & ON		
		H---180 SERIAL 30000 THRU 50105		
		J---180 SERIAL 50106 THRU 50465		
		K---180 SERIAL 50466 THRU 50661		
		L---180 SERIAL 30000 THRU 50465		
		M---180 SERIAL 30000 THRU 50661		
		N---180 SERIAL 50662 THRU 18051015		
		P---180 SERIAL 18051016 & ON		
		*NOTE. USE 0441115-2 WEDGE WITH HEAVY DUTY LANDING GEAR SPRINGS 0741001-5 & -6 ONLY.		
		NOTE. FOR ACCESSORY KIT LISTINGS REFER TO PAGES 372 THRU 374B		

This page intentionally left blank.

FIGURE AND INDEX NO.	PART NUMBER		DESCRIPTION 1 2 3 4 5 6 7	UNITS PER ASSY	USABLE ON CODE
39-			LANDING GEAR INSTALLATION-MAIN	NP	H
- 1	0511071-1		PLATE-LH	1	N
	0511071-2		PLATE-RH	1	N
	0511071-4		PLATE-LH	1	P
	0511071-3		PLATE-RH	1	P
			ATTACHING PARTS		
- 2	S-1021Z-8-8		SCREW	6	
			---*---		
- 2A	0541105		SHIM-SPRING ADJUSTMENT	AR	
- 3	0741009-5		SPRING-LANDING GEAR LH	1	A
	0741009-4		SPRING-LANDING GEAR RH	1	A
	0741011-5		SPRING-LANDING GEAR LH	1	B
	0741011-4		SPRING-LANDING GEAR RH	1	B
	0741011-7		SPRING-LANDING GEAR LH	1	R
	0741011-6		SPRING-LANDING GEAR RH	1	R
	0741011-10	*	SPRING-LANDING GEAR RH	1	P
	0741011-11	*	SPRING-LANDING GEAR LH	1	P
	0741013-2		SPRING-LANDING GEAR RH	1	T
	0741013-1		SPRING-LANDING GEAR LH	1	T
			ATTACHING PARTS		
- 4	AN6-16A		BOLT	1	
	AN6-17A		BOLT ALT	1	
- 5	AN960D616		WASHER	2	
- 6	MS20365-524C		NUT	1	
- 7	0541153		U-BOLT	1	
- 8	AN960D716		WASHER	2	
- 9	MS20365-720C		NUT	2	
			---*---		
- 10	0741015-1		TREAD-STEP	1	G
- 11	0741014-1	*	STEP-LH	1	G
	0741019-1		STEP-LH	1	T
	0741014-2	*	STEP-RH	1	G
	0741019-2		STEP-RH	1	T
-11A	0741010-2		BRACKET ASSEMBLY-RH	1	A
	0741010-1		BRACKET ASSEMBLY-LH	1	A
	0741010-6		BRACKET ASSEMBLY-RH	1	Y
	0741010-5		BRACKET ASSEMBLY-LH	1	Y
- 12	0741016-1		CLIP-STEP	1	G
			ATTACHING PARTS		
- 13	S-1021Z-8-8		SCREW	1	
			---*---		
- 14	0511072		SEAL	1	
- 15	0500106-187		LINE-BRAKE LH	1	N
	0500106-283	*	LINE-BRAKE LH	1	P
	0500106-311		LINE-BRAKE LH	1	T
	0500106-188		LINE-BRAKE RH	1	N
	0500106-284	*	LINE-BRAKE RH	1	P
	0500106-312		LINE-BRAKE RH	1	T
			ATTACHING PARTS		
- 16	0741000-7		BRACKET-BRAKE LINE RETAINER	1	N
- 17	0441119		HOSE-BRAKE LINE PROTECTOR	1	N
- 18	AN833-4D		ELBOW	1	
- 19	AN902B4		GASKET	1	
- 20	AN924-4D		NUT	1	
- 21	0541156-1		STRAP-BRAKE LINE LH	1	
	0541156-2		STRAP-BRAKE LINE RH	1	
- 22	A3046A4-92		CLAMP TIN	1	
- 23	NAS220-6		SCREW	1	
- 24	MS20365-832C		NUT	1	
			---*---		
- 25	0541154-1		STEP	2	V
			ATTACHING PARTS		
- 26	NAS221-9		SCREW	1	
- 27	MS20365-1032C		NUT	2	
- 28	AN507-1032R10		SCREW	1	
			---*---		
- 29	0541124-1		AXLE	2	

182 ALL SERIALS

S-PART NOS APPEARING ON THIS PAGE ARE CESSNA STANDARD

CONTINUED ON PAGES 94, 95, & 95A

Alighting Gear (Cont)

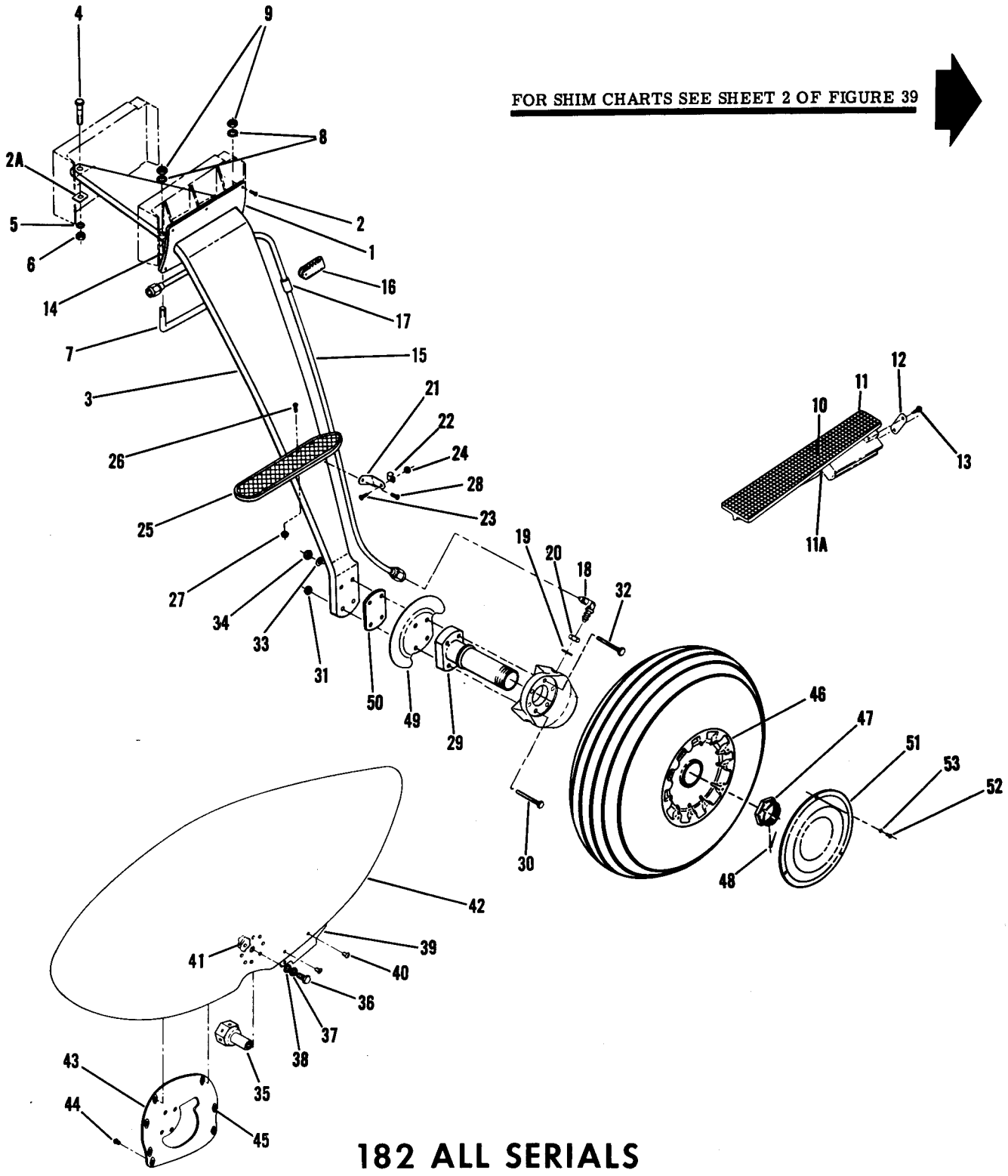

182 ALL SERIALS

Figure 39. Main Landing Gear Installation
(SHEET 1)

SHIM CHARTS

MODEL 182 SERIAL 33000 thru 33842

SHIM PART NO.	POSITION OF THICKEST CORNER OR EDGE OF SHIM	CORRECTION IMPOSED ON WHEEL			
		TOE-IN	TOE-OUT	POS. CAMBER	NEG. CAMBER
0541157-1	AFT FWD	.06" ----	---- .06"	---- 0°2'	0°2' ----
0541157-2	UP DOWN	.004" ----	---- .004"	0°30' ----	---- 0°30'
0541111-2	UP & FWD UP & AFT DOWN & FWD DOWN & AFT	---- .21" ---- .16"	.16" ---- .21" ----	2°46' 2°34' ---- ----	---- ---- 2°34' 2°46'
0441139-5	UP & FWD UP & AFT DOWN & FWD DOWN & AFT	---- .12" ---- .11"	.11" ---- .12" ----	0°22' 0°14' ---- ----	---- ---- 0°14' 0°22'
0441139-6	UP & FWD UP & AFT DOWN & FWD DOWN & AFT	---- .23" ---- .22"	.22" ---- .23" ----	0°44' 0°28' ---- ----	---- ---- 0°28' 0°44'

MODEL 182 SERIAL 33843 thru 53007

SHIM PART NO.	POSITION OF THICKEST CORNER OR EDGE OF SHIM	CORRECTION IMPOSED ON WHEEL			
		TOE-IN	TOE-OUT	POS. CAMBER	NEG. CAMBER
0541157-1	AFT FWD	.06" ----	---- .06"	---- 0°3'	0°3' ----
0541157-2	UP DOWN	.006" ----	---- .006"	0°30' ----	---- 0°30'
0541111-2	UP & FWD UP & AFT DOWN & FWD DOWN & AFT	---- .23" ---- .15"	.15" ---- .23" ----	2°50' 2°29' ---- ----	---- ---- 2°29' 2°50'
0441139-5	UP & FWD UP & AFT DOWN & FWD DOWN & AFT	---- .12" ---- .11"	.11" ---- .12" ----	0°25' 0°11' ---- ----	---- ---- 0°11' 0°25'
0441139-6	UP & FWD UP & AFT DOWN & FWD DOWN & AFT	---- .24" ---- .22"	.22" ---- .24" ----	0°50' 0°22' ---- ----	---- ---- 0°22' 0°50'

MODEL 182 SERIAL 53007 thru 18253598

SHIM PART NO.	POSITION OF THICKEST CORNER OR EDGE OF SHIM	CORRECTION IMPOSED ON WHEEL			
		TOE-IN	TOE-OUT	POS. CAMBER	NEG. CAMBER
0541157-1	AFT FWD	.06" ----	---- .06"	---- 0°4'	0°4' ----
0541157-2	UP DOWN	.008" ----	---- .008"	0°29' ----	---- 0°29'
0541111-2	UP & FWD UP & AFT DOWN & FWD DOWN & AFT	---- .24" ---- .14"	.14" ---- .24" ----	2°51' 2°25' ---- ----	---- ---- 2°25' 2°51'
0441139-5	UP & FWD UP & AFT DOWN & FWD DOWN & AFT	---- .12" ---- .11"	.11" ---- .12" ----	0°26' 0°10' ---- ----	---- ---- 0°10' 0°26'
0441139-6	UP & FWD UP & AFT DOWN & FWD DOWN & AFT	---- .24" ---- .22"	.22" ---- .24" ----	0°52' 0°20' ---- ----	---- ---- 0°20' 0°52'

Figure 39. Main Landing Gear Installation
(SHEET 2)

FIGURE AND INDEX NO.	PART NUMBER	DESCRIPTION 1 2 3 4 5 6 7	UNITS PER ASSY	USABLE ON CODE
39-				
		ATTACHING PARTS		
- 30	AN6-23A	BOLT	2	K
	AN6-25A	BOLT	2	J
- 31	MS20365-624C	NUT	2	
- 32	AN5-23A	BOLT	2	K
	AN5-25A	BOLT	2	J
- 33	AN960-516L	WASHER	1	
- 34	MS20365-524C	NUT	2	
		---*---		
		SPEED FAIRING INSTALLATION	NP	
	0742410-2	FAIRING ASSEMBLY-MAIN GEAR RH	1	E
	0742410-3	FAIRING ASSEMBLY-MAIN GEAR LH	1	E
	0742410-16	FAIRING ASSEMBLY-MAIN GEAR RH	1	F
	0742410-17	FAIRING ASSEMBLY-MAIN GEAR LH	1	F
		ATTACHING PARTS		
- 35	0441130-1	NUT	1	
- 36	AN6-6A	BOLT	1	
- 37	AN936B616	WASHER	1	
- 38	AN960-616L	WASHER	1	
		---*---		
- 39	0742410-13	SCRAPER	1	
		ATTACHING PARTS		
- 40	AN520-10R10	SCREW	4	
	MS20365-1032C	NUT	4	
		---*---		
- 41	0742410-12	DOUBLER	1	
- 42	0742410-5	FAIRING-LH	1	E
	0742410-4	FAIRING-RH	1	E
	0742410-19	FAIRING-LH	1	F
	0742410-18	FAIRING-RH	1	F
- 43	0441143-23	PLATE ASSEMBLY-GEAR LH	1	E
	0441143-22	PLATE ASSEMBLY-GEAR RH	1	E
	0441143-26	PLATE ASSEMBLY-GEAR RH	1	F
	0441143-27	PLATE ASSEMBLY-GEAR LH	1	F
		ATTACHING PARTS		
- 44	AN520-10R10	SCREW	7	
		---*---		
- 45	NAS686A3	NUTPLATE	7	E
	NAS686A3	NUTPLATE	6	F
- 46		WHEEL & BRAKE ASSEMBLIES-MAIN GEAR SEE FIGURE 129	1	K
		WHEEL & BRAKE ASSEMBLIES-MAIN GEAR TUBELESS TIRE	1	J
		SEE FIGURE 129		
- 47	S-1117-24	NUT-AXLE CESSNA STANDARD	1	
- 48	MS24665-351	PIN-COTTER	1	
- 49	0441141	COVER-BRAKE DISC LH	1	K
	0441141-1	COVER-BRAKE DISC RH	1	K
	0441141-3	COVER-BRAKE DISC LH	1	J
	0441141-4	COVER-BRAKE DISC RH	1	J
- 50	0541157-1	SHIM	AR	
	0541157-2	SHIM	AR	
	0541111-2	SHIM	AR	
	0441139-5	SHIM	AR	
	0441139-6	SHIM	AR	
- 51	0741006	FAIRING	2	C
	0741006-1	FAIRING	2	D
	0741017-1	HUB CAP	2	Q
	0741018-1	HUB CAP	2	W
	1241063-2	HUB CAP	2	X
		ATTACHING PARTS		

CONTINUED ON PAGE 95A

FIGURE AND INDEX NO.	PART NUMBER	DESCRIPTION 1 2 3 4 5 6 7	UNITS PER ASSY	USABLE ON CODE
39- 52	AN515-6R4	SCREW	3	K
	AN515-8R4	SCREW	3	X
- 53	AN936-A6	WASHER	3	K
	AN936-B8	WASHER	3	X
		---*---		

A---182 SERIAL 33000 THRU 33842
B---182 SERIAL 33843 THRU 51556
C---182 SERIAL 33000 THRU 34753
D---182 SERIAL 34754 THRU 51886
E---182 SERIAL 34754 THRU 51193
F---182 SERIAL 51194 & ON
G---182 SERIAL 51557 & ON
H---182 SERIAL 33000 & ON
J---182 SERIAL 51887 & ON
K---182 SERIAL 33000 THRU 51886
N---182 SERIAL 33000 THRU 52358
P---182 SERIAL 52359 & ON
Q---182 SERIAL 51887 THRU 52358
R---182 SERIAL 51557 THRU 52358
S---182 SERIAL 52359 THRU 53007
T---182 SERIAL 18253008 & ON
U---182 SERIAL 51557 THRU 53007
V---182 SERIAL 33000 THRU 51556
W---182 SERIAL 52359 THRU 18253480
X---182 SERIAL 18253481 & ON
Y---182 SERIAL 33843 THRU 53007

NOTE. FOR ACCESSORY KIT LISTINGS REFER TO PAGES 372 THRU 374B

*NOTE. SOME 1961 MODEL AIRCRAFT SERIALS 18253008 & ON WERE EQUIPPED WITH OPTIONAL LONGER LANDING GEAR. SEE ITEMS MARKED *. REFER TO AIRCRAFT EQUIPMENT LIST OR F.A.A. FORM 337 TO DETERMINE IF OPTIONAL LANDING GEAR WAS INSTALLED.

Alighting Gear (Cont)

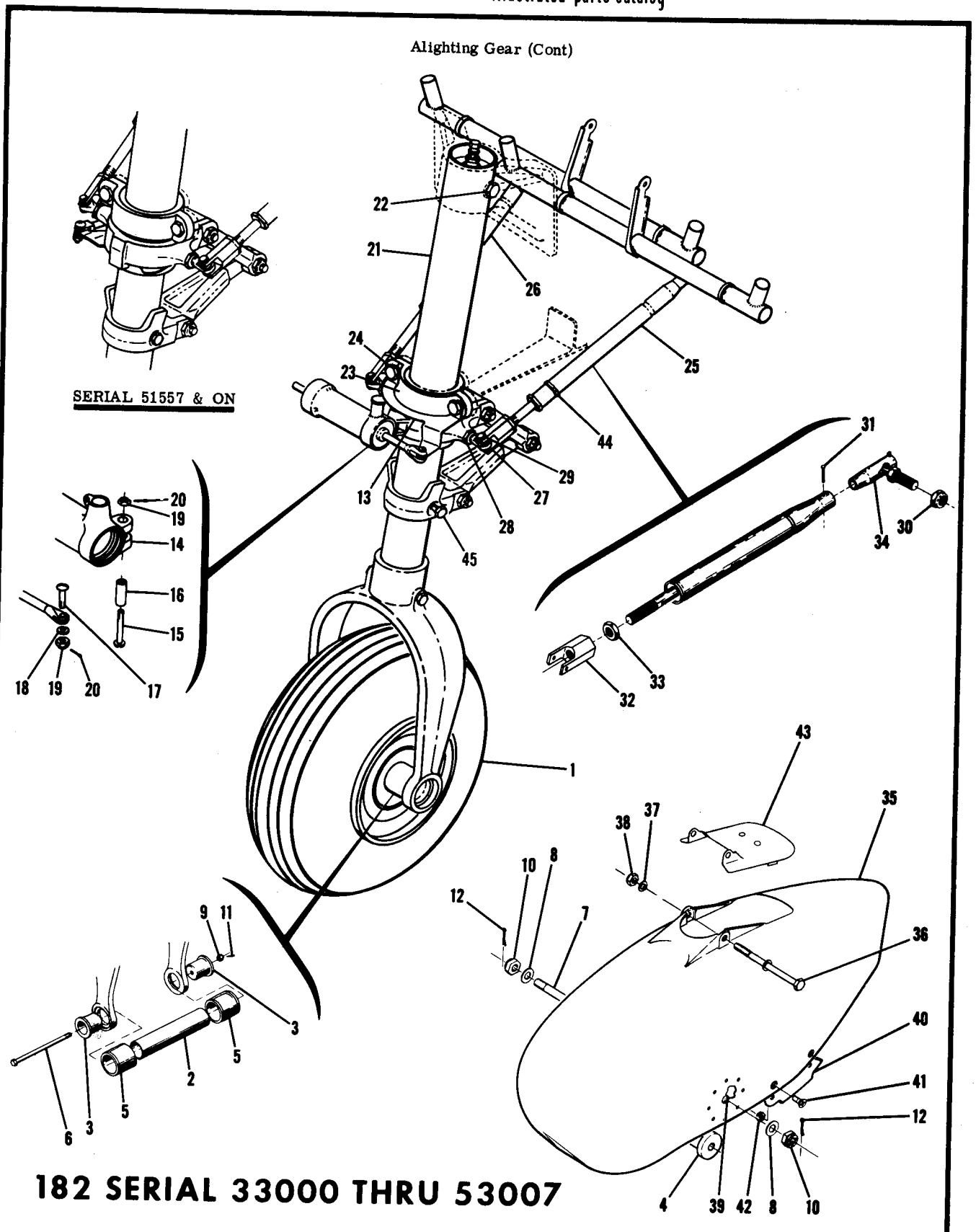

Figure 40. Nose Gear Installation

FIGURE AND INDEX NO.	PART NUMBER		DESCRIPTION 1 2 3 4 5 6 7	UNITS PER ASSY	USABLE ON CODE
40-			NOSE GEAR INSTALLATION	NP	G
- 1			WHEEL ASSEMBLY-NOSE GEAR SEE FIGURE 130	1	H
			WHEEL ASSEMBLY-NOSE GEAR SEE FIGURE 130	1	J
			ATTACHING PARTS		
- 2	0543003		TUBE-AXLE	1	
- 3	0543001		BUCKET-AXLE BOLT	2	
- 4	0742410-8		FERRULE-AXLE BOLT	2	D
- 5	0543002		SPACER-AXLE	2	H
	0543037-1		SPACER-AXLE	2	J
- 6	AN5-47		BOLT	1	
- 7	0742410-15		STUD	1	D
- 8	AN960-516L		WASHER	2	D
- 9	AN310-5		NUT	1	
- 10	AN310-5		NUT	2	D
- 11	MS24665-134		PIN-COTTER	1	
- 12	MS24665-136		PIN-COTTER	2	D
			---*---		
- 13	0543004		ARM-SHIMMY DAMPENER	1	E
- 14			SHIMMY DAMPENER ASSEMBLY SEE FIGURE 131	1	
			ATTACHING PARTS		
- 15	AN23-17		BOLT	1	
- 16	NAS75-3-016		BUSHING	1	E
	NAS75-3-009		BUSHING	1	F
- 17	AN23-12		BOLT	1	
- 18	AN960-10		WASHER	1	
- 19	AN320-3		NUT	2	
- 20	MS24665-132		PIN-COTTER	2	
			---*---		
- 21	0594300-205	*	STRUT ASSEMBLY-NOSE GEAR SEE FIGURE 41	1	A
	0594300-207	*	STRUT ASSEMBLY-NOSE GEAR SEE FIGURE 41	1	B
	0594300-210	*	STRUT ASSEMBLY-NOSE GEAR SEE FIGURE 41	1	C
	0594300-211	*	STRUT ASSEMBLY-NOSE GEAR SEE FIGURE 41	1	F
			ATTACHING PARTS		
- 22	AN5-31A		BOLT	1	
	MS20365-524C		NUT	1	
- 23	0543018-1		CAP	1	
- 24	AN5-11A		BOLT	2	
	AN960-516		WASHER	AR	
	MS20365-524C		NUT	2	
			---*---		
- 25	0743008-1		TUBE ASSEMBLY-NOSE GEAR STEERING LH	1	
- 26	0743008-2		TUBE ASSEMBLY-NOSE GEAR STEERING RH	1	
			ATTACHING PARTS		
- 27	S-1107-3		ROD END BEARING HEC CESSNA STANDARD	2	
- 28	AN316-6R		NUT	2	
- 29	AN3-10A		BOLT	2	
	MS20365-1032C		NUT	2	
- 30	MS20364-624C		NUT	2	
			---*---		
- 31	MS20435M4		RIVET	1	
- 32	0543023		CLEVIS	1	
- 33	AN316-6R		NUT-CHECK	1	
- 34	C-109		BALL JOINT TOK	1	
- 35	0742410-201	#	SPEED FAIRING ASSEMBLY-NOSE GEAR	1	D
	0742410-25	#	SPEED FAIRING ASSEMBLY-NOSE GEAR	1	
			ATTACHING PARTS		
- 36	AN5-34A		BOLT FOR FAIRING WITH 2.90 IN. DIM. BETWEEN MOUNTING FLANGES	1	
	AN5-37A		BOLT FOR FAIRING WITH 3.24 IN. DIM. BETWEEN MOUNTING FLANGES	1	
- 37	AN960-516		WASHER	2	
- 38	MS20365-524C		NUT	1	
			---*---		

CONTINUED ON PAGES 98

182 SERIAL 33000 THRU 53007

FIGURE AND INDEX NO.	PART NUMBER	DESCRIPTION 1 2 3 4 5 6 7	UNITS PER ASSY	USABLE ON CODE
40- 39	0742410-14	DOUBLER	2	
- 40	0742410-9	SCRAPER	1	
		ATTACHING PARTS		
- 41	AN520-10R10	SCREW	4	
- 42	MS20365-1032C	NUT	4	
		---*---		
- 43	0542117-1	COVER PLATE ASSEMBLY-SPEED FAIRING	1	D
		FOR FAIRING WITH 2.90 IN. DIM. BETWEEN MOUNTING FLANGES		
	0743609-10	COVER PLATE ASSEMBLY-SPEED FAIRING	1	
		FOR FAIRING WITH 3.24 IN. DIM. BETWEEN MOUNTING FLANGES		
- 44	NAS397-18-1	CLAMP TIN A3122-18-1	2	
- 45	AN5-43A	BOLT	1	D
	0743009-1	SPACER	2	D
	MS20365-524C	NUT	1	D
		A---182 SERIAL 33000 THRU 33842		
		B---182 SERIAL 33843 THRU 34753		
		C---182 SERIAL 34754 THRU 51556		
		D---182 SERIAL 34754 THRU 53007		
		E---182 SERIAL 33000 THRU 51556		
		F---182 SERIAL 51557 THRU 53007		
		G---182 SERIAL 33000 THRU 53007		
		H---182 SERIAL 33000 THRU 51886		
		J---182 SERIAL 51887 THRU 53007		
		NOTE. FOR ACCESSORY KIT LISTINGS REFER TO PAGES 372 THRU 374B		
		NOTE. *IF AIRCRAFT IS EQUIPPED WITH NOSE WHEEL FAIRING, ALSO ORDER 0742410-25 FAIRING, 0743609-10 COVER AND ONE AN5-37A BOLT IF OLD FAIRING HAS 2.90 IN. DIM. BETWEEN MOUNTING FLANGES.		
		NOTE. #0742410-201 FAIRING IS FOR USE ON AIRPLANES THAT HAVE ORIGINAL NOSE GEAR FORK, FORGING NO. 0543012-497, WHEN ORDERING THIS PART ALSO ORDER SIX AN960D516 WASHER, ONE AN5-37A BOLT AND ONE 0743609-10 COVER.		
		0742410-25 FAIRING IS FOR USE ON AIRPLANES THAT HAVE NOSE GEAR ASSEMBLY EQUIPPED WITH THE REDESIGNED NOSE GEAR FORK. FORGING NO. 0442503-497.		

FIGURE AND INDEX NO.	PART NUMBER		DESCRIPTION 1 2 3 4 5 6 7	UNITS PER ASSY	USABLE ON CODE
40A-			NOSE GEAR INSTALLATION	NP	A
- 1			WHEEL ASSEMBLY-NOSE GEAR SEE FIGURE 130	1	
			ATTACHING PARTS		
- 2	0543003		TUBE-AXLE	1	
- 3	0543001		BUCKET-AXLE BOLT	2	
- 4	0742410-8		FERRULE-AXLE BOLT	2	
- 5	0543037-1		SPACER-AXLE	2	
- 6	AN5-47		BOLT	1	
- 7	0742410-15		STUD	1	
- 8	AN960-516L		WASHER	2	
- 9	AN310-5		NUT	1	
- 10	AN310-5		NUT	2	
- 11	MS24665-134		PIN-COTTER	1	
- 12	MS24665-136		PIN-COTTER	2	
			---*---		
- 13	0543004		ARM-SHIMMY DAMPNER	1	
- 14			SHIMMY DAMPENER ASSEMBLY SEE FIGURE 131	1	
			ATTACHING PARTS		
- 15	AN23-17		BOLT	1	
- 16	NAS75-3-009		BUSHING	1	
- 17	AN23-12		BOLT	1	
- 18	AN960-10		WASHER	1	
- 19	AN320-3		NUT	2	
- 20	MS24665-132		PIN-COTTER	2	
			---*---		
- 21	0743014-204	%	STRUT ASSEMBLY-NOSE GEAR SEE FIGURE 41A	1	A
	0594300-211	%	SHOCK STRUT ASSEMBLY-NOSE GEAR-----SEE FIGURE 41	1	A
			ATTACHING PARTS		
- 22	AN5-31A		BOLT	1	
	MS20365-524C		NUT	1	
- 23	0543018-1		CAP	1	
- 24	AN5-11A		BOLT	2	
	AN960-516		WASHER	AR	
	MS20365-524C		NUT	2	
			---*---		
- 25	0743008-1		TUBE ASSEMBLY-NOSE GEAR STEERING LH	1	
- 26	0743008-2		TUBE ASSEMBLY-NOSE GEAR STEERING RH	1	
			ATTACHING PARTS		
- 27	S-1107-3		ROD END BEARING HEC CESSNA STANDARD	2	
- 28	AN316-6R		NUT	2	
- 29	AN3-10A		BOLT	2	
	MS20365-1032C		NUT	2	
- 30	MS20364-624C		NUT	2	
			---*---		
- 31	MS20435M4		RIVET	1	
- 32	0543023		CLEVIS	1	
- 33	AN316-6R		NUT-CHECK	1	
- 34	C-109		BALL JOINT TOK	1	
- 35	0742410-201	#	SPEED FAIRING ASSEMBLY-NOSE GEAR	1	
	0742410-25	#	SPEED FAIRING ASSEMBLY-NOSE GEAR	1	
			ATTACHING PARTS		
- 36	AN5-47A		BOLT FOR FAIRING WITH 2.90 IN. DIM. BETWEEN MOUNTING FLANGES	1	
	AN5-51A		BOLT FOR FAIRING WITH 3.24 IN. DIM. BETWEEN MOUNTING FLANGES	1	
- 37	AN960-516		WASHER	AR	
- 38	MS20365-524C		NUT	1	
-38A	0743009-1		SPACER	2	
			---*---		

182 SERIAL 18253008 & ON

CONTINUED ON PAGES 98B & 99

Alighting Gear (Cont)

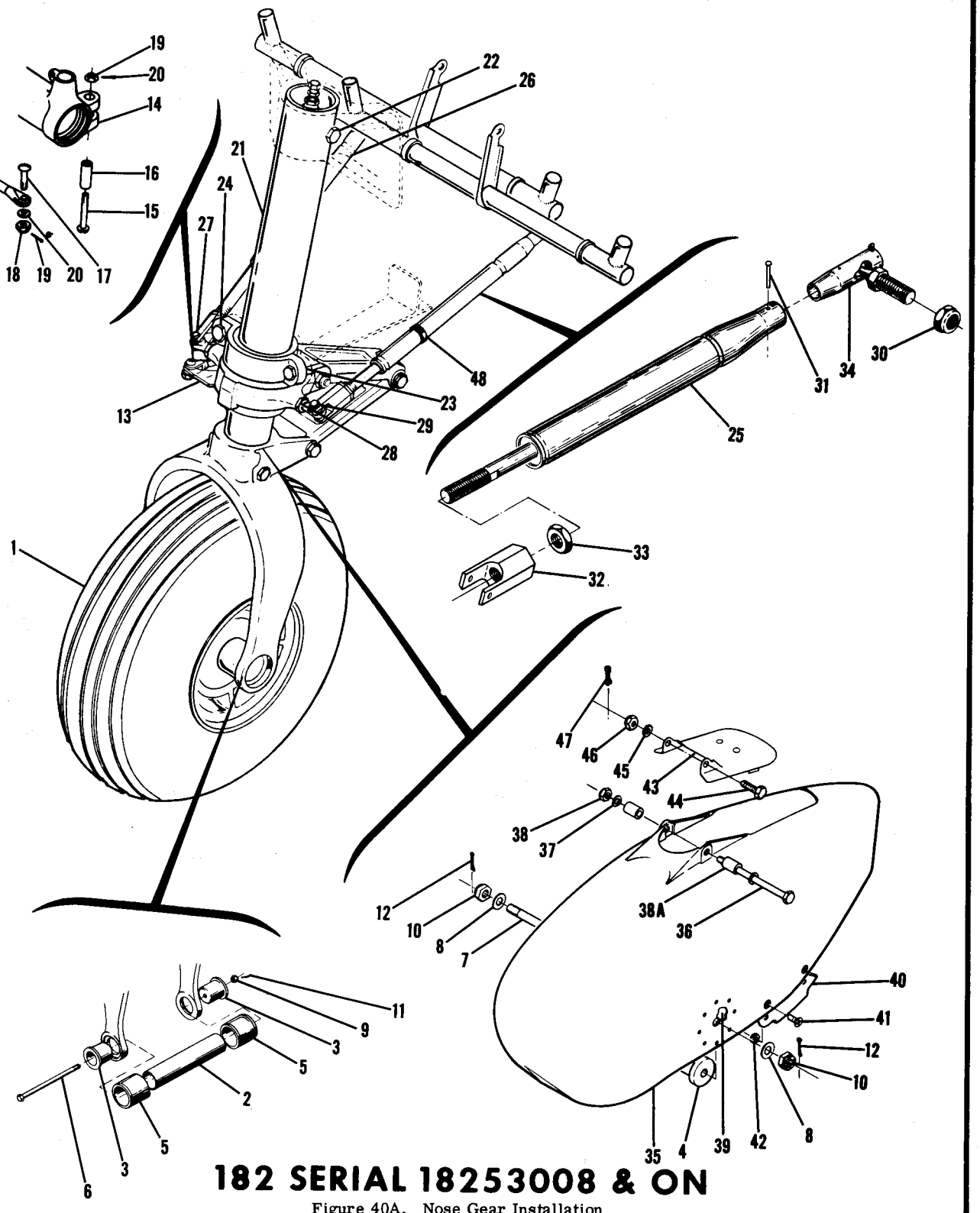

182 SERIAL 18253008 & ON

Figure 40A. Nose Gear Installation

FIGURE AND INDEX NO.	PART NUMBER	DESCRIPTION 1 2 3 4 5 6 7	UNITS PER ASSY	USABLE ON CODE
40A- 39	0742410-14	DOUBLER	2	
- 40	0742410-9	SCRAPER	1	
		ATTACHING PARTS		
- 41	AN520-10R10	SCREW	4	
- 42	MS20365-1032C	NUT	4	
		---*---		
- 43	0542117-5	COVER PLATE ASSEMBLY-SPEED FAIRING	1	
	0542117-1 *	COVER PLATE ASSEMBLY-SPEED FAIRING	1	
		ATTACHING PARTS		
- 44	AN4-32	BOLT	1	
- 45	AN960-416L	WASHER	AR	
- 46	AN310-4	NUT	1	
- 47	MS24665-134	PIN-COTTER	1	
		---*---		
- 48	NAS397-18-1	CLAMP TIN A3122-18-1	2	

A---182 SERIAL 18253008 THRU 18253598

NOTE. FOR ACCESSORY KIT LISTINGS REFER TO PAGES 372 THRU 374B

NOTE. * SOME 1961 MODEL 182 AIRCRAFT SERIALS 18253008 & ON WERE EQUIPPED WITH OPTIONAL LONGER LANDING GEAR. SEE ITEMS MARKED *. REFER TO AIRCRAFT EQUIPMENT LIST OR F.A.A. FORM 337 TO DETERMINE IF OPTIONAL LANDING GEAR WAS INSTALLED.

NOTE. %IF AIRCRAFT IS EQUIPPED WITH NOSE WHEEL FAIRING, ALSO ORDER 0742410-25 FAIRING, AND ONE AN5-51A BOLT, IF OLD FAIRING HAS 2.90 IN. DIM. BETWEEN MOUNTING FLANGES.

NOTE. #0742410-201 FAIRING IS FOR USE ON AIRPLANES THAT HAVE ORIGINAL NOSE GEAR FORK, FORGINGS NO. 1243004-497 OR 0543012-497. WHEN ORDERING THIS PART ALSO ORDER SIX AN960D516 WASHER AND ONE AN5-51A BOLT.

0742410-25 FAIRING IS FOR USE ON AIRPLANES THAT HAVE BEEN EQUIPPED WITH THE REDESIGNED TYPE NOSE GEAR FORK, FORGINGS NO. 0543043-498 OR 0442503-497.

Alighting Gear (Cont)

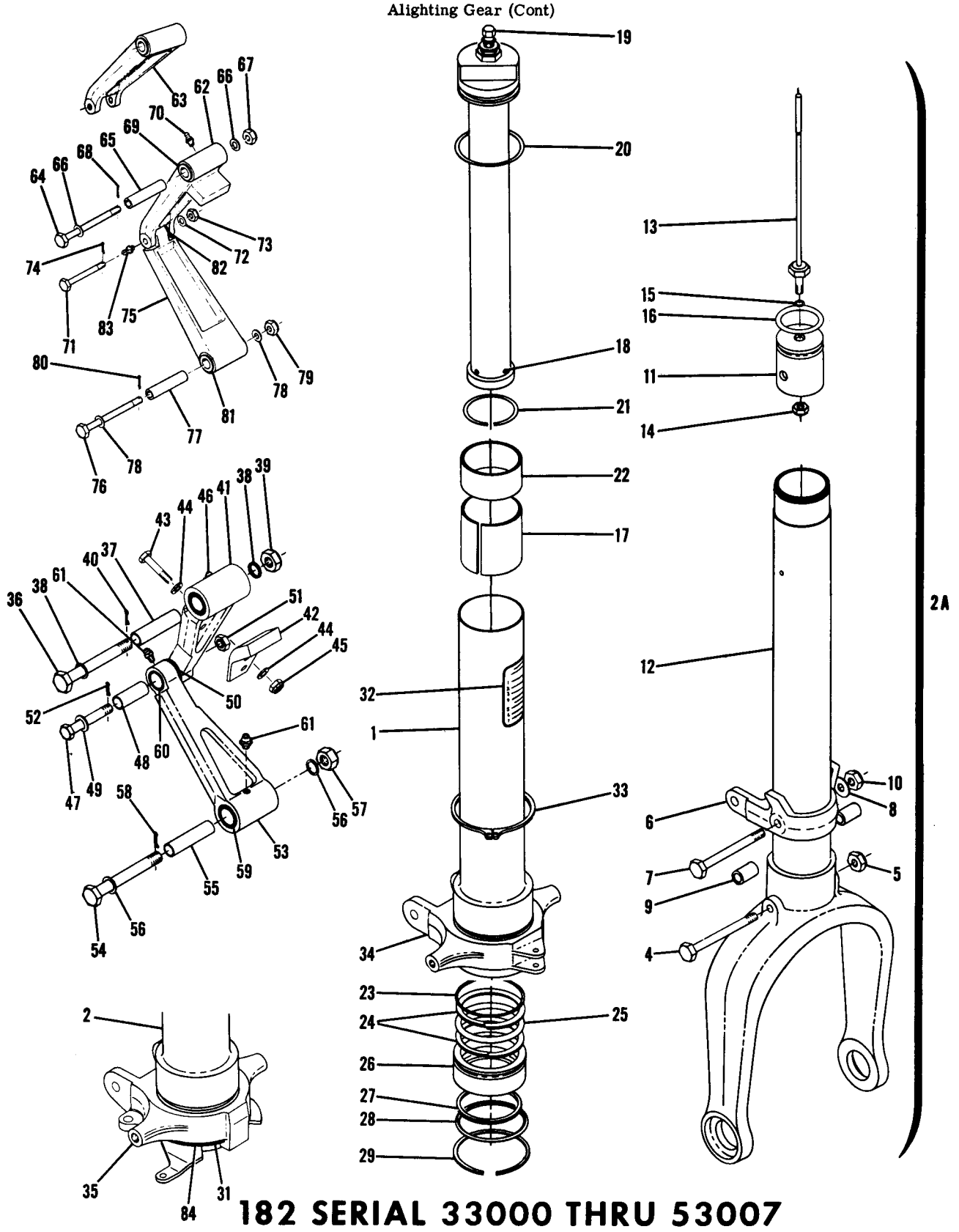

182 SERIAL 33000 THRU 53007

Figure 41. Nose Gear Strut Assembly

FIGURE AND INDEX NO.	PART NUMBER		DESCRIPTION 1 2 3 4 5 6 7	UNITS PER ASSY	USABLE ON CODE
41-			SHOCK STRUT ASSEMBLY-NOSE GEAR	NP	A
	0594300-205	#	SHOCK STRUT ASSEMBLY-NOSE GEAR --- 182 SERIAL	1	B
	0594300-207	#	SHOCK STRUT ASSEMBLY-NOSE GEAR --- 33000 THRU	1	C
	0594300-210	#	SHOCK STRUT ASSEMBLY-NOSE GEAR	1	G
	0594300-211	#	SHOCK STRUT ASSEMBLY-NOSE GEAR --- 53007	1	H
- 1	0543008		TUBE-SHOCK STRUT	1	J
- 2	0543008-2		TUBE-SHOCK STRUT	1	H
- 2A	0594300-206	#	SHOCK STRUT ASSEMBLY-LOWER	1	B
	0543000-212	#	SHOCK STRUT ASSEMBLY-LOWER	1	C
	0594300-209	#	SHOCK STRUT ASSEMBLY-LOWER	1	D
- 3	SK182-34	#	FORK-NOSE GEAR-----REPLACEMENT KIT	1	
- 4	AN5-30A		BOLT-----FOR USE WITH ORIGINAL FORK	1	
	AN5-33A		BOLT-----FOR USE WITH REDESIGNED FORK	1	
- 5	MS20365-524C		NUT	1	
- 6			FITTING	NP	
			ATTACHING PARTS		
- 7	AN5-27A		BOLT	1	
	AN5-43A		BOLT	1	D
- 8	AN960-516		WASHER	2	D
- 9	0743009-1		SPACER	2	D
- 10	MS20365-524C		NUT	1	
			---*---		
- 11	0841200-7		PLUG-PIN BASE	1	
- 12			TUBE-INNER	NP	
- 13	0841200-21		METERING PIN	1	
			ATTACHING PARTS		
- 14	MS20365-428C		NUT	1	
			---*---		
- 15	AN6227B5		O RING	1	
- 16	AN6227B26		O RING	1	
- 17	1243012-4		SPACER-EXTENDED STOP	1	
	0543000-6		ORIFICE-PISTON SUPPORT ASSEMBLY	1	
- 18	AN503-6-8		SCREW	4	
- 19	AN6287-1		VALVE ASSEMBLY	1	K
	47A1562		O RING	1	
	AN6227B4		O RING	1	
	0543036-1		VALVE ASSEMBLY	1	L
	AN901-5A		GASKET	1	L
- 20	AN623D3		O RING	1	
- 21	0841200-19		LOCK RING	1	
- 22	0841200-18		BEARING	1	
- 23	AN623D6		O RING	1	
- 24	MS28782-32		RING-BACK-UP	2	
- 25	AN6227B32		O RING	1	
- 26	0841200-14		RING-PACK SUPPORT	1	
- 27	S11065-21		SCRAPER SHWS	1	
- 28	0841200-15		RING-PACK RETAINER	1	
- 29	0841200-25		LOCK RING	1	
- 30			DELETED, NEVER USED		
- 31	0543029		WASHER	1	
- 32	0543032		PLACARD	1	
- 33	NAS670-275		RING-RETAINING	1	
- 34	0543011-5		ARM ASSEMBLY-STEERING	1	J
- 35	0743011-1		ARM ASSEMBLY-STEERING	1	H
	0841000-98		LINK ASSEMBLY-LANDING GEAR TORQUE UPPER	1	A
			ATTACHING PARTS		
- 36	AN6-31		BOLT	1	
- 37	0841000-84		SPACER	2	
- 38	AN960-616L		WASHER	4	
- 39	AN310-6		NUT	2	
- 40	MS24665-285		PIN-COTTER	2	
			---*---		
- 41	0841005-6		LINK-LANDING GEAR TORQUE UPPER	1	
- 42	0543033-1		LUG-WHEEL CENTERING	1	
			ATTACHING PARTS		
- 43	AN4-11A		BOLT	2	
- 44	AN960-416		WASHER	4	
- 45	MS20365-428C		NUT	2	
			---*---		

CONTINUED ON PAGE 102

FIGURE AND INDEX NO.	PART NUMBER	DESCRIPTION 1 2 3 4 5 6 7	UNITS PER ASSY	USABLE ON CODE
41- 46	AN944-101A	FITTING-LUBRICATOR	2	
- 47	AN175-16	BOLT	1	A
- 48	0841000-83	SPACER	1	A
- 49	0841000-70	WASHER	2	A
- 50	AN960-716L	WASHER	2	A
	AN960-516L	WASHER	AR	A
- 51	AN310-5	NUT	1	A
- 52	MS24665-134	PIN-COTTER	1	A
- 53	0841000-64	LINK ASSEMBLY-LANDING GEAR TORQUE LOWER	1	A
		ATTACHING PARTS		
- 54	AN6-31	BOLT	1	
- 55	0841000-84	SPACER	2	
- 56	AN960-616L	WASHER	4	
- 57	AN310-6	NUT	2	
- 58	MS24665-285	PIN-COTTER	2	
		---*---		
- 59	NAS77-8-88	BUSHING	2	
- 60	0841000-63	BUSHING	1	
- 61	AN944-101A	FITTING-LUBRICATOR	2	
- 62	0543035-1	LINK ASSEMBLY-LANDING GEAR TORQUE UPPER	1	E
- 63	0543035-3	LINK ASSEMBLY-LANDING GEAR TORQUE UPPER	1	D
		ATTACHING PARTS		
- 64	AN4-31	BOLT	1	F
- 65	0543000-9	SPACER	1	F
- 66	AN960-416L	WASHER	AR	F
- 67	AN310-4	NUT	1	F
- 68	MS24665-134	PIN-COTTER	1	F
		---*---		
- 69	NAS77-6-88	BUSHING	2	
- 70	AN944-101A	FITTING-LUBRICATOR	1	
- 71	NAS464-3-22	BOLT	1	F
- 72	AN960-10L	WASHER	1	F
- 73	AN310-3	NUT	1	F
- 74	MS24665-132	PIN-COTTER	1	F
- 75	0543035-2	LINK ASSEMBLY-LANDING GEAR TORQUE LOWER	1	F
		ATTACHING PARTS		
- 76	AN4-31	BOLT	1	
- 77	0543000-9	SPACER	1	
- 78	AN960-416L	WASHER	AR	
- 79	AN310-4	NUT	1	
- 80	MS24665-134	PIN-COTTER	1	
		---*---		
- 81	NAS77-6-88	BUSHING	2	
- 82	NAS77-3-23	BUSHING	2	
- 83	AN944-101A	FITTING-LUBRICATOR	2	
- 84	1243030-1	SHIM-STEERING ARM .005	AR	
	1243030-2	SHIM-STEERING ARM .010	AR	
	1243030-3	SHIM-STEERING ARM .020	AR	

A---182 SERIAL 33000 THRU 33842
WHEN REPLACING COMPLETE ASSEMBLY ORDER 0594300-205#
B---182 SERIAL 33000 THRU 33842
C---182 SERIAL 33843 THRU 34753
D---182 SERIAL 34754 THRU 53007
E---182 SERIAL 33000 THRU 34753
F---182 SERIAL 33000 THRU 53007
G---182 SERIAL 34754 THRU 51556
H---182 SERIAL 51557 THRU 53007 & NOTE * ON FIGURE 41A IS APPLICABLE
J---182 SERIAL 33000 THRU 51556
K---182 SERIAL 33000 THRU 51646
L---182 SERIAL 51647 THRU 53007

NOTE. #IF AIRCRAFT IS EQUIPPED WITH NOSE WHEEL FAIRING, ALSO ORDER 0742410-25 FAIRING, SIX AN960D516 WASHER, ONE 0743609-10 COVER & ONE AN5-37A BOLT IF OLD FAIRING HAS 2.90 IN. DIM. BETWEEN MOUNTING FLANGES

FIGURE AND INDEX NO.	PART NUMBER	DESCRIPTION 1 2 3 4 5 6 7	UNITS PER ASSY	USABLE ON CODE
41A-	0743014-204 #	SHOCK STRUT ASSEMBLY-NOSE GEAR	1	A
	0594300-211 * #	SHOCK STRUT ASSEMBLY-NOSE GEAR SEE FIGURE 41 FOR BREAKDOWN	1	
- 1	0543008-2	TUBE-SHOCK STRUT	1	
- 2	0543039-201 #	FORK & BARREL ASSEMBLY	1	
	SK175-9 #	FORK-NOSE GEAR-----REPLACEMENT KIT	1	
- 3	AN5-30A	BOLT-----FOR USE WITH ORIGINAL FORK	1	
	AN5-33A	BOLT-----FOR USE WITH REDESIGNED FORK	1	
- 4	MS20365-524C	NUT	1	
- 5	0841200-7	PLUG-PIN BASE	1	
- 6	0841200-21	METERING PIN **182 SERIAL**	1	
		ATTACHING PARTS	1	
- 7	MS20365-428C	NUT **18253008 & ON**	1	
		---*---		
- 8	AN6227B5	O RING	1	
- 9	AN6227B26	O RING	1	
- 10	1243012-4	SPACER-EXTEND STOP	1	
- 11	0543000-6	ORIFICE-PISTON SUPPORT ASSEMBLY	1	
	AN503-6-8	SCREW	1	
- 12	0543036-1	VALVE ASSEMBLY	4	
	AN901-5A	GASKET	1	
- 13	AN6230B3	O RING	1	
- 14	0841200-19	LOCK RING	1	
- 15	0841200-18	BEARING	1	
- 16	AN6230B6	O RING	1	
- 17	MS28782-32	RING-BACK-UP	1	
- 18	S11065-21	SCRAPER SHWS	2	
- 19	0841200-15	RING-PACK RETAINER	1	
- 20	0841200-25	LOCK RING	1	
- 21	AN6227B32	O RING	1	
- 22	0841200-42	RING-PACK SUPPORT	1	
- 23	0543029	WASHER	1	
- 24	0543032	PLACARD	1	
- 25	NAS670-275	RING-RETAINING	1	
- 26	0743011-1	ARM ASSEMBLY-STEERING	1	
- 27	0543035-3	LINK ASSEMBLY-TORQUE UPPER	1	
		ATTACHING PARTS		
- 28	AN4-31	BOLT	1	
- 29	0543000-9	SPACER	1	
- 30	AN960-416L	WASHER	AR	
- 31	AN310-4	NUT	1	
- 32	MS24665-134	PIN-COTTER	1	
		---*---		
- 33	NAS77-6-88	BUSHING	2	
- 34	AN944-101A	FITTING-LUBRICATOR	1	
- 35	NAS464-3-22	BOLT	1	
- 36	AN960-10L	WASHER	1	
- 37	AN310-3	NUT	1	
- 38	MS24665-132	PIN-COTTER	1	
- 39	0543035-2	LINK ASSEMBLY-TORQUE LOWER	1	
		ATTACHING PARTS		
- 40	AN4-31	BOLT	1	
- 41	0543000-9	SPACER	1	
- 42	AN960-416L	WASHER	AR	
- 43	AN310-4	NUT	1	
- 44	MS24665-134	PIN-COTTER	1	
		---*---		
- 45	NAS77-6-88	BUSHING	2	
- 46	NAS77-3-23	BUSHING	2	
- 47	AN944-101A	FITTING-LUBRICATOR	2	
- 48	1243030-1	SHIM-STEERING ARM .005	AR	
	1243030-2	SHIM-STEERING ARM .010	AR	
	1243030-3	SHIM-STEERING ARM .020	AR	

A---182 SERIAL 18253008 THRU 18253598

NOTE. * SOME 1961 MODEL 182 AIRCRAFT SERIALS 18253008 THRU 18253598 WERE EQUIPPED WITH OPTIONAL LONGER LANDING GEAR. SEE ITEMS MARKED *. REFER TO AIRCRAFT EQUIPMENT LIST OR F.A.A. FORM 337 TO DETERMINE IF OPTIONAL LANDING GEAR WAS INSTALLED. WHEN CONVERTING TO LONGER GEAR ALSO ORDER 0542117-1 COVER PLATE.

NOTE. #IF AIRCRAFT IS EQUIPPED WITH NOSE WHEEL FAIRING ALSO ORDER 0742410-25 FAIRING, SIX AN960D516 WASHER, & ONE AN5-51A BOLT IF OLD FAIRING HAS 2.90 IN. DIM. BETWEEN MOUNTING FLANGES

Alighting Gear (Cont)

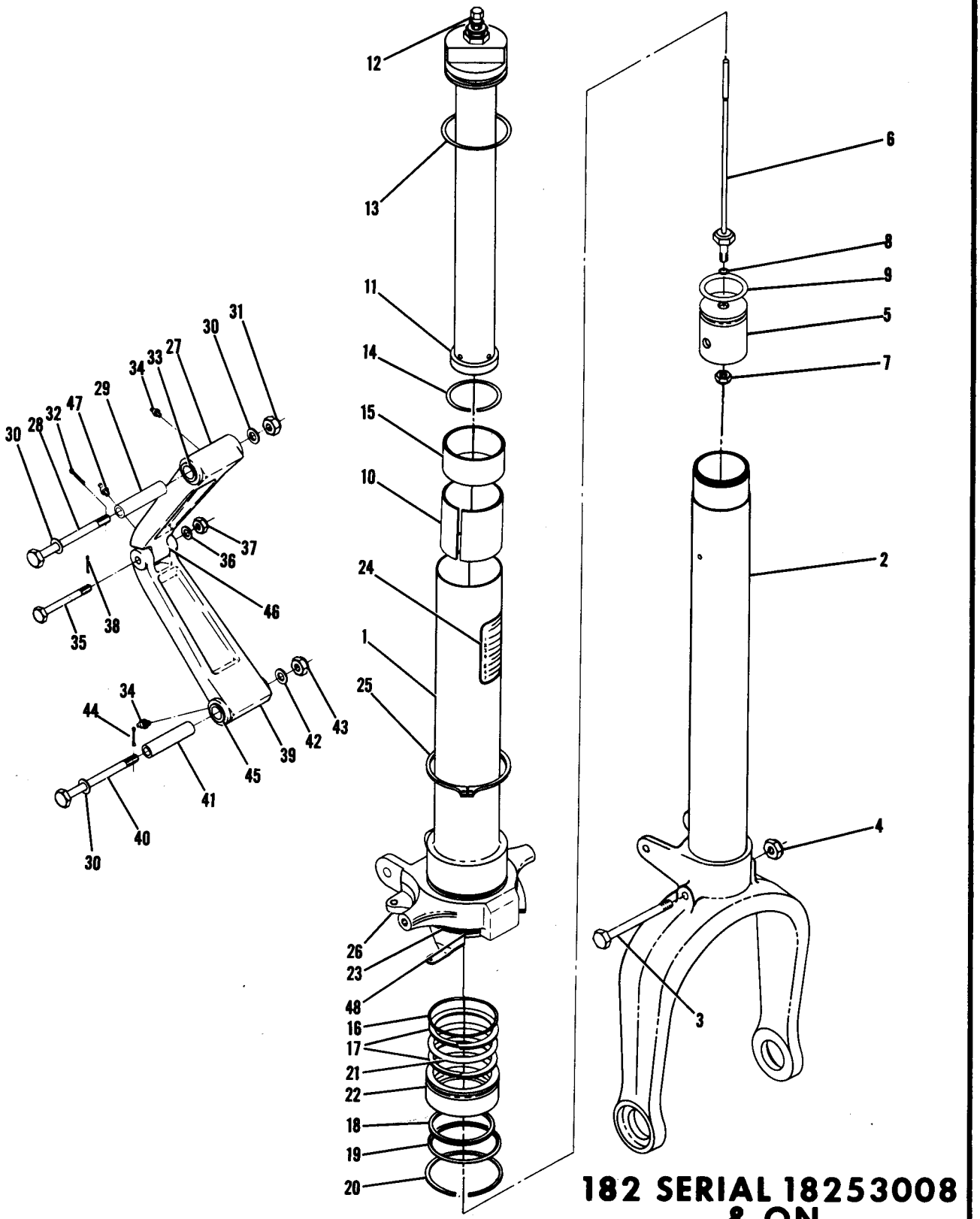

182 SERIAL 18253008 & ON

Figure 41A. Nose Gear Shock Strut Assembly

Alighting Gear (Cont)

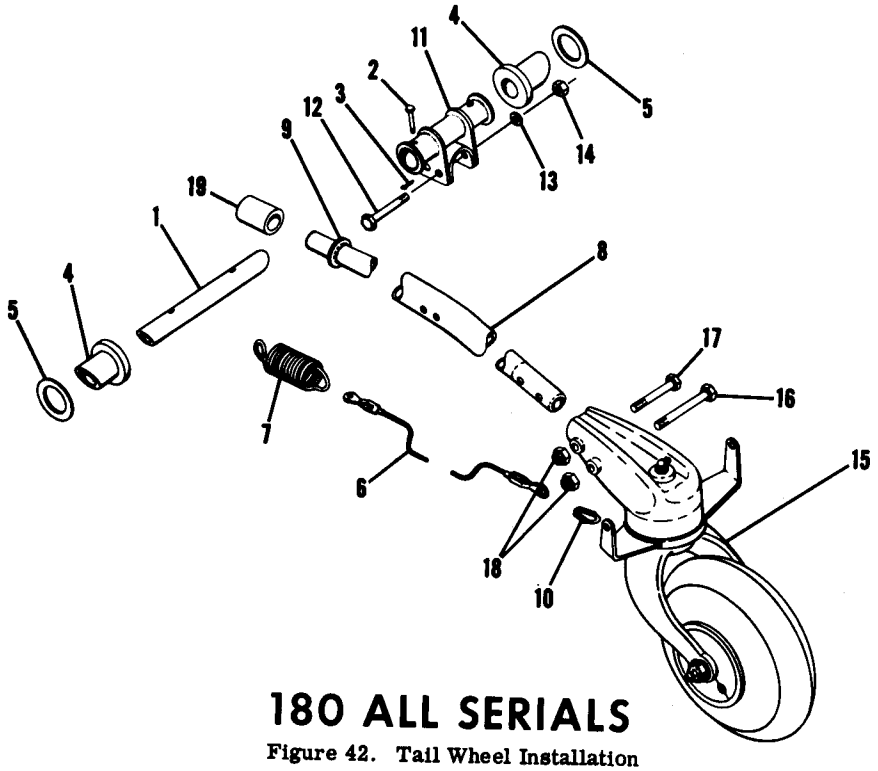

180 ALL SERIALS

Figure 42. Tail Wheel Installation

FIGURE AND INDEX NO.	PART NUMBER	DESCRIPTION 1 2 3 4 5 6 7	UNITS PER ASSY	USABLE ON CODE
42-		TAILWHEEL INSTALLATION	NP	A
- 1	0742100-5	TUBE-TAILWHEEL SPRING MOUNTING	1	
		ATTACHING PARTS		
- 2	MS20392-1-33	PIN-CLEVIS	2	
- 3	MS24665-130	PIN-COTTER	2	
		---*---		
- 4	0742112	BUSHING	2	
- 5	0742100-6	WASHER	AR	
	0712304-7	FITTING-TAILWHEEL STEERING---- SEE FIGURE 104	2	B
- 6	0510105-153	CABLE ASSEMBLY SEE FIGURE 105	2	C
	0510105-123	CABLE ASSEMBLY	2	B
- 7	0742200-5	SPRING-----SEE FIGURE 105	2	
	0742100-9	DELETED, NOT AVAILABLE		
- 8	0742100-4	SUB ASSEMBLY-SPRING	1	
- 9	0742100-8	SPRING	1	
- 10	0742200-6	RETAINER-HOSE	1	
- 11	0742102	LINK	2	
		FITTING-SPRING	1	
- 12	AN5-21A	ATTACHING PARTS		
- 13	AN960-516	BOLT	2	
- 14	MS20365-524C	WASHER	2	
		NUT	2	
- 15	0742400	---*---		
		TAILWHEEL ASSEMBLY SEE FIGURE 133	1	
- 16	AN5-26A	ATTACHING PARTS		
- 17	AN5-21A	BOLT	1	
- 18	MS20365-524C	BOLT	1	
		NUT	2	
- 19	S-51-12	---*---		
		HOSE-1.75 IN. LG. BULK ITEM REF S-51-12-7 ---- CESSNA STANDARD	1	

A---180 SERIAL 30000 & ON
B---180 SERIAL 30000 THRU 32150
C---180 SERIAL 32151 & ON

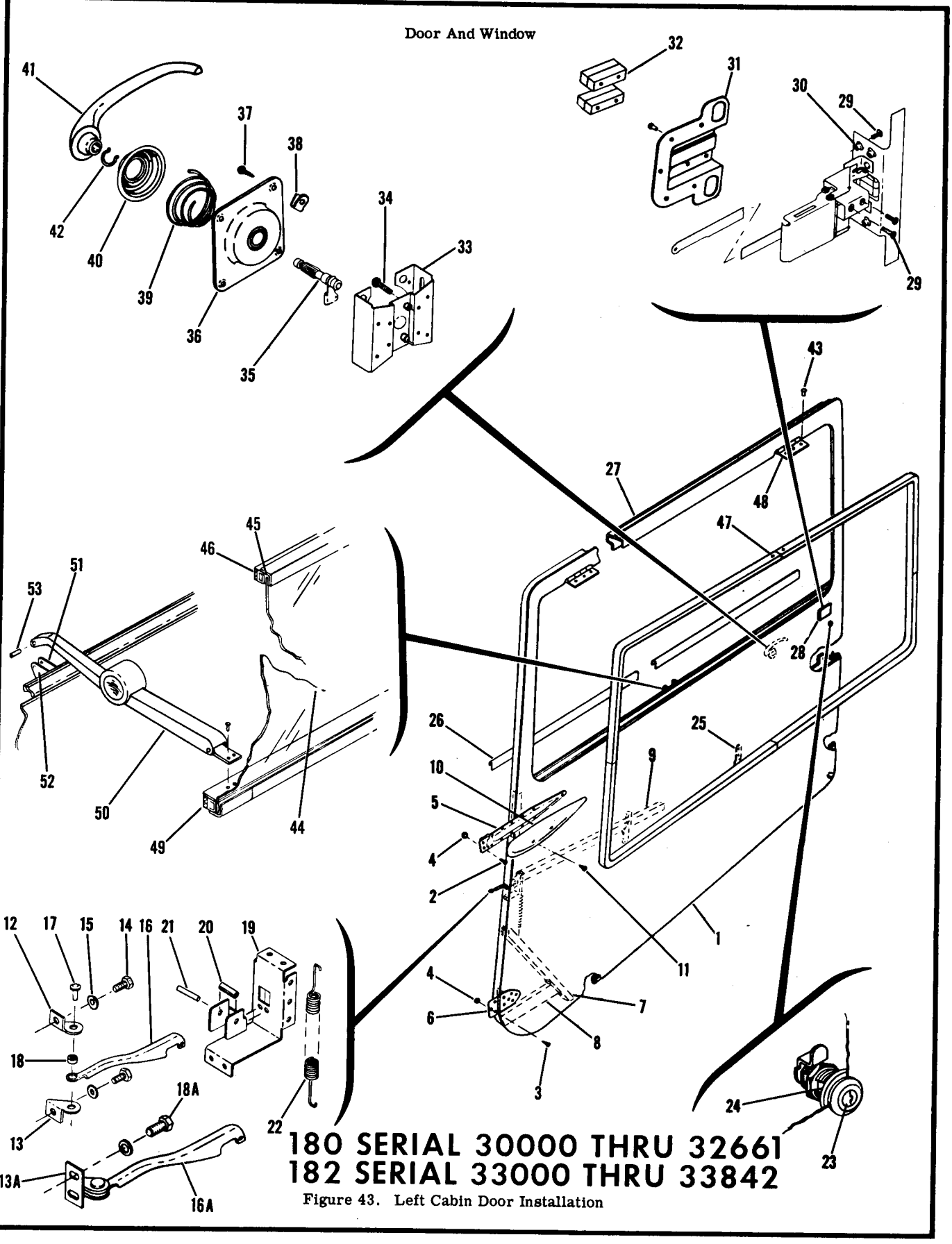

Figure 43. Left Cabin Door Installation

FIGURE AND INDEX NO.	PART NUMBER		DESCRIPTION 1 2 3 4 5 6 7	UNITS PER ASSY	USABLE ON CODE
43-			CABIN DOOR INSTALLATION-LH	NP	A
- 1	0711001-67		STRUCTURE ASSEMBLY-CABIN DOOR LH	1	
			ATTACHING PARTS		
- 2	AN507-1032R8		SCREW	3	
- 3	AN520-10R12		SCREW	3	
- 4	MS20365-1032C		NUT	6	
			---*---		
- 5	0711001-49		HINGE ASSEMBLY-UPPER	1	
- 6	0411579-5		HINGE ASSEMBLY-LOWER	1	
- 7	0711001-45		STIFFENER-LOWER	1	
- 8	0711001-43		BRACKET ASSEMBLY-LOWER HINGE REINFORCEMENT	1	
- 9	0711001-25		STIFFENER-LH DOOR	1	
- 10	0711001-21		FAIRING-DOOR UPPER HINGE	1	
			ATTACHING PARTS		
- 11	S-1021Z-6-6		SCREW CESSNA STANDARD	2	B
	S-1023Z-6-6		SCREW CESSNA STANDARD	2	C
			---*---		
- 12		*	DELETED, NOT PROCURABLE		
- 13		*	DELETED, NOT PROCURABLE		
-13A	0711039-1	*	HINGE-DOOR STOP	1	
			ATTACHING PARTS		
- 14	AN3-3A		BOLT	2	
- 15	AN960-10L		WASHER	2	
			---*---		
- 16		*	DELETED, NOT PROCURABLE		
-16A	0711040-3	*	STOP-LH DOOR	1	
			ATTACHING PARTS		
- 17		*	DELETED, NOT PROCURABLE		
- 18		*	DELETED, NOT PROCURABLE		
-18A	MS20450C12	*	RIVET	1	
			---*---		
- 19	0711001-35		BRACKET ASSEMBLY-DOOR STOP	1	
- 20	0711001-52		SPACER	1	
- 21	NAS561-3-18		ROLL PIN EN	1	
- 22	0711001-29		SPRING-DOORSTOP	1	
- 23	0413323-1		LOCK ASSEMBLY-DOOR	1	
- 24	0411851		WASHER-DOOR LOCK	1	
- 25	0511463-1		CLIP-DOOR PANEL	2	
			ATTACHING PARTS		
	S-1021Z-4-4		SCREW CESSNA STANDARD	4	
			---*---		
- 26	0511106-38		CHANNEL-UPHOLSTERY RETAINER	2	
- 27	S-1079-1-144		WEATHER STRIP-CABIN DOOR---- CESSNA STANDARD	1	
- 28	0511112-16		LATCH ASSEMBLY-CABIN DOOR SEE FIGURE 47	1	
			ATTACHING PARTS		
- 29	AN520-10R6		SCREW	8	
- 30	S10K75		RIVNUT GD	4	
			---*---		
- 31	0411576		PAN-DOOR LATCH	1	
- 32	0411886		SPACER-DOOR LATCH PAN	1	
- 33	0511106-137		BRACKET-INNER DOOR HANDLE	1	
			ATTACHING PARTS		
- 34	AN520-10R12		SCREW	1	
			---*---		
- 35	0511227		SHAFT-LH DOOR HANDLE	1	
- 36	0413195-3		PLATE ASSEMBLY-DOOR HANDLE	1	
			ATTACHING PARTS		
- 37	S-1022Z-6-6		SCREW CESSNA STANDARD	4	
- 38	NAS396-1		NUT TIN A 1932-6Z	4	
			---*---		
- 39	0413317-1		SPRING-DOOR HANDLE	1	
- 40	0511189-2		ESCUTCHEON-DOOR HANDLE	1	
- 41	0511189		HANDLE-DOOR	1	

CONTINUED ON PAGE 106

180 SERIAL 30000 THRU 32661
182 SERIAL 33000 THRU 33842

FIGURE AND INDEX NO.	PART NUMBER	DESCRIPTION 1 2 3 4 5 6 7	UNITS PER ASSY	USABLE ON CODE
43- 42	0511189-1	CLIP-DOOR HANDLE RETAINING	1	
	0711050-11	WINDOW ASSEMBLY-DOOR LH	1	
		ATTACHING PARTS		
- 43	CR163-4-4	RIVET CY	8	
		---*---		
- 44	0711051-1	GLASS ASSEMBLY-WINDOW	1	
- 45	S-1082-1	SEAL-83.75 IN. LG BULK ITEM REF S-1082-1-83.75	1	
- 46	0711050-13	FRAME ASSEMBLY-WINDOW	1	
		ATTACHING PARTS		
- 47	CR163-4-4	RIVET CY	6	
		---*---		
- 48	0411185-7	HINGE ASSEMBLY-WINDOW	2	
- 49	S-1152-1	SEAL-84.00 IN. LG. BULK ITEM REF S-1152-1-84	1	
		CESSNA STANDARD		
- 50	0413362-3	LATCH ASSEMBLY-WINDOW	1	
- 51	0413366	BRACKET-WINDOW LATCH	1	
- 52	0413366-1	BRACKET-WINDOW LATCH	1	
- 53	0413148	PIN-WINDOW LATCH	1	
		A---180 SERIAL 30000 THRU 32661		
		182 SERIAL 33000 THRU 33842		
		B---180 SERIAL 30000 THRU 32661		
		C---182 SERIAL 33000 THRU 33842		
		*NOTE.WHEN REPLACING DOOR STOP & OR DOOR STOP		
		HINGE FOR AIRCRAFT PRIOR TO 180 SERIAL		
		50356 & 182 SERIAL 51557 ORDER SK182-14		

FIGURE AND INDEX NO.	PART NUMBER	DESCRIPTION 1 2 3 4 5 6 7	UNITS PER ASSY	USABLE ON CODE
44-		CABIN DOOR INSTALLATION-LH ---------- 180 SERIAL ---	NP	A
- 1	0711023-1	STRUCTURE ASSEMBLY-CABIN DOOR LH - 180 SERIAL ---	1	B
	0711023-51	STRUCTURE ASSEMBLY-CABIN DOOR LH 32662 & ON --	1	C
	0711023-57	STRUCTURE ASSEMBLY-CABIN DOOR LH 32662 & ON --	1	V
	0711023-55	STRUCTURE ASSEMBLY-CABIN DOOR LH - 182 SERIAL ---	1	E
	0711023-59	STRUCTURE ASSEMBLY-CABIN DOOR LH - 182 SERIAL ---	1	X
	0711023-61	STRUCTURE ASSEMBLY-CABIN DOOR LH 33843 & ON --	1	AB
	0711023-69	STRUCTURE ASSEMBLY-CABIN DOOR LH 33843 & ON --	1	Y
	0711023-73	STRUCTURE ASSEMBLY-CABIN DOOR LH ----------	1	AA
		ATTACHING PARTS		
- 2		DELETED, NEVER USED ----------		
- 3	AN507-1032R8	SCREW ----------	6	G
	AN507-1032R12	SCREW ----------	8	D
- 4	AN520-10R12	SCREW ----------	6	G
- 5	MS20365-1032C	NUT ----------	6	
		---*---		
- 6	0711001-49	HINGE ASSEMBLY-UPPER ----------	1	G
	0711037-1	HINGE-UPPER LH REAR----------	1	D
	0711037-5	HINGE-UPPER LH FORWARD ----------	1	D
		ATTACHING PARTS		
	0711038-1	PIN-HINGE----------	1	
		---*---		
- 7	0411579-5	HINGE ASSEMBLY-LOWER ----------	1	G
	0711037-3	HINGE-LOWER LH REAR----------	1	D
	0711037-10	HINGE-LOWER LH FORWARD ----------	1	D
		ATTACHING PARTS		
	0711038-1	PIN-HINGE----------	1	
		---*---		
- 8	0711001-25	STIFFENER-DOOR UPPER ----------	1	
- 9	0711001-45	STIFFENER-DOOR LOWER ----------	1	
- 10	0711001-43	BRACKET-LOWER HINGE REINFORCEMENT----------	1	
- 11	0711040-1	STOP ASSEMBLY-DOOR ----------	1	
		ATTACHING PARTS		
- 12	AN3-3A	BOLT----------	2	
- 13	AN960-10L	WASHER ----------	2	
		---*---		
-13A	0711039-1	HINGE ASSEMBLY-LH----------	1	
-13B	MS20450C12	RIVET ----------	1	
- 14	0711001-35	BRACKET ASSEMBLY-DOOR STOP ----------	1	
- 15	0711001-52	SPACER ----------	1	
- 16	NAS561-3-18	ROLL PIN EN ----------		
- 17	0711001-29	SPRING-DOOR STOP ----------	1	
- 18	0511463-1	CLIP-DOOR PANEL ----------	2	
		ATTACHING PARTS		
	S-1021Z-4-4	SCREW CESSNA STANDARD ----------	4	
		---*---		
- 19	0711023-14	CHANNEL-UPHOLSTERY RETAINER ----------	1	AC
- 20	0711023-15	CHANNEL-UPHOLSTERY RETAINER ----------	1	AC
- 21	S-363	SEAL-144.0 IN. LONG-----BULK ITEM-----REF S-363-144 ---- CESSNA STANDARD	1	
- 22	0711020-1	LATCH ASSEMBLY-DOOR LH SEE FIGURE 48 ----------	1	B
	0711020-7	LATCH ASSEMBLY-DOOR LH SEE FIGURE 48 ----------	1	T
	0711020-11	LATCH ASSEMBLY-DOOR LH SEE FIGURE 48 ----------	1	U
	0711061-1	LATCH ASSEMBLY-DOOR LH SEE FIGURE 48A ----------	1	W
		ATTACHING PARTS		
	AN970-3	WASHER ----------	3	Z
	AN520-10R6	SCREW ----------	3	Z
	NAS220-5	SCREW ----------	12	W
		---*---		
	0711034-1	STOP-DOOR LATCH ----------	1	K
- 23	0711028-1	BRACKET-INNER DOOR HANDLE ----------	1	Z
		ATTACHING PARTS		
- 24	AN520-10R12	SCREW ----------	2	
		---*---		
- 25	0711029-1	SHAFT-DOOR HANDLE LH ----------	1	Z
- 26	0413195-4	PLATE ASSEMBLY-DOOR HANDLE ----------	1	Z
		ATTACHING PARTS		
- 27	AN936-B10	WASHER ----------	4	
- 28	AN520-10R6	SCREW ----------	4	
		---*---		
- 29	0413323-2	LOCK ASSEMBLY-DOOR ----------	1	L
	0413323-5	LOCK ASSEMBLY-DOOR ----------	1	M
		ATTACHING PARTS		
- 30	0411851	WASHER ----------	1	Z
	0411857	WASHER ----------	1	W
		---*---		
		CONTINUED ON PAGE 108 & 109		

Door & Window (Cont)

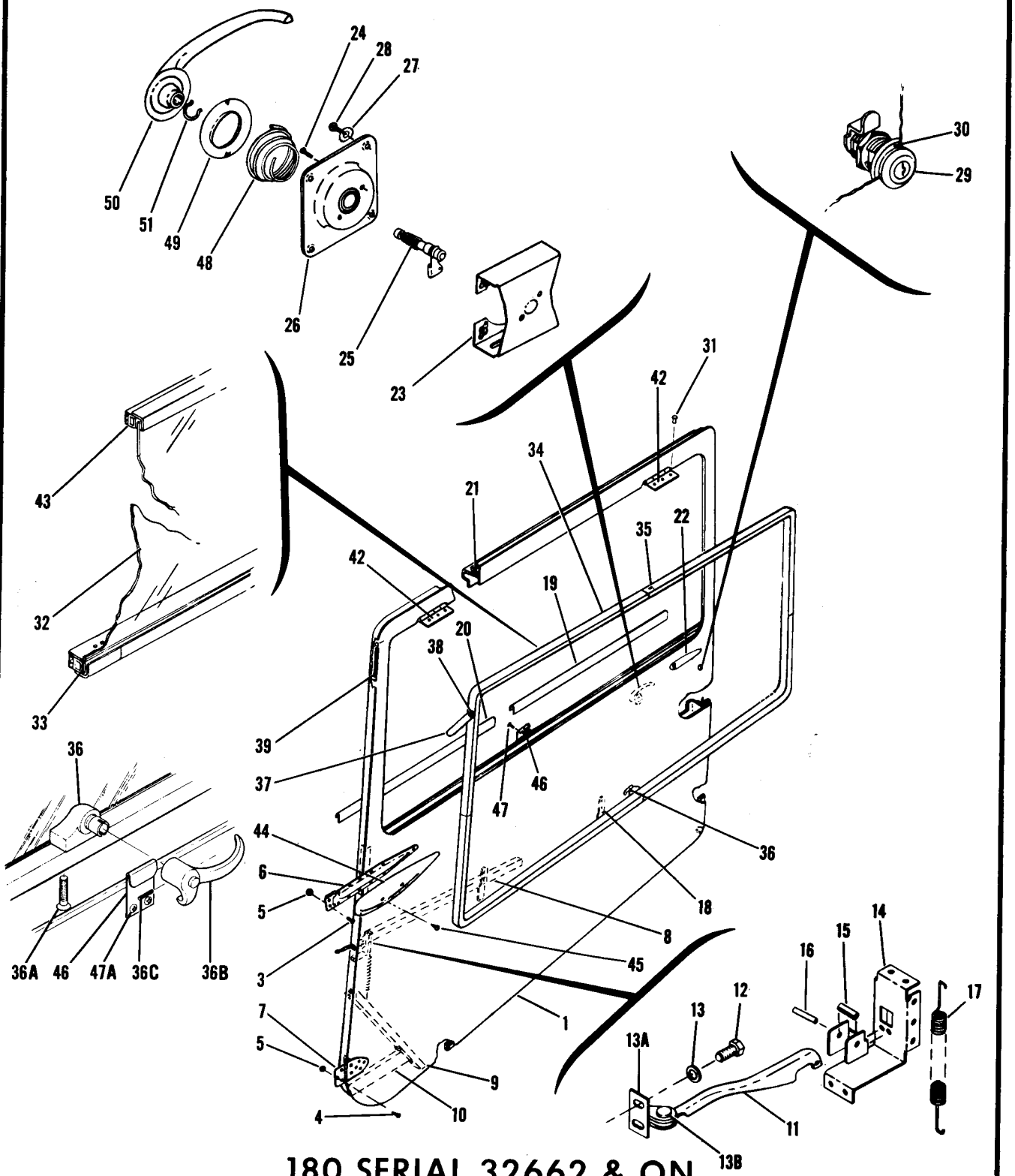

180 SERIAL 32662 & ON
182 SERIAL 33843 & ON

Figure 44. Left Cabin Door Installation

FIGURE AND INDEX NO.	PART NUMBER	DESCRIPTION 1 2 3 4 5 6 7	UNITS PER ASSY	USABLE ON CODE
44-	0711050-19	WINDOW ASSEMBLY-DOOR LH	1	
	0711050-3	WINDOW ASSEMBLY-DOOR LH	1	0
		ATTACHING PARTS		
- 31	CR163-4-4	RIVET CY	8	
		---*---		
- 32	0711051-1	GLASS ASSEMBLY-WINDOW	1	
	0711051-2	GLASS ASSEMBLY-WINDOW ----TINTED	1	0
- 33	S-1082-1	SEAL-WINDOW BULK ITEM 83.75 IN. LONG	1	
		REF S-1082-1-83.75 CESSNA STANDARD		
- 34	0711050-5	FRAME-WINDOW	1	
		ATTACHING PARTS		
- 35	CR163C-4-4	RIVET CY	6	
		---*---		
- 36	0711050-200	BRACKET ASSEMBLY-WINDOW LATCH	1	
		ATTACHING PARTS		
-36A	NAS514P1032-14	SCREW	2	
	NAS43-3-34	SPACER	2	
		---*---		
-36B	0811725-40	HANDLE ASSEMBLY	1	
		ATTACHING PARTS		
-36C	NAS561P3-7	PIN-ROLL	1	
		---*---		
- 37	0711021-4	ARM ASSEMBLY-WINDOW	1	
		ATTACHING PARTS		
- 38	AN525-10R8	SCREW	1	
		---*---		
- 39	0711021-9	SPRING-WINDOW ARM	1	
		ATTACHING PARTS		
- 40		DELETED, NOT USED		
		---*---		
- 41		DELETED, NOT USED		
- 42	0411185-7	HINGE ASSEMBLY-WINDOW	2	

CONTINUED ON PAGE 109A

FIGURE AND INDEX NO.	PART NUMBER	DESCRIPTION 1 2 3 4 5 6 7	UNITS PER ASSY	USABLE ON CODE
44- 43	S-1152-1	SEAL-84.00 IN. LG. BULK ITEM REF S-1152-1-84 ----	1	
- 44	0711001-21	FAIRING-DOOR UPPER HINGE ----------	1	G
		ATTACHING PARTS		
- 45	S-1023Z-6-6	SCREW CESSNA STANDARD ----------	2	
		---*---		
- 46	0511241-1	PLATE-WINDOW LATCH ----------	1	A
	0711026-1	PLATE-WINDOW LATCH ----------	1	O
		ATTACHING PARTS		
- 47	S-1021Z-8-8	SCREW CESSNA STANDARD ----------	2	O
-47A	AN515-6R5	SCREW ----------	2	A
		---*---		
- 48	0413317-1	SPRING-DOOR HANDLE ----------	1	
- 49	0511189-2	ESCUTCHEON-DOOR HANDLE ----------	1	
- 50	0511303-1	HANDLE-DOOR INSIDE ----------	1	G
	0711027-1	HANDLE-DOOR INSIDE ----------	1	D
- 51	0511189-1	CLIP-DOOR HANDLE RETAINING----------	1	

A---180 SERIAL 32662 & ON
182 SERIAL 33843 & ON
B---180 SERIAL 32662 THRU 50105
182 SERIAL 33843 THRU 34753
C---180 SERIAL 50106 THRU 50355
182 SERIAL 34754 THRU 51556
D---180 SERIAL 50356 & ON
182 SERIAL 51557 & ON
E---182 SKYLANE SERIAL 34754 THRU 51556
F---182 SKYLANE SERIAL 51557 & ON
G---180 SERIAL 32662 THRU 50355
182 SERIAL 33843 THRU 51556
K---180 SERIAL 50106 & ON
182 SERIAL 34754 & ON
L---180 SERIAL 32662 & ON
182 SERIAL 33843 THRU 34753
M---182 SERIAL 34754 & ON
O---182 SKYLANE SERIAL 34754 & ON
S---182 SKYLANE SERIAL 18253066 & ON
T---180 SERIAL 50106 THRU 50766
182 SERIAL 34754 THRU 52722
U---180 SERIAL 50767 THRU 50911
182 SERIAL 52723 THRU 53007
V---180 SERIAL 50356 THRU 50911
182 SERIAL 51557 THRU 53007
W---180 SERIAL 18050912 & ON
182 SERIAL 18253008 & ON
X---182 SKYLANE SERIAL 51557 THRU 53007
Y---182 SKYLANE 18253008 & ON
Z---180 SERIAL 32662 THRU 50911
182 SERIAL 33843 THRU 53007
AA---182 SERIAL 18253008 & ON
AB---180 SERIAL 18050912 & ON
AC---180 SERIAL 32662 & ON
182 SERIAL 33843 THRU 53007
S-PART NOS APPEARING ON THIS PAGE ARE CESSNA STANDARD

This page intentionally left blank.

Door And Window (Cont)

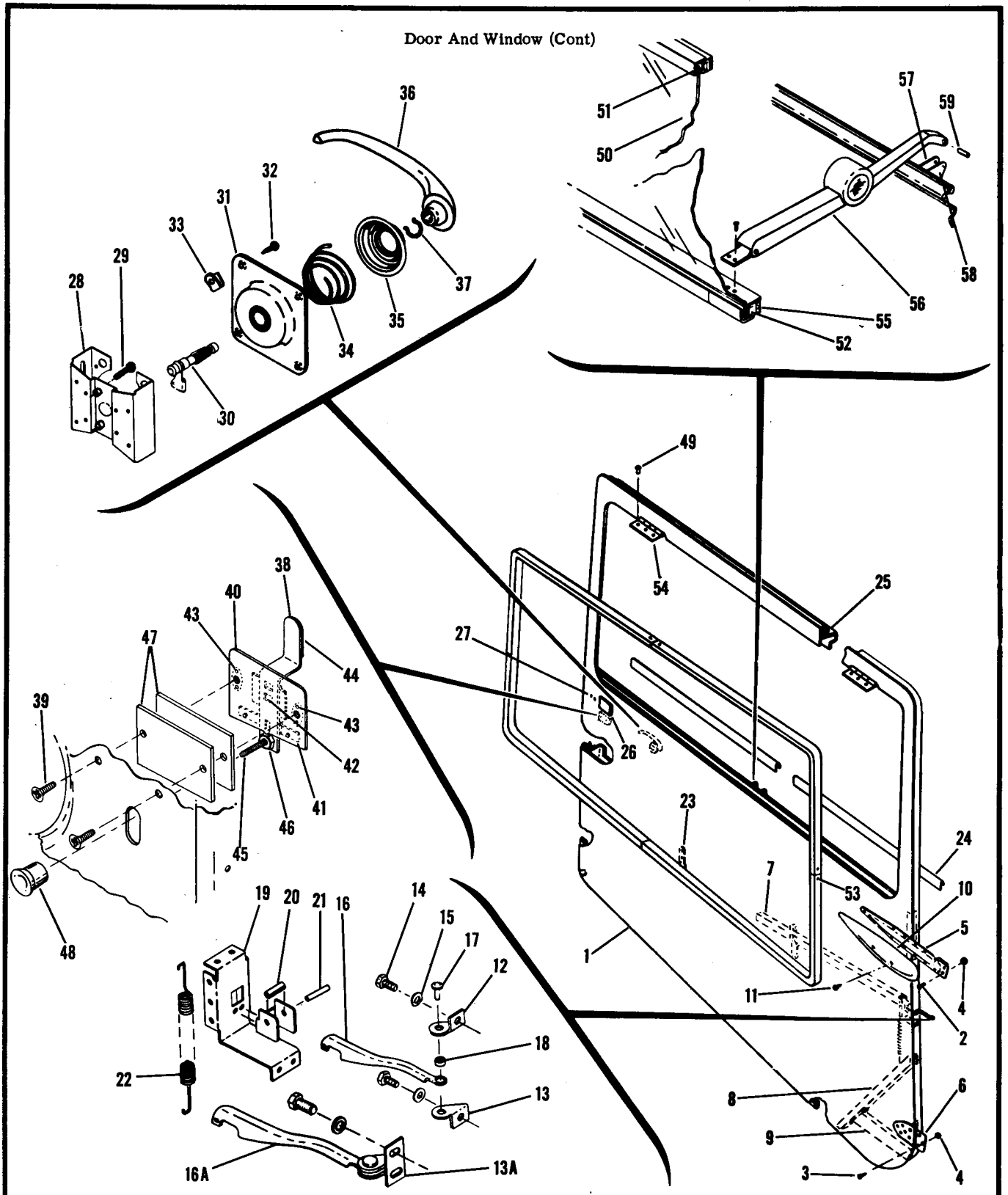

180 SERIAL 30000 THRU 32661
182 SERIAL 33000 THRU 33842

Figure 45. Right Cabin Door Installation

FIGURE AND INDEX NO.	PART NUMBER		1 2 3 4 5 6 7 DESCRIPTION	UNITS PER ASSY	USABLE ON CODE
45-			CABIN DOOR INSTALLATION-RH		
- 1	0711001-68		STRUCTURE ASSEMBLY-CABIN DOOR RH	NP 1	A
			ATTACHING PARTS		
- 2	AN507-1032R8		SCREW	3	
- 3	AN520-10R12		SCREW	3	
- 4	MS20365-10R12		NUT CESSNA STANDARD	6	
			---*---		
- 5	0711001-48		HINGE ASSEMBLY-UPPER	1	
- 6	0411579-5		HINGE ASSEMBLY-LOWER	1	
- 7	0711001-26		STIFFENER-DOOR UPPER	1	
- 8	0711001-44		STIFFENER-DOOR LOWER	1	
- 9	0711001-42		BRACKET-LOWER HINGE REINFORCEMENT	1	
- 10	0711001-21		FAIRING-DOOR UPPER HINGE	1	
			ATTACHING PARTS		
- 11	S-1021Z-6-6		SCREW CESSNA STANDARD	2	B
	S-1023Z-6-6		SCREW CESSNA STANDARD	2	C
			---*---		
- 12		*	DELETED, NOT PROCURABLE		
- 13		*	DELETED, NOT PROCURABLE		
-13A	0711039-2	*	HINGE-DOOR STOP	1	
			ATTACHING PARTS		
- 14	AN3-3A		BOLT	2	
- 15	AN960-10L		WASHER	2	
			---*---		
- 16		*	DELETED, NOT PROCURABLE		
-16A	0711040-4	*	STOP-RH DOOR	1	
			ATTACHING PARTS		
- 17		*	DELETED, NOT PROCURABLE		
- 18		*	DELETED, NOT PROCURABLE		
-18A	MS20450C12	*	RIVET	1	
			---*---		
- 19	0711001-36		BRACKET ASSEMBLY-DOOR STOP	1	
- 20	0711001-52		SPACER	1	
- 21	NAS561-3-18		ROLL PIN EN	1	
- 22	0711001-29		SPRING-DOOR STOP	1	
- 23	0511463-1		CLIP-DOOR PANEL	2	
			ATTACHING PARTS		
	S-1021Z-4-4		SCREW CESSNA STANDARD	4	
			---*---		
- 24	0511106-38		CHANNEL-UPHOLSTERY RETAINER	2	
- 25	S-1079-1-144		WEATHER STRIP-CABIN DOOR---- CESSNA STANDARD	1	
- 26	0511112-16		LATCH ASSEMBLY-CABIN DOOR SEE FIGURE 47	1	
			ATTACHING PARTS		
- 27	AN520-10R6		SCREW	8	
	S10K75		RIVNUT GD	4	
			---*---		
	0411576		PAN-DOOR LATCH	1	
	0411886		SPACER-DOOR LATCH PAN	1	
- 28	0511106-137		BRACKET-INNER DOOR HANDLE	1	
			ATTACHING PARTS		
- 29	AN520-10R12		SCREW	1	
			---*---		
- 30	0711029-2		SHAFT-DOOR HANDLE RH	1	
- 31	0413195-3		PLATE ASSEMBLY-DOOR HANDLE	1	
			ATTACHING PARTS		
- 32	S-1022Z-6-6		SCREW CESSNA STANDARD	4	
- 33	NAS396-1		NUT TIN A1932-6Z	4	
			---*---		
- 34	0413317-1		SPRING-DOOR HANDLE	1	
- 35	0511189-2		ESCUTCHEON-DOOR HANDLE	1	
- 36	0511189		HANDLE-DOOR	1	
- 37	0511189-1		CLIP-DOOR HANDLE RETAINING	1	

CONTINUED ON PAGE 112

180 SERIAL 30000 THRU 32661
182 SERIAL 33000 THRU 33842

FIGURE AND INDEX NO.	PART NUMBER	DESCRIPTION 1 2 3 4 5 6 7	UNITS PER ASSY	USABLE ON CODE
45- 38	0411590-1	LATCH ASSEMBLY-THUMB	1	
		ATTACHING PARTS		
- 39	S-1021Z-8-8	SCREW CESSNA STANDARD	2	
		---*---		
- 40	0411665	HOUSING-THUMBLATCH	1	
- 41	0411590-3	BRACKET-THUMBLATCH	1	
- 42	0411591	SPRING-THUMBLATCH	1	
- 43	NAS444-4	NUT TIN A6191-8Z-3	2	
- 44	0411592-1	BOLT-DOORLATCH	1	
- 45	AN515-8R12	SCREW	1	
- 46	MS20364-832C	NUT	1	
- 47	0511106-109	DOUBLER-THUMBLATCH	2	
- 48	0411092-1	KNOB-THUMB LATCH	1	
	0711050-12	WINDOW ASSEMBLY-DOOR RH	1	
		ATTACHING PARTS		
- 49	CR163-4-4	RIVET CY	8	
		---*---		
- 50	0711051-2	GLASS ASSEMBLY-WINDOW	1	
- 51	S-1082-1	SEAL-83.75 IN. LG BULK ITEM REF S-1082-1-83.75	1	
- 52	0711050-14	FRAME ASSEMBLY-WINDOW	1	
		ATTACHING PARTS		
- 53	CR163-4-4	RIVET CY	6	
		---*---		
- 54	0411185-7	HINGE ASSEMBLY-WINDOW	2	
- 55	S-1152-1	SEAL-84.0 IN. LG. BULK ITEM REF S-1152-1-84.00	1	
- 56	0413362-3	LATCH ASSEMBLY-WINDOW	1	
- 57	0413366	BRACKET-WINDOW LATCH	1	
- 58	0413366-1	BRACKET-WINDOW LATCH	1	
- 59	0413148	PIN-WINDOW LATCH	1	

A---180 SERIAL 30000 THRU 32661
182 SERIAL 33000 THRU 33842
B---180 SERIAL 30000 THRU 32661
C---182 SERIAL 33000 THRU 33842
*NOTE.WHEN REPLACING DOOR STOP & OR DOOR STOP HINGE FOR AIRCRAFT PRIOR TO 180 SERIAL 50356 & 182 SERIAL 51557 ORDER SK182-14
S-PART NOS APPEARING ON THIS PAGE ARE CESSNA STANDARD

FIGURE AND INDEX NO.	PART NUMBER	DESCRIPTION 1 2 3 4 5 6 7	UNITS PER ASSY	USABLE ON CODE
46-		CABIN DOOR INSTALLATION-RH	NP	A
- 1	0711023-2	STRUCTURE ASSEMBLY-CABIN DOOR RH -- 180 SERIAL --	1	B
	0711023-52	STRUCTURE ASSEMBLY-CABIN DOOR RH	1	C
	0711023-58	STRUCTURE ASSEMBLY-CABIN DOOR RH 32662 & ON	1	Q
	0711023-56	STRUCTURE ASSEMBLY-CABIN DOOR RH	1	E
	0711023-60	STRUCTURE ASSEMBLY-CABIN DOOR RH	1	F
	0711023-62	STRUCTURE ASSEMBLY-CABIN DOOR RH	1	R
		ATTACHING PARTS		
- 2		DELETED, NEVER USED --------- 182 SERIAL ------		
- 3	AN507-1032R8	SCREW	6	G
	AN507-1032R12	SCREW ---------- 33843 THRU 53007	8	D
- 4	AN520-10R12	SCREW	6	G
- 5	MS20365-1032C	NUT	6	
		---*---		
- 6	0711001-48	HINGE ASSEMBLY-UPPER	1	G
	0711037-2	HINGE-UPPER RH REAR	1	D
	0711037-6	HINGE-UPPER RH FORWARD	1	D
		ATTACHING PARTS		
	0711038-1	PIN-HINGE	1	
		---*---		
- 7	0411579-5	HINGE ASSEMBLY-LOWER	1	G
	0711037-4	HINGE-LOWER RH REAR	1	D
	0711037-8	HINGE-LOWER RH FORWARD	1	D
		ATTACHING PARTS		
	0711038-1	PIN-HINGE	1	
		---*---		
- 8	0711001-26	STIFFENER-DOOR UPPER	1	
- 9	0711001-44	STIFFENER-DOOR LOWER	1	T
- 10	0711001-42	BRACKET-LOWER HINGE REINFORCEMENT	1	T
- 11	0711040-2	STOP ASSEMBLY-DOOR	1	
		ATTACHING PARTS		
- 12	AN3-3A	BOLT	2	
- 13	AN960-10L	WASHER	2	
		---*---		
- 14	0711001-36	BRACKET ASSEMBLY-DOOR STOP	1	
- 15	0711001-52	SPACER	1	
- 16	NAS561-3-18	ROLLPIN-----EN	1	
- 17	0711001-29	SPRING-DOOR STOP	1	
- 18	0511463-1	CLIP-DOOR PANEL	2	
		ATTACHING PARTS		
	S-1021Z-4-4	SCREW CESSNA STANDARD	4	
		---*---		
- 19	0711023-14	CHANNEL-UPHOLSTERY RETAINER	1	
- 20	0711023-15	CHANNEL-UPHOLSTERY RETAINER	1	
- 21	S-363	SEAL-144.0 IN LONG BULK ITEM REF S-363-144	1	
		CESSNA STANDARD		
- 22	0711020-2	LATCH ASSEMBLY-DOOR RH SEE FIGURE 47	1	I
	0711020-12	LATCH ASSEMBLY-DOOR RH SEE FIGURE 48	1	U
	0711061-2	LATCH ASSEMBLY-DOOR RH SEE FIGURE 48A	1	R
		ATTACHING PARTS		
	AN970-3	WASHER	3	T
	AN520-10R6	SCREW	3	T
	NAS220-5	SCREW	12	R
		---*---		
	0711034-1	STOP-LATCH	1	J
- 23	0711028-2	BRACKET-INNER DOOR HANDLE	1	T
		ATTACHING PARTS		
- 24	AN520-10R12	SCREW	2	
		---*---		
- 25	0711029-2	SHAFT-DOOR HANDLE RH	1	T
- 26	0413195-4	PLATE ASSEMBLY-DOOR HANDLE	1	T
		ATTACHING PARTS		
- 27	AN936B10	WASHER	4	
- 28	AN520-10R6	SCREW	4	
		---*---		
	0711050-20	WINDOW ASSEMBLY-DOOR RH	1	
	0711022-16	WINDOW ASSEMBLY-DOOR RH ----TINTED WHEN EXHAUSTED USE 0711050-4	1	L
	0711050-4	WINDOW ASSEMBLY-DOOR RH ----TINTED	1	L
		ATTACHING PARTS		
- 29	CR163C-4-4	RIVET CY	6	
		---*---		

CONTINUED ON PAGES 114 & 115

Door And Window (Cont)

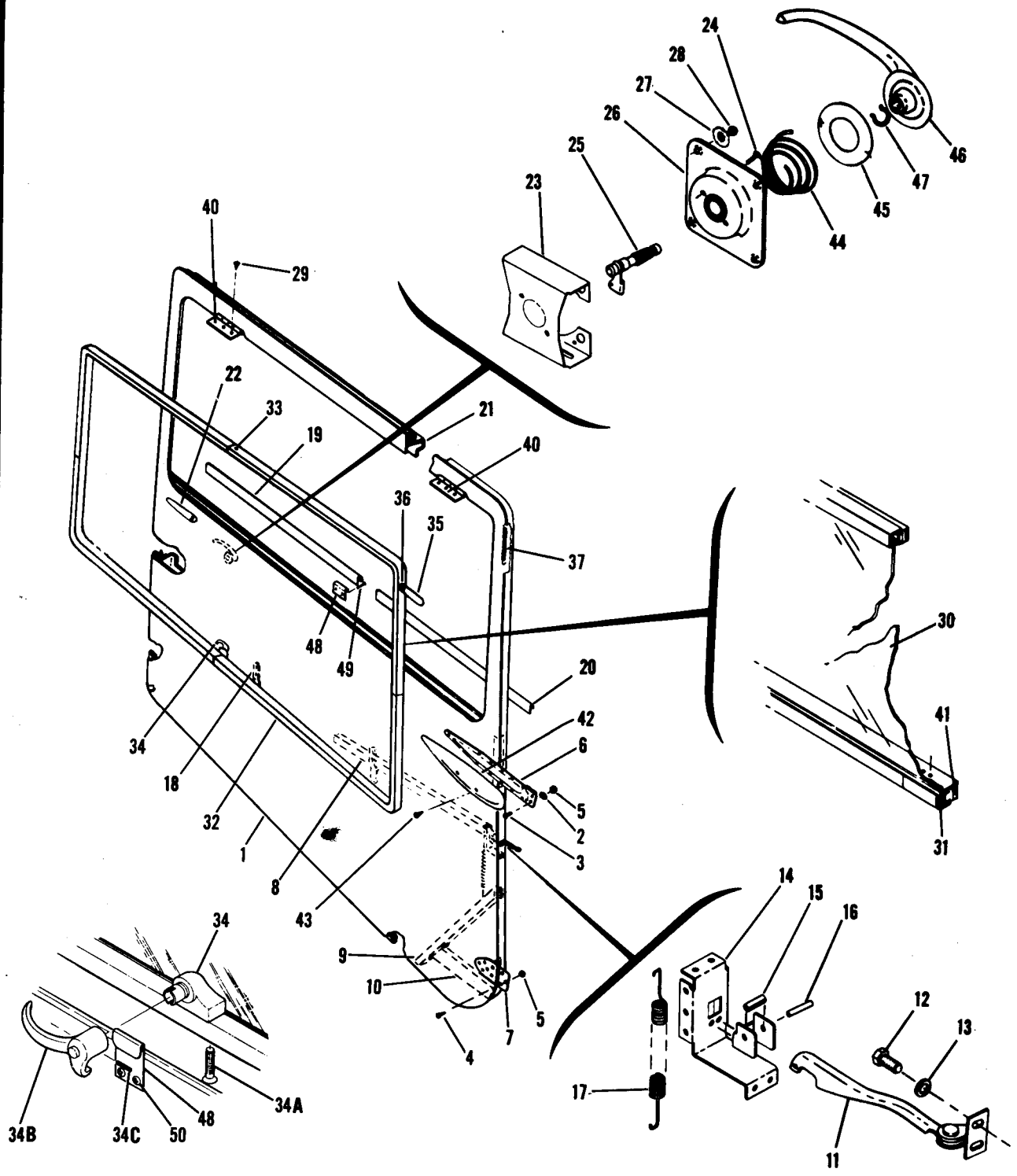

180 SERIAL 32662 & ON
182 SERIAL 33843 THRU 53007

Figure 46. Right Cabin Door Installation

FIGURE AND INDEX NO.	PART NUMBER	1 2 3 4 5 6 7 DESCRIPTION	UNITS PER ASSY	USABLE ON CODE
46- 30	0711051-1	GLASS ASSEMBLY-WINDOW	1	
	0711051-2	GLASS ASSEMBLY-WINDOW ----TINTED	1	L
- 31	S-1082-1	SEAL-WINDOW BULK ITEM 83.75 IN LONG	1	
		REF S-1082-1-83.75 CESSNA STANDARD		
- 32	0711050-6	FRAME-WINDOW	1	
		ATTACHING PARTS		
- 33	CR163C-4-4	RIVET CY	6	
		---*---		
- 34	0711050-200	BRACKET ASSEMBLY-WINDOW LATCH	1	
		ATTACHING PARTS		
-34A	NAS514P1032-14	SCREW	2	
	NAS43-3-34	SPACER	2	
		---*---		
-34B	0811725-40	HANDLE ASSEMBLY	1	
		ATTACHING PARTS		
-34C	NAS561P3-7	PIN-ROLL	1	
		---*---		
- 35	0711021-4	ARM ASSEMBLY-WINDOW	1	
		ATTACHING PARTS		
- 36	AN525-10R8	SCREW	1	
		---*---		
- 37	0711021-9	SPRING-WINDOW ARM	1	
		ATTACHING PARTS		
- 38		DELETED, NOT USED		
		---*---		
- 39		DELETED, NOT USED		
- 40	0411185-7	HINGE ASSEMBLY-WINDOW	2	
- 41	S-1152-1	SEAL-84.00 IN. LG. BULK ITEM REF S-1152-1-84	1	
- 42	0711001-21	FAIRING-DOOR UPPER HINGE	1	G
		ATTACHING PARTS		
- 43	S-1021Z-6-6	SCREW CESSNA STANDARD	2	
		---*---		
- 44	0413317-1	SPRING-DOOR HANDLE	1	
- 45	0511189-2	ESCUTCHEON-DOOR HANDLE	1	
- 46	0511303-1	HANDLE-DOOR INSIDE	1	G
	0711027-1	HANDLE-DOOR INSIDE	1	D
- 47	0511189-1	CLIP-DOOR HANDLE RETAINING	1	
- 48	0511241-1	PLATE-WINDOW LATCH	1	A
	0711026-1	PLATE-WINDOW LATCH	1	L
		ATTACHING PARTS		
- 49	S-1021Z-8-8	SCREW CESSNA STANDARD	2	
- 50	AN515-6R5	SCREW	2	A
		---*---		

A---180 SERIAL 32662 & ON
182 SERIAL 33843 THRU 53007
B---180 SERIAL 32662 THRU 50105
182 SERIAL 33843 THRU 34753
C---180 SERIAL 50106 THRU 50355
182 SERIAL 34754 THRU 51556
D---180 SERIAL 50356 & ON
182 SERIAL 51557 THRU 53007
E---182 SKYLANE SERIAL 34754 THRU 51556
F---182 SKYLANE SERIAL 51557 THRU 53007
G---180 SERIAL 32662 THRU 50355
182 SERIAL 33843 THRU 51556
I---180 SERIAL 32662 THRU 50105
182 SERIAL 33843 THRU 34753
J---180 SERIAL 50106 & ON
182 SERIAL 34754 THRU 53007
L---182 SKYLANE SERIAL 34754 THRU 53007
Q---180 SERIAL 50356 THRU 50911
182 SERIAL 51557 THRU 53007
R---180 SERIAL 18050912 & ON
T---180 SERIAL 32662 THRU 50911
182 SERIAL 33843 THRU 53007
U---180 SERIAL 50106 THRU 50911
182 SERIAL 34754 THRU 53007

Door and Window (Cont)

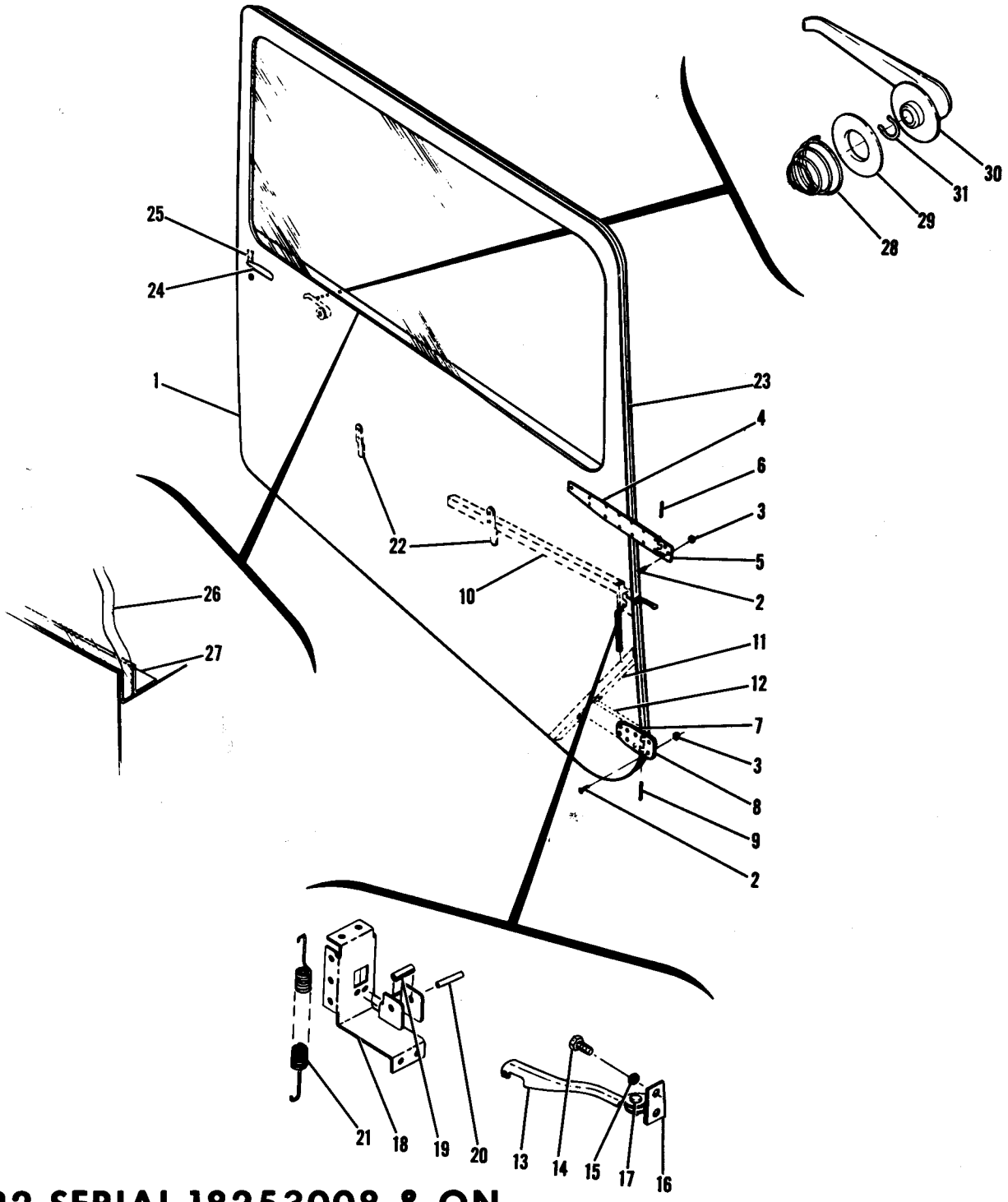

182 SERIAL 18253008 & ON

Figure 46A. Right Cabin Door Installation

FIGURE AND INDEX NO.	PART NUMBER	DESCRIPTION 1 2 3 4 5 6 7	UNITS PER ASSY	USABLE ON CODE
46A-		CABIN DOOR INSTALLATION-RH	NP	A
- 1	1210040-22	STRUCTURE ASSEMBLY-CABIN DOOR RH	1	B
	1210040-21	STRUCTURE ASSEMBLY-CABIN DOOR RH	1	C
		ATTACHING PARTS		
- 2	AN507-1032R12	SCREW	8	
- 3	MS20365-1032C	NUT	8	
		---*---		
- 4	0711037-2	HINGE-UPPER RH REAR	1	
- 5	0711037-6	HINGE-UPPER RH FORWARD	1	
		ATTACHING PARTS		
- 6	0711038-1	PIN-HINGE	1	
		---*---		
- 7	0711037-4	HINGE-LOWER RH REAR	1	
- 8	0711037-11	HINGE-LOWER RH FORWARD	1	
		ATTACHING PARTS		
- 9	0711038-1	PIN-HINGE	1	
		---*---		
- 10	0711001-26	STIFFENER-DOOR UPPER	1	
- 11	0711001-44	STIFFENER-DOOR LOWER	1	
- 12	0711001-42	BRACKET-LOWER HINGE REINFORCEMENT	1	
- 13	0711040-2	STOP ASSEMBLY-DOOR	1	
		ATTACHING PARTS		
- 14	AN3-3A	BOLT	2	
- 15	AN960-10L	WASHER	2	
		---*---		
- 16	0711039-2	HINGE ASSEMBLY-RH	1	
- 17	MS20450C12	RIVET	1	
- 18	0711001-36	BRACKET-ASSEMBLY-DOOR STOP	1	
- 19	0711001-52	SPACER	1	
- 20	NAS561-3-18	ROLLPIN-----EN	1	
- 21	0711001-29	SPRING-DOOR STOP	1	
- 22	0511106-37	CLIP-DOOR PANEL	2	
		ATTACHING PARTS		
	S-1021Z-4-4	SCREW CESSNA STANDARD	2	
		---*---		
- 23	S-363	SEAL-144.0 IN LONG BULK ITEM REF S-363-144 CESSNA STANDARD	1	
- 24	0711061-2	LATCH ASSEMBLY	1	
		ATTACHING PARTS		
	NAS220-5	SCREW	12	
		---*---		
- 25	0711034-1	STOP-LATCH	1	
- 26	1210040-8	GLASS-WINDOW RH TINTED	1	C
	1210040-23	GLASS-WINDOW RH CLEAR	1	B
- 27	1210040-10	RETAINER	1	
- 28	0413317-1	SPRING-DOOR HANDLE	1	
- 29	0511189-2	ESCUTCHEON-DOOR HANDLE	1	
- 30	0711027-1	HANDLE-DOOR INSIDE	1	
- 31	0511189-1	CLIP-DOOR HANDLE RETAINING	1	

182 SERIAL 18253008 & ON

A---182 SERIAL 18253008 & ON
182 SKYLANE SERIAL 18253008 & ON
B---182 SERIAL 18253008 & ON
C---182 SKYLANE SERIAL 18253008 & ON

Door & Window (Cont)

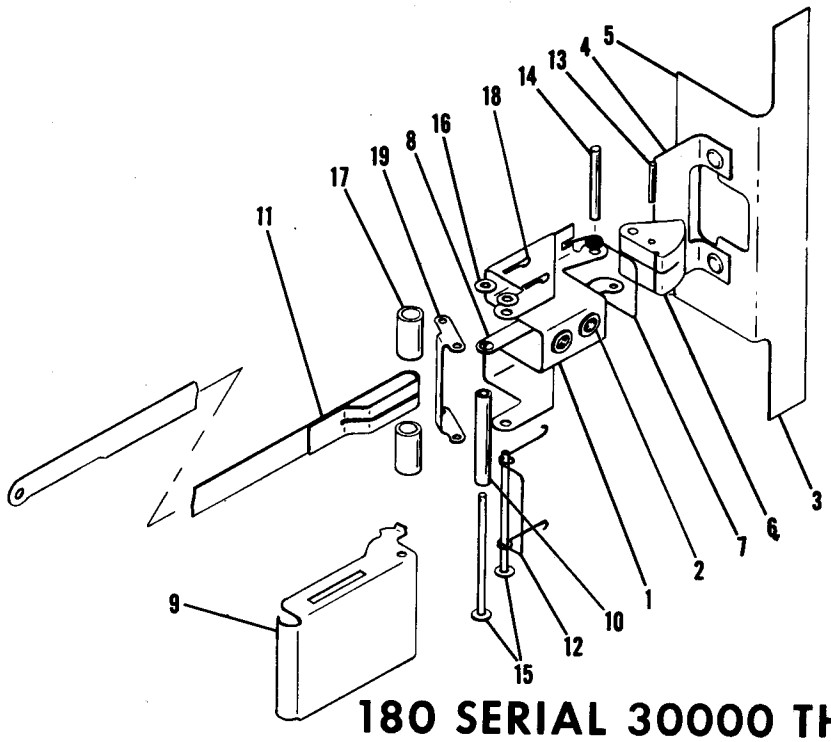

180 SERIAL 30000 THRU 32661
182 SERIAL 33000 THRU 33842

Figure 47. Cabin Door Latch Assembly

FIGURE AND INDEX NO.	PART NUMBER	DESCRIPTION 1 2 3 4 5 6 7	UNITS PER ASSY	USABLE ON CODE
47-	0511112-17	LATCH ASSEMBLY-DOOR	1	A
- 1	0511112-13	HOUSING ASSEMBLY-DOOR LATCH	1	
- 2	S10K75	RIVNUT-HOUSING-----GD	4	
- 3	0511112-15	BRACKET ASSEMBLY-DOOR LATCH	1	
- 4	0511112-4	BRACKET-LATCH	1	
- 5	0511112-14	PLATE-LATCH	1	
- 6	0411552	CATCH	1	
- 7	0511247-1	SPRING	1	
- 8	0511298-1	PULL BAR	1	
- 9	0411557	HANDLE	1	
- 10	0511298-2	SPACER	1	
- 11	0411575-7	STRAP	1	
- 12	0511119	SPRING	1	
- 13	MS20253-2-500	SHAFT	1	
- 14	MS20253-5-100	SHAFT	1	
- 15	MS20392-1-53	PIN	2	
- 16	AN960-4	WASHER	3	
- 17	NAS43DD-3-27	SPACER	2	
- 18	MS24665-132	PIN-COTTER	2	
- 19	0411559	SPACER	1	

A---182 SERIAL 33000 THRU 33842
180 SERIAL 30000 THRU 32661

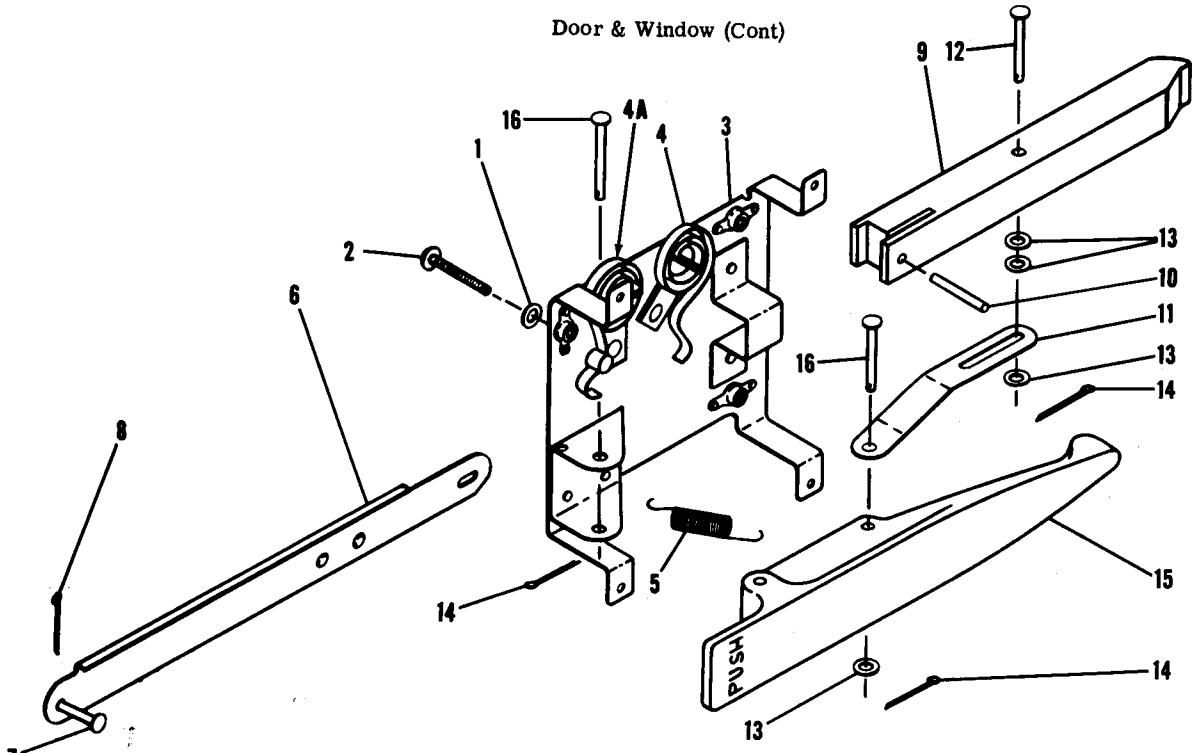

180 SERIAL 32662 THRU 50911
182 SERIAL 33843 THRU 53007

Figure 48. Cabin Door Latch Assembly

FIGURE AND INDEX NO.	PART NUMBER	DESCRIPTION 1 2 3 4 5 6 7	UNITS PER ASSY	USABLE ON CODE
48-		LATCH INSTALLATION-DOOR		
	0711020-1	LATCH ASSEMBLY-DOOR LH	1	A
	0711020-2	LATCH ASSEMBLY-DOOR RH	1	B
	0711020-7	LATCH ASSEMBLY-DOOR LH	1	B
	0711020-11	LATCH ASSEMBLY-DOOR LH	1	F
	0711020-12	LATCH ASSEMBLY-DOOR RH	1	G
		ATTACHING PARTS	1	J
- 1	AN910-3	WASHER	3	
- 2	AN520-10R6	SCREW	3	
		---*---		
- 3	0711018-7	PLATE ASSEMBLY LH	1	
	0711018-8	PLATE ASSEMBLY RH	1	
- 4	0711019-1	SPRING-STRAP	2	D
	0711019-1	SPRING-STRAP	1	E
- 4A	0711060-1	SPRING-HANDLE	1	E
- 5	0711016-1	STRAP ASSEMBLY-LATCH LH	1	
- 6	0711018-23	STRAP ASSEMBLY-LATCH RH	1	
	0711018-24	ATTACHING PARTS	1	
- 7	MS20392-1-7	PIN-STRAP	2	
- 8	MS24665-132	PIN-COTTER	2	
		---*---		
- 9	0711017	BOLT-LATCH	1	H
	0711017-1	BOLT-LATCH	1	G
- 10	5-9-028-125-0562	ROLL PIN EN	1	
- 11	0711018-15	PULL BAR-LATCH LH	1	
	0711018-16	PULL BAR-LATCH RH	1	
- 12	MS20392-1-23	PIN	1	
- 13	AN960-4	WASHER	4	

CONTINUED ON PAGE 118

FIGURE AND INDEX NO.	PART NUMBER	DESCRIPTION 1 2 3 4 5 6 7	UNITS PER ASSY	USABLE ON CODE
48- 14	MS24665-132	PIN-COTTER	3	
- 15	0711015-1	HANDLE-DOOR LATCH	1	B
	0711032-2	HANDLE-DOOR LATCH	1	C
- 16	MS20392-1-23	PIN	2	
		A---180 SERIAL 32662 THRU 50911		
		182 SERIAL 33843 THRU 53007		
		B---180 SERIAL 32662 THRU 50105		
		182 SERIAL 33843 THRU 34753		
		C---180 SERIAL 50106 THRU 50911		
		182 SERIAL 34754 THRU 53007		
		D---180 SERIAL 32662 THRU 50661		
		182 SERIAL 33843 THRU 52358		
		E---180 SERIAL 50662 THRU 50911		
		182 SERIAL 52359 THRU 53007		
		F---180 SERIAL 50106 THRU 50766		
		182 SERIAL 34754 THRU 52722		
		G---180 SERIAL 50767 THRU 50911		
		182 SERIAL 52723 THRU 53007		
		H---180 SERIAL 32662 THRU 50766		
		182 SERIAL 33843 THRU 52722		
		J---180 SERIAL 50106 THRU 50911		
		182 SERIAL 34754 THRU 53007		

FIGURE AND INDEX NO.	PART NUMBER	DESCRIPTION 1 2 3 4 5 6 7	UNITS PER ASSY	USABLE ON CODE
48A-		LATCH INSTALLATION-CABIN DOOR REMOVABLE	NP	A
	0711061-1	LATCH ASSEMBLY-CABIN DOOR LH	1	
	0711061-2	LATCH ASSEMBLY-CABIN DOOR RH	1	
		ATTACHING PARTS		
- 1	NAS220-5	SCREW	12	
		---*---		
- 2	0711062-1	BASE PLATE-LATCH LH	1	
	0711062-2	BASE PLATE-LATCH RH	1	
- 3	NAS697A08	NUT PLATE	2	
- 4	0711018-27	BRACKET	1	
- 5	0711132-1	BRACKET-LH	1	
	0711132-2	BRACKET-RH	1	
- 6	0711018-19	BRACKET-SPRING	2	
- 7	0711018-20	BRACKET-SPRING	2	
- 8	0711018-25	BRACKET-HANDLE	1	
- 9	0711063-1	BRACKET ASSEMBLY-DOOR LATCH LH	1	
	0711063-2	BRACKET ASSEMBLY-DOOR LATCH RH	1	
- 10	0711029-1	SHAFT ASSEMBLY-DOOR LATCH LH	1	
	0711029-2	SHAFT ASSEMBLY-DOOR LATCH RH	1	
- 11	0413195-5	PLATE ASSEMBLY-BEARING	1	
		ATTACHING PARTS		
- 12	AN520-10R9	SCREW	2	
- 13	AN936-B10	WASHER	2	
		●---*---		
- 14	0711060-1	SPRING-DOOR LATCH	1	
- 15	0711019-1	SPRING-DOOR LATCH	1	
- 16	0711017-1	BOLT-DOOR LATCH	1	
- 17	0711018-23	STRAP ASSEMBLY-LATCH LH	1	
	0711018-24	STRAP ASSEMBLY-LATCH RH	1	
		ATTACHING PARTS		
- 18	5-9-028-125-0562	ROLLPIN	1	
- 19	MS20392-1-7	PIN	1	
- 20	MS24665-132	PIN-COTTER	1	
		---*---		

180 SERIAL 18050912 & ON

182 SERIAL 18253008 & ON

CONTINUED ON PAGE 119

Door and Window (Cont)

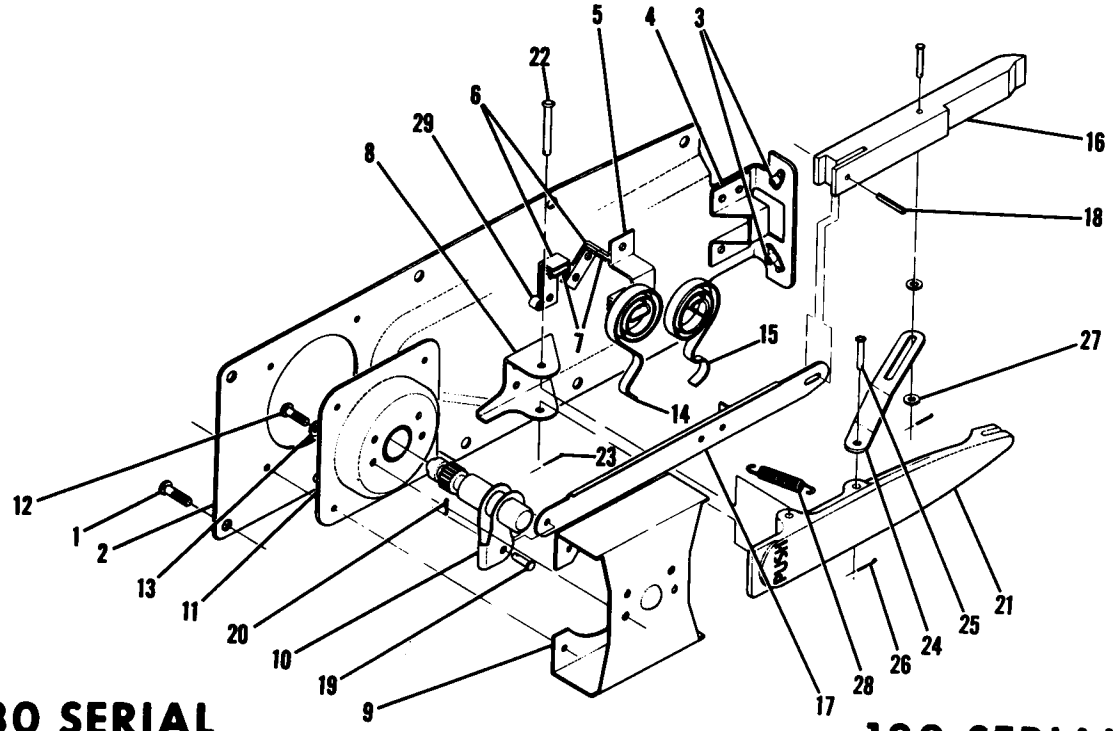

180 SERIAL 18050912 & ON

Figure 48A. Removable Latch

182 SERIAL 18253008 & ON

FIGURE AND INDEX NO.	PART NUMBER	DESCRIPTION 1 2 3 4 5 6 7	UNITS PER ASSY	USABLE ON CODE
48A- 21	0711032-2	HANDLE-LATCH	1	
		ATTACHING PARTS		
- 22	MS20392-1-33	PIN	1	
- 23	MS24665-132	PIN-COTTER	1	
		---*---		
- 24	0711018-15	PULL BAR-LATCH LH	1	
	0711018-16	PULL BAR-LATCH RH	1	
		ATTACHING PARTS		
- 25	MS20392-1-23	PIN	2	
- 26	MS24665-132	PIN-COTTER	2	
- 27	NAS70A-128-313	WASHER	3	
		---*---		
- 28	0711016-1	SPRING-HANDLE	1	
- 29	0711018-27	STOP	1	
		A---180 SERIAL 18050912 & ON		
		182 SERIAL 18253008 & ON		

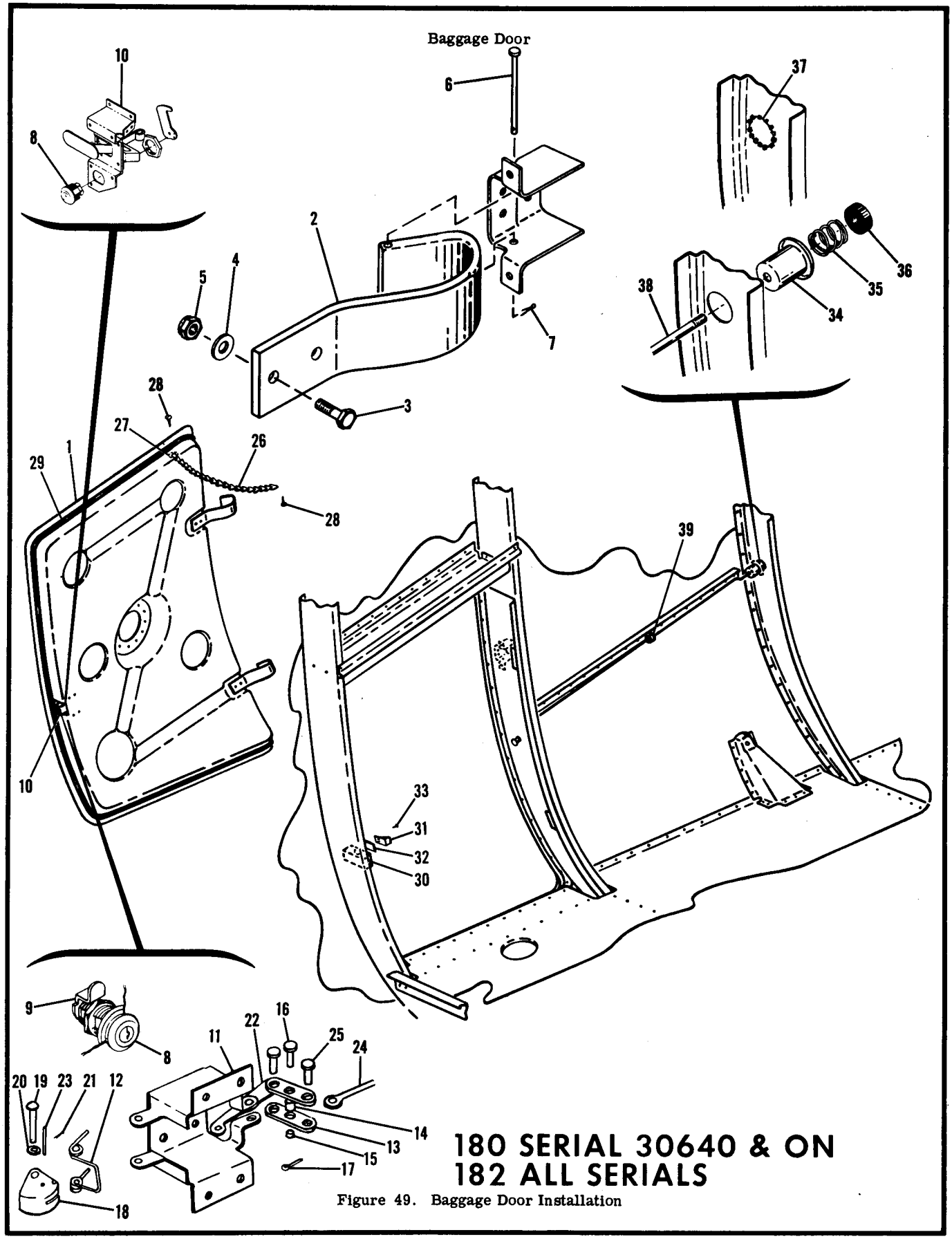

180 SERIAL 30640 & ON
182 ALL SERIALS

Figure 49. Baggage Door Installation

FIGURE AND INDEX NO.	PART NUMBER	DESCRIPTION 1 2 3 4 5 6 7	UNITS PER ASSY	USABLE ON CODE
49-		BAGGAGE DOOR INSTALLATION-FUSELAGE	NP	
- 1	0711101-1	DOOR ASSEMBLY-BAGGAGE	1	A
	0711101-22	DOOR ASSEMBLY-BAGGAGE	1	C
	0711101-33	DOOR ASSEMBLY-BAGGAGE	1	D
		ATTACHING PARTS		
- 2	0711102	HINGE-BAGGAGE DOOR	2	
- 3	AN520-10R10	SCREW	4	
- 4	AN960-10	WASHER	4	
- 5	MS20365-1032C	NUT	4	
- 6	MS20392-1-49	PIN-CLEVIS	2	
- 7	MS24665-132	PIN-COTTER	2	
		---*---		
- 8	0413323-7	LOCK ASSEMBLY-BAGGAGE DOOR	1	B
- 9	0711111-1	CAM-BAGGAGE DOOR LOCK	1	B
- 10	S-1189-1	LATCH ASSEMBLY-BAGGAGE DOOR	1	C
	S-1189-2	LATCH ASSEMBLY-BAGGAGE DOOR 2 WAY	1	D
	0711101-14	LATCH & ROD ASSEMBLY-BAGGAGE DOOR	1	A
	0311324	LATCH ASSEMBLY-BAGGAGE DOOR	1	
- 11	0311318	HOUSING-BAGGAGE DOOR LATCH	1	
- 12	0311284	SPRING-PANEL RETURN	1	
- 13	0311320	LEVER-PULL BAR	2	
		ATTACHING PARTS		
- 14	NAS42-4-8	SPACER	1	
- 15	NAS42-4-2	SPACER	1	
- 16	MS20392-1-13	PIN-FLATHEAD	1	
- 17	MS24665-132	PIN-COTTER	1	
		---*---		
- 18	0311281-3	PANEL-BAGGAGE DOOR LATCH	1	
		ATTACHING PARTS		
- 19	MS20392-1-49	PIN	1	
- 20	AN960-4	WASHER	1	
- 21	MS24665-132	PIN-COTTER	1	
		---*---		
- 22	0411555	PULL BAR-BAGGAGE DOOR LATCH	1	
		ATTACHING PARTS		
- 23	MS2053-2-1.0	SHAFT-PULL BAR CONNECTION	1	
		---*---		
- 24	0311448-1	ROD-BAGGAGE DOOR	1	
		ATTACHING PARTS		
- 25	MS20450C8-10	RIVET	1	
		---*---		
- 26	S-1194-1	CHAIN-BAGGAGE DOOR STOP	1	
		ATTACHING PARTS		
- 27	NAS680A08	NUTPLATE	1	
- 28	AN515-8R8	SCREW	2	
		---*---		
- 29	0711013-1	WEATHER STRIP-BAGGAGE DOOR	1	
- 30	0711101-7	REINFORCEMENT ASSEMBLY-STRIKE PLATE	1	
	22A5-82	NUTPLATE EN	2	
- 31	0311319	PLATE-STRIKE	1	A
	0311319-1	PLATE-STRIKE	1	B
		ATTACHING PARTS		
- 32	0311319-2	SHIM-STRIKE PLATE	1	B
- 33	AN515-8R8	SCREW	2	
		---*---		
- 34	0711101-12	RETAINER-PUSH BUTTON	1	A
- 35	0311415	SPRING	1	A
- 36	0311416	BUTTON-PUSH	1	A
- 37	51149	PLUG BUTTON-----UC	1	B
- 38	0311414-6	ROD ASSEMBLY-PUSH	1	A
		ATTACHING PARTS		
- 39	MS21919DG8	CLAMP	1	
	AN515-8R6	SCREW	1	
	MS20365-832C	NUT	1	
		---*---		

180 SERIAL 30640 & ON

182 ALL SERIALS

A---180 SERIAL 30640 THRU 32661
182 SERIAL 33000 THRU 33842
B---180 SERIAL 32662 & ON
182 SERIAL 33843 & ON
C---180 SERIAL 32662 THRU 18051063
182 SERIAL 33843 & ON
D---180 SERIAL 18051064 & ON
S-PART NOS APPEARING ON THIS PAGE ARE CESSNA STANDARD

Upholstery

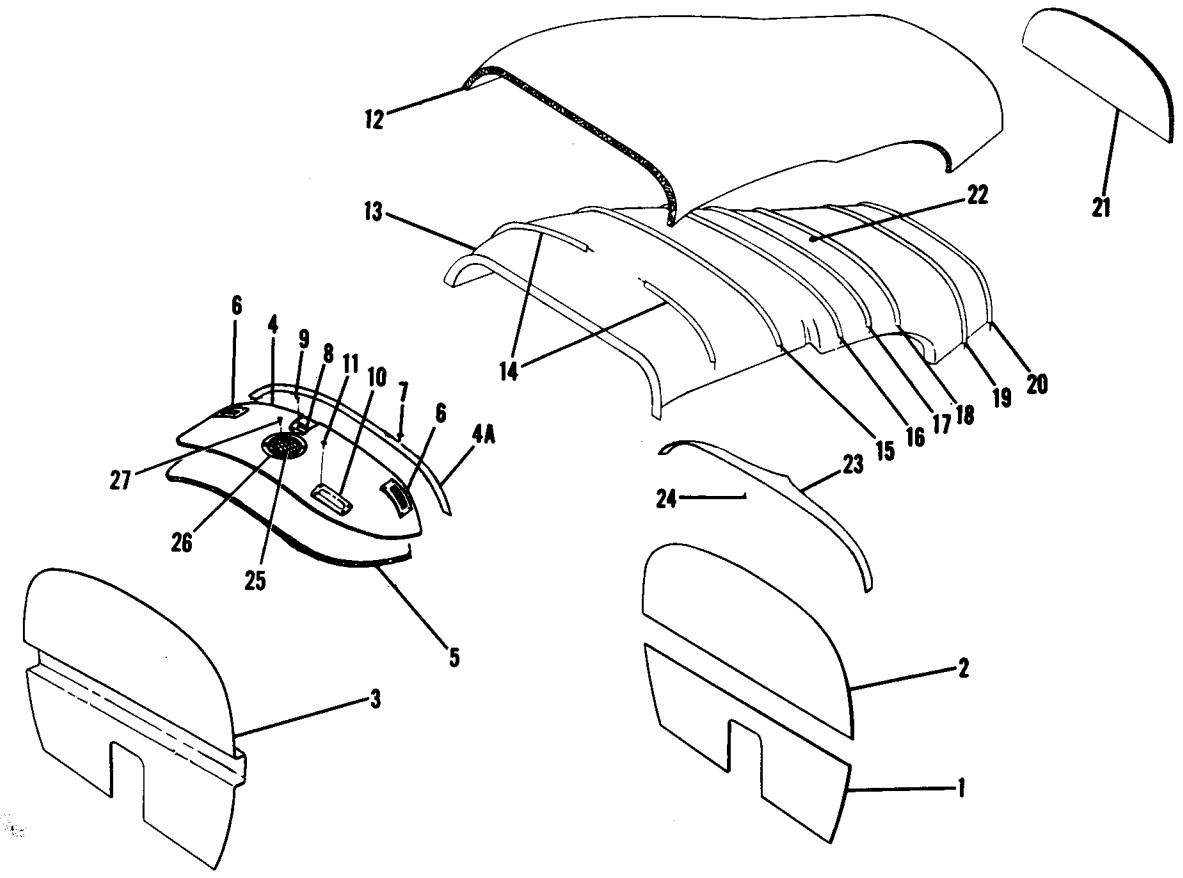

180-182 ALL SERIALS

Figure 50. Cabin Top and Firewall Upholstery Installation

FIGURE AND INDEX NO.	PART NUMBER	DESCRIPTION 1 2 3 4 5 6 7	UNITS PER ASSY	USABLE ON CODE
50-		UPHOLSTERY INSTALLATION-CABIN TOP & FIREWALL ----------	NP	
- 1	0700100-1	PANEL ASSEMBLY-FIREWALL LOWER ----------	1	A
- 2	0700100-135	PANEL ASSEMBLY-FIREWALL UPPER ----------	1	A
- 3	0700101-1	PANEL ASSEMBLY-FIREWALL ----------	1	B
	0700103-45	PANEL ASSEMBLY-FIREWALL ----------	1	C
	0700105-247	PANEL ASSEMBLY-FIREWALL ----------	1	D
- 4	0700101-20	COVER-COWL DECK ----------	1	B
	0700103-49	COVER-COWL DECK ----------	1	E
	0700105-26	COVER-COWL DECK ----------	1	F
	0700105-226	COVER-COWL DECK ----------	1	D
- 4A	0700058-1	RETAINER-PANEL COVER ----------	1	AC
- 5	0511001-131	SOUNDPROOFING-COWL DECK ----------	1	G
- 6	0413106-2	HANDLE-ASSIST ----------	2	H
		ATTACHING PARTS		
- 7	S-1021Z-4-6	SCREW CESSNA STANDARD ----------	4	
	NAS446-1-3	NUT TIN A1776-4Z-3 ----------	4	
		---*---		

CONTINUED ON PAGE 123 & 124

FIGURE AND INDEX NO.	PART NUMBER	DESCRIPTION 1 2 3 4 5 6 7	UNITS PER ASSY	USABLE ON CODE
50- 8	0713066-1	FAIRING-COWL DECK ----------	1	F
		ATTACHING PARTS		
- 9	S-1021Z-4-6	SCREW CESSNA STANDARD ----------	5	
		---*---		
- 10	0713046	RETAINER-UPHOLSTERY ----------	1	J
		ATTACHING PARTS		
- 11	S-1021Z-4-6	SCREW CESSNA STANDARD ----------	4	
		---*---		
- 12	0700105-19	PANEL ASSEMBLY-CABIN TOP SOUNDPROOF----------	1	F
	0511001-186	PANEL ASSEMBLY-CABIN TOP SOUNDPROOF----------	1	K
- 13	0700100-28	HEADLINER ASSEMBLY-CABIN TOP ----------	1	L
		HEADLINER ASSEMBLY-CABIN TOP ----------	NP	F
		HEADLINER ASSEMBLY-CARIN TOP ----------	NP	V
		HEADLINER ASSEMBLY-CABIN TOP ----------	NP	W
		HEADLINER ASSEMBLY-CABIN TOP ----------	NP	X
	0700105-18	HEADLINER ASSEMBLY-CABIN TOP----------	1	F
	0700105-218	HEADLINER ASSEMBLY-CABIN TOP----------	1	V
	0700105-318	HEADLINER ASSEMBLY-CABIN TOP----------	1	W
	0700105-317	HEADLINER ASSEMBLY-CABIN TOP----------	1	X
- 14	0511001-22	WIRE-HEADLINER----------	2	Z
	1200086-5	WIRE-HEADLINER----------	1	AA
- 15	0511001-20	WIRE-HEADLINER----------	1	Z
	1200086-6	WIRE-HEADLINER----------	1	AA
- 16	0700100-191	WIRE-HEADLINER----------	1	M
- 17	0511001-148	WIRE-HEADLINER----------	1	Y
	0700105-305	WIRE-HEADLINER----------	1	AD
- 18	0511001-147	WIRE-HEADLINER----------	1	Z
	0700105-323	WIRE-HEADLINER----------	1	W
	0700105-303	WIRE-HEADLINER----------	1	X
- 19	0511001-149	WIRE-HEADLINER----------	1	Z
	0700105-322	WIRE-HEADLINER----------	1	W
	0700105-302	WIRE-HEADLINER----------	1	X
- 20	0700100-205	WIRE-HEADLINER----------	1	Z
	0700105-321	WIRE-HEADLINER----------	1	W
	0700105-301	WIRE-HEADLINER----------	1	X
- 21	0700100-82	PANEL ASSEMBLY-CABIN REAR UPPER SOUNDPROOF ----------	1	A
	0700101-82	PANEL ASSEMBLY-CABIN REAR UPPER SOUNDPROOF ----------	1	N
	0700105-282	PANEL ASSEMBLY-CABIN REAR UPPER SOUNDPROOF ----------	1	D
- 22	0511186	HOOK-COAT HANGER----------	1	
- 23	0700109-1	TIARA ASSEMBLY ----------	1	S
	0700109-6	TIARA ASSEMBLY ----------	1	R
		ATTACHING PARTS		
- 24	S-1021Z-4-8	SCREW-CESSNA STANDARD----------	4	S
	S-1023Z-4-8C	SCREW CESSNA STANDARD ----------	4	R
		---*---		
- 25	0513172-2	SCREEN----------	1	P
	0713155-2	SCREEN----------	1	AC
- 26	0513172-1	RETAINER ----------	1	P
	0713155-3	RETAINER ----------	1	AC
		ATTACHING PARTS		
- 27	S-1021Z-8-8	SCREW CESSNA STANDARD ----------	4	
	NAS395-16-3	NUT TIN A1789-8Z-3 ----------	4	
		---*---		
	B1 *	SOUNDPROOFING-FIBERGLASS MAT 1 IN. THICK BULK ITEM	AR	
		A---180 SERIAL 30000 THRU 30639		
		B---180 SERIAL 30640 THRU 32150		
		C---180 SERIAL 32151 THRU 50355		
		182 SERIAL 33000 THRU 51556		
		D---180 SERIAL 50356 & ON		
		182 SERIAL 51557 & ON		
		E---180 SERIAL 32151 THRU 32661		
		182 SERIAL 33000 THRU 33842		
		F---180 SERIAL 32662 THRU 50355		
		182 SERIAL 33843 THRU 51556		
		G---180 SERIAL 32151 & ON		
		182 SERIAL 33000 & ON		
		H---180 SERIAL 30640 THRU 32661		
		182 SERIAL 33000 THRU 33842		
		J---180 SERIAL 30640 & ON		
		182 SERIAL 33000 & ON		
		K---180 SERIAL 30000 THRU 32661 & 50356 & ON		
		182 SERIAL 33000 THRU 33842 & 51557 & ON		
		L---180 SERIAL 30000 THRU 32661		
		182 SERIAL 33000 THRU 33842		
		M---180 SERIAL 30000 & ON		
		182 SERIAL 33000 & ON		
		CONTINUED ON PAGE 124		

FIGURE AND INDEX NO.	PART NUMBER	DESCRIPTION 1 2 3 4 5 6 7	UNITS PER ASSY	USABLE ON CODE
50-		N---180 SERIAL 30640 THRU 50355 182 SERIAL 33000 THRU 51556 O---182 SKYLANE SERIAL 34754 & ON P---180 SERIAL 50840 THRU 50911 182 SERIAL 51940 THRU 53007 R---182 SKYLANE SERIAL 52359 & ON S---182 SKYLANE SERIAL 34754 THRU 52358 T---180 SERIAL 32662 & ON 182 SERIAL 33843 THRU 52358 U---182 SERIAL 52359 & ON V---180 SERIAL 50356 THRU 50661 182 SERIAL 51557 THRU 52358 W---180 SERIAL 50662 & ON X---182 SERIAL 52359 & ON Y---180 SERIAL 30000 THRU 18051063 182 SERIAL 33000 THRU 52358 Z---180 SERIAL 30000 THRU 50661 182 SERIAL 33000 THRU 52358 AA--180 SERIAL 50662 & ON 182 SERIAL 52359 & ON AB--180 SERIAL 50356 THRU 50911 182 SERIAL 51557 THRU 53007 AC--180 SERIAL 18050912 & ON 182 SERIAL 18253008 & ON AD--180 SERIAL 18051064 & ON 182 SERIAL 52359 & ON *NOTE. GIVE DIMENSIONS WHEN ORDERING		

This page intentionally left blank.

Upholstery (Cont)

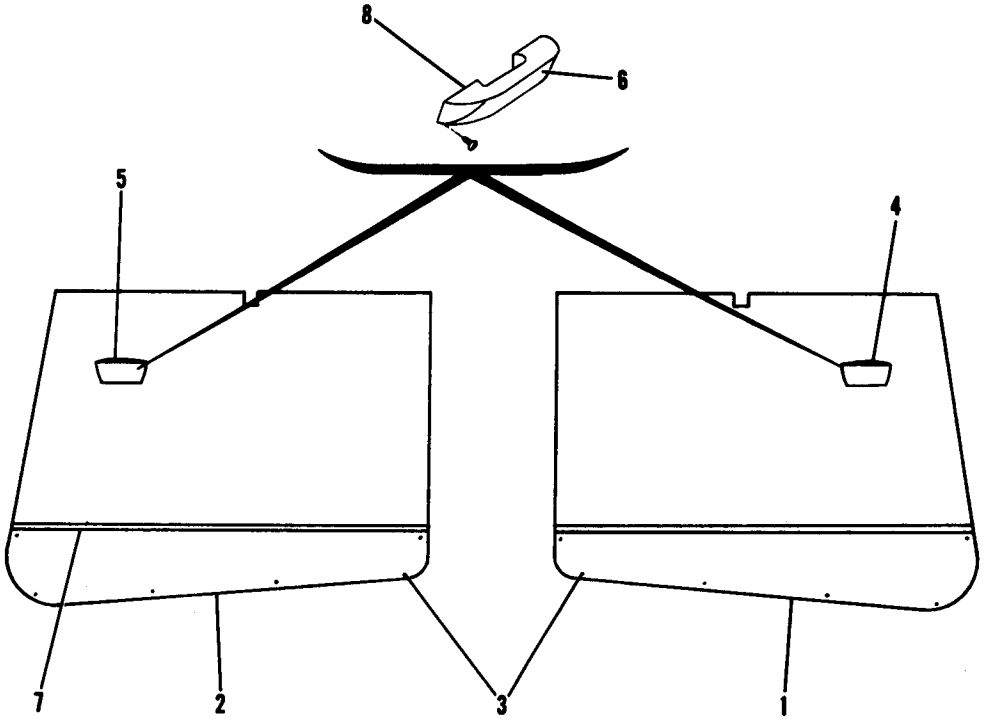

180-182 ALL SERIALS

Figure 51. Cabin Doors Upholstery Installation

FIGURE AND INDEX NO.	PART NUMBER	DESCRIPTION 1 2 3 4 5 6 7	UNITS PER ASSY	USABLE ON CODE
51-		UPHOLSTERY INSTALLATION-CABIN DOORS ----------	NP	
- 1	0700100-9	PANEL ASSEMBLY-UPHOLSTERY DOOR LH ----------	1	A
- 2	0700100-10	PANEL ASSEMBLY-UPHOLSTERY DOOR RH ----------	1	A
	0700101-9	PANEL ASSEMBLY-UPHOLSTERY DOOR LH ----------	1	B
	0700101-10	PANEL ASSEMBLY-UPHOLSTERY DOOR RH ----------	1	B
	0700102-9	PANEL ASSEMBLY-UPHOLSTERY DOOR LH ----------	1	C
	0700102-10	PANEL ASSEMBLY-UPHOLSTERY DOOR RH ----------	1	C
	0700103-3	PANEL ASSEMBLY-UPHOLSTERY DOOR LH ----------	1	D
	0700103-4	PANEL ASSEMBLY-UPHOLSTERY DOOR RH ----------	1	D
	0700105-3	PANEL ASSEMBLY-UPHOLSTERY DOOR LH ----------	1	E
	0700105-4	PANEL ASSEMBLY-UPHOLSTERY DOOR RH ----------	1	E
	0700105-73	PANEL ASSEMBLY-UPHOLSTERY DOOR LH ----------	1	F
	0700105-74	PANEL ASSEMBLY-UPHOLSTERY DOOR RH ----------	1	F
	0700105-273	PANEL ASSEMBLY-UPHOLSTERY DOOR LH ----------	1	J

CONTINUED ON PAGE 127

	1210054-1	SPACER	2	N
		---*---		
- 7	0700100-158	STRIP-PANEL TRIM	1	A
- 8	1200089-2	DOOR PULL ASSEMBLY PINE FROST	1	M
	1200089-3	DOOR PULL ASSEMBLY-COPPER COTTA	1	M
		ATTACHING PARTS		
	AN520-416R20	SCREW	2	M
	AN960-C416L	WASHER	2	M
	1210054-1	SPACER	2	M
		---*---		

A---180 SERIAL 30000 THRU 30639
B---180 SERIAL 30640 THRU 31260
C---180 SERIAL 31261 THRU 32150
D---180 SERIAL 32151 THRU 32661
182 SERIAL 33000 THRU 33842
E---180 SERIAL 32662 THRU 50105
182 SERIAL 33843 THRU 34753
F---180 SERIAL 50106 THRU 50355
182 SERIAL 34754 THRU 51556
H---180 SERIAL 32662 THRU 50355
182 SERIAL 33843 THRU 51556
J---180 SERIAL 50356 THRU 50911
182 SERIAL 51557 THRU 53007
K---180 SERIAL 18050912 & ON
182 SERIAL 18253008 & ON
L---180 SERIAL 30000 THRU 50911
182 SERIAL 33000 THRU 53007
M---180 SERIAL 18051064 & ON

Upholstery (Cont)

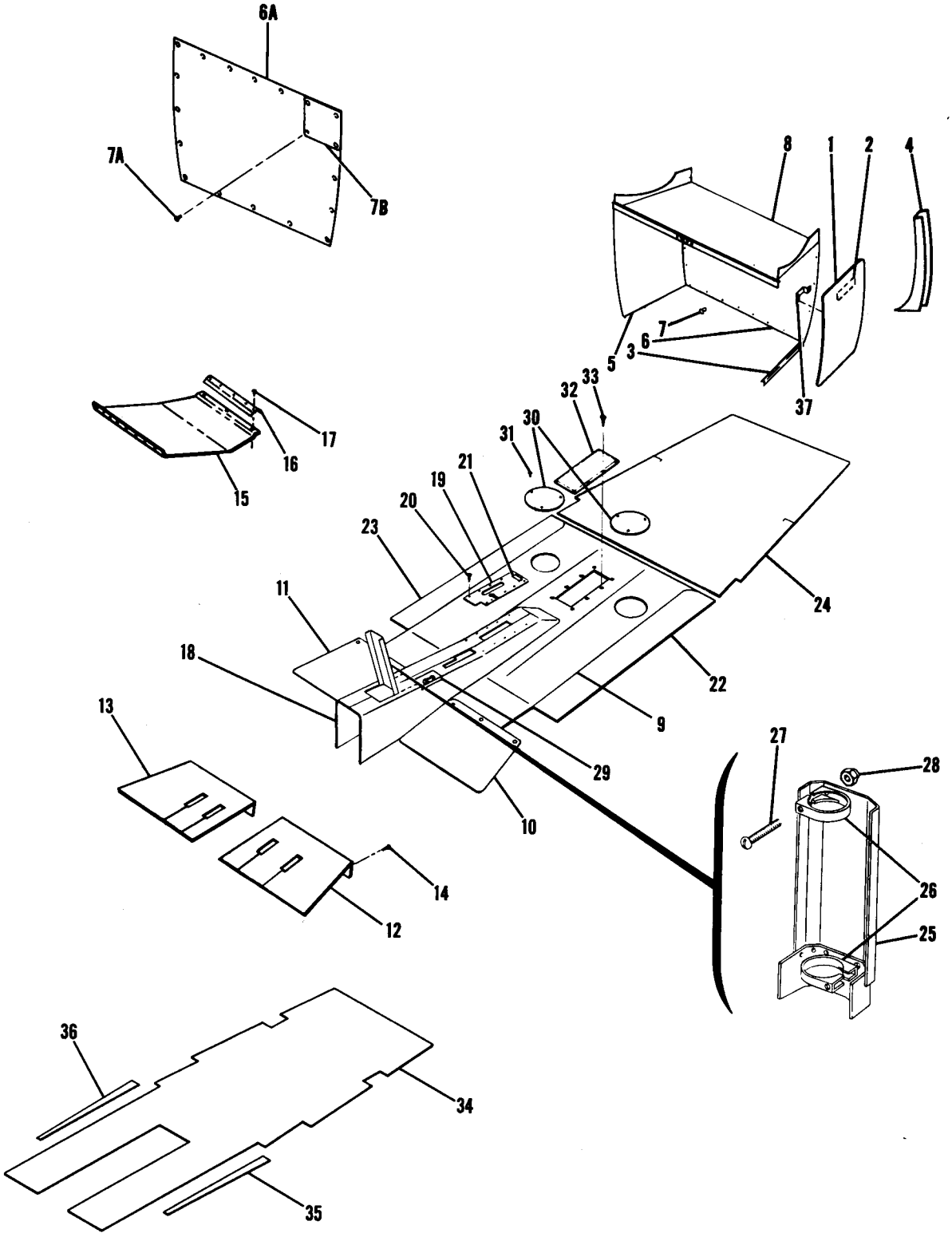

180-182 ALL SERIALS

Figure 52. Floorboards and Baggage Compartment Upholstery Installation

FIGURE AND INDEX NO.	PART NUMBER	DESCRIPTION 1 2 3 4 5 6 7	UNITS PER ASSY	USABLE ON CODE
52-		UPHOLSTERY INSTALLATION-FLOORBOARD & BAGGAGE COMPARTMENT ----	NP	
- 1	0700100-3	PANEL ASSEMBLY-BAGGAGE COMPARTMENT LH ----------	1	A
	0700101-38	PANEL ASSEMBLY-BAGGAGE DOOR ---- 180-182 ----------	1	B
	0700105-238	PANEL ASSEMBLY-BAGGAGE DOOR ---- ALL SERIALS -------	1	W
	0700114-25-273	PANEL ASSEMBLY-BAGGAGE DOOR	1	X
		ATTACHING PARTS		
	99608	STUD UC----------	19	Y
	S-1021Z-6-8	SCREW CESSNA STANDARD ----------	12	X
		---*---		
- 2	0710032-3	PLACARD-BAGGAGE DOOR ----------	1	V
	0512166-3	PLACARD-BAGGAGE OR AUXILIARY PASSENGER ----------	1	X
		ATTACHING PARTS		
	S-1021Z-4-6	SCREW CESSNA STANDARD ----------	2	
		---*---		
- 3	0311623-1	SCUFF PLATE-BAGGAGE COMPARTMENT FLOOR ----------	1	D
		ATTACHING PARTS		
	S-1021Z-4-4	SCREW CESSNA STANDARD ----------	3	
		---*---		
- 4	0700101-54	FILLER ASSEMBLY-BAGGAGE COMPARTMENT LH ----------	1	B
	0700105-265	FILLER ASSEMBLY-BAGGAGE COMPARTMENT LH ----------	1	C
- 5	0700100-4	PANEL ASSEMBLY-BAGGAGE COMPARTMENT SIDE RH ----------	1	A
	0700101-4	PANEL ASSEMBLY-BAGGAGE COMPARTMENT SIDE RH ----------	1	B
	0700105-204	PANEL ASSEMBLY-BAGGAGE COMPARTMENT SIDE RH ----------	1	C
		ATTACHING PARTS		
	S-1021Z-4-4	SCREW CESSNA STANDARD ----------	4	
		---*---		
- 6	0700100-2	PANEL ASSEMBLY-BAGGAGE COMPARTMENT REAR ----------	1	A
	0700101-2	PANEL ASSEMBLY-BAGGAGE COMPARTMENT REAR ----------	1	B
	0700105-202	PANEL ASSEMBLY-BAGGAGE COMPARTMENT REAR ----------	1	C
- 6A	0700105-418	PANEL ASSEMBLY-BAGGAGE COMPARTMENT REAR ----------	1	
		USE WHEN OXYGEN SYSTEM IS INSTALLED		
		ATTACHING PARTS		
- 7	49265F938	STUD UC----------	18	
- 7A	49265F938	STUD UC-----USE WHEN OXYGEN SYSTEM IS INSTALLED ----	19	
		---*---		
- 7B	0700105-419	COVER ASSEMBLY-----USE WHEN OXYGEN SYSTEM IS INSTALLED	1	
- 8	0513013	SHELF-BAGGAGE ----------	1	A
	0513013-8	SHELF-BAGGAGE ----------	1	E
	0513013-11	SHELF-BAGGAGE ----------	1	U
	0710030-1	BAGGAGE SHELF ASSEMBLY ----------	1	T
		ATTACHING PARTS		
	S-1021Z-4-4	SCREW CESSNA STANDARD ----------	10	
	AN3-3A	BOLT ----------	4	F
		---*---		
	0512120	PLACARD-BAGGAGE LOAD LIMITS ----------	1	J
	0512120-1	PLACARD-BAGGAGE LOAD LIMITS ----------	1	F
		CARPET & KICK PLATE INSTALLATION ----------	NP	
		CARPET & KICK PLATE COMPONENTS ----------	NP	A
		CARPET ASSEMBLY-CABIN FLOOR CENTER ----------	NP	
		CARPET & KICK PLATE COMPONENTS ----------	NP	G
		CARPET & KICK PLATE COMPONENTS ----------	NP	H
	0700105-243	CARPET ASSEMBLY-CABIN FLOOR CENTER ----------	1	W
	0700105-203	CARPET ASSEMBLY-CABIN FLOOR CENTER USED WITH DUAL----	1	W
		CONTROLS		
- 9	0700100-27	CARPET-CABIN FLOOR CENTER ----------	1	J
	0500103-60	CARPET-CABIN FLOOR CENTER ----------	1	M
	0700105-201	CARPET-CABIN FLOOR CENTER ----------	1	W
		ATTACHING PARTS		
	S-1023A-4-6	SCREW CESSNA STANDARD ----------	11	
	S-1066B1	WASHER AU-VE-CO ----------	11	
		---*---		

CONTINUED ON PAGES 130 & 131

FIGURE AND INDEX NO.	PART NUMBER		DESCRIPTION	UNITS PER ASSY	USABLE ON CODE
			1 2 3 4 5 6 7		
52- 10	0700101-143		KICK PLATE-CARPET CENTER LH	1	Y
	0511475-1		KICK PLATE-LH	1	X
- 11	0700101-144	*	KICK PLATE-CARPET CENTER RH USED WITH DUAL CONTROLS	1	K
	0700101-144		KICK PLATE-CARPET CENTER RH USED WITH DUAL CONTROLS	1	L
	0511475-2		KICK PLATE-RH USED WITH DUAL CONTROLS	1	X
			SHIELD ASSEMBLY-RUDDER BAR LH	NP	A
			SHIELD ASSEMBLY-RUDDER BAR RH	NP	A
- 12	0700101-145		SHIELD ASSEMBLY-RUDDER BAR LH	1	E
- 13	0700101-146		SHIELD ASSEMBLY-RUDDER BAR RH	1	E
	0700103-127		SHIELD ASSEMBLY-RUDDER BAR LH	1	M
	0700103-130		SHIELD ASSEMBLY-RUDDER BAR RH USED WITH DUAL CONTROLS	1	M
	0700105-261		SHIELD ASSEMBLY-RUDDER BAR LH DELUXE	1	C
	0700105-262		SHIELD ASSEMBLY-RUDDER BAR RH DELUXE-----USED WITH DUAL CONTROLS	1	C
	0700105-447		SHIELD ASSEMBLY-RUDDER BAR LH UTILITY	1	X
	0700105-448		SHIELD ASSEMBLY-RUDDER BAR RH UTILITY USED WITH DUAL CONTROLS	1	X
			ATTACHING PARTS		
- 14	S-1021Z-8-8		SCREW CESSNA STANDARD	8	
			---*---		
	0713001-1		SHIELD-RUDDER BAR LH	1	A
	0713001-3		SHIELD-RUDDER BAR LH	1	D
	0713001-2		SHIELD-RUDDER BAR RH	1	
- 15	0713049-4		SHIELD ASSEMBLY-RUDDER BAR RH	1	R
	0713049-10		SHIELD ASSEMBLY-RUDDER BAR RH	1	C
- 16	0713049-7		RETAINER-SHIELD	1	F
			ATTACHING PARTS		
- 17	S-1021Z-8-14		SCREW CESSNA STANDARD	3	
			---*---		
- 18	0700100-33		CARPET ASSEMBLY-TUNNEL	1	J
	0700103-55		CARPET ASSEMBLY-TUNNEL	1	M
	0700105-216		CARPET ASSEMBLY-TUNNEL	1	W
	0700105-433		COVER-TUNNEL ASSEMBLY	1	X
- 19	0713014		COVER ASSEMBLY-TUNNEL AFT	1	W
			ATTACHING PARTS		
- 20	S-1021Z-8-10C		SCREW CESSNA STANDARD	12	P
	S-1021Z-8-10		SCREW CESSNA STANDARD	12	Q
			---*---		
- 21	0511168		PLACARD-FUEL SELECTOR VALVE	1	
- 22	0700100-25		CARPET-SIDE STRIP LH	1	J
- 23	0700100-26		CARPET-SIDE STRIP RH	1	J
- 24	0700100-34		CARPET ASSEMBLY-BAGGAGE COMPARTMENT	1	
			ATTACHING PARTS		
	99608-K2215		STUD UC	AR	
			---*---		
- 25	0411293		SHIELD ASSEMBLY-CONTROL TEE	1	R
	0700105-266		SHIELD ASSEMBLY-CONTROL TEE	1	C
			ATTACHING PARTS		
- 26	0411840		CLAMP	2	
- 27	AN515-6R36		SCREW	2	
- 28	MS20365-632C		NUT	2	
			---*---		
- 29	0713093-2-243		COVER-RUDDER TRIM WHEEL	1	S
			ATTACHING PARTS		
	S-1021Z-8-10		SCREW CESSNA STANDARD	4	O
	S-1021Z-6-8		SCREW CESSNA STANDARD	4	C
			---*---		
- 30	0311516-3		COVER PLATE-INSPECTION	2	J
			ATTACHING PARTS		
- 31	S-1021Z-8-8		SCREW CESSNA STANDARD	3	
			---*---		

CONTINUED ON PAGE 131

FIGURE AND INDEX NO.	PART NUMBER	DESCRIPTION 1 2 3 4 5 6 7	UNITS PER ASSY	USABLE ON CODE
52- 32	0311516-6	COVER PLATE-INSPECTION ATTACHING PARTS	1	J
- 33	49330	STUD UC ---*---	8	
- 34	0700104-28	FLOOR COVERING	1	X
- 35	0700104-29	FLOOR COVERING SIDE STRIP LH	1	X
- 36	0700104-30	FLOOR COVERING SIDE STRIP RH	1	X
- 37	S-1273-1	HANDLE-BAGGAGE DOOR PULL CESSNA STANDARD ATTACHING PARTS	1	X
	AN515-8R8	SCREW ---*---	2	X

A---180 SERIAL 30000 THRU 30639
B---180 SERIAL 30640 THRU 50355
182 SERIAL 33000 THRU 51556
C---180 SERIAL 50356 & ON
182 SERIAL 51557 & ON
D---180 SERIAL 30640 & ON
182 SERIAL 33000 & ON
E---180 SERIAL 30640 THRU 32150
F---180 SERIAL 32151 & ON
182 SERIAL 33000 & ON
G---180 SERIAL 32151 THRU 50355
182 SERIAL 33000 THRU 33842
H---182 SERIAL 33843 THRU 51556
J---180 SERIAL 30000 THRU 32150
K---180 SERIAL 30000 THRU 32150 & 50356 THRU 18051063
182 SERIAL 51557 & ON
L---180 SERIAL 32662 THRU 50355
182 SERIAL 33843 THRU 51556
M---180 SERIAL 32151 THRU 50355
182 SERIAL 33000 THRU 51556
O---182 SERIAL 34754 THRU 51556
P---180 SERIAL 30000 THRU 50355
182 SERIAL 33000 THRU 34753
Q---180 SERIAL 50106 & ON
182 SERIAL 34754 & ON
R---180 SERIAL 30000 THRU 50355
182 SERIAL 33000 THRU 51556
S---182 SERIAL 34754 & ON
T---182 SERIAL 52359 & ON
U---180 SERIAL 32151 & ON
182 SERIAL 33000 THRU 52358
V---180 SERIAL 30640 THRU 18051063
182 SERIAL 33000 & ON
W---180 SERIAL 50356 THRU 18051063
182 SERIAL 51557 & ON
X---180 SERIAL 18051064 & ON
Y---180 SERIAL 30000 THRU 18051063
182 SERIAL 33000 & ON
#NOTE. THIS ITEM NOT INCLUDED IN 0700105-243 CARPET ASSEMBLY.

FIGURE AND INDEX NO.	PART NUMBER	DESCRIPTION 1 2 3 4 5 6 7	UNITS PER ASSY	USABLE ON CODE
53-		UPHOLSTERY INSTALLATION-CABIN SIDE PANELS	NP	
- 1	0700100-7	PANEL ASSEMBLY-SIDEWALL FRONT LH	1	A
	0700101-7	PANEL ASSEMBLY-SIDEWALL FRONT LH	1	B
	0700102-7	PANEL ASSEMBLY-SIDEWALL FRONT LH	1	C
	0700103-1	PANEL ASSEMBLY-SIDEWALL FRONT LH	1	D
- 2	0700100-8	PANEL ASSEMBLY-SIDEWALL FRONT RH	1	A
	0700101-8	PANEL ASSEMBLY-SIDEWALL FRONT RH	1	B
	0700102-8	PANEL ASSEMBLY-SIDEWALL FRONT RH	1	C
	0700103-2	PANEL ASSEMBLY-SIDEWALL FRONT RH	1	D
- 3	0411030-5	RETAINER-ASH RECEPTACLE	1	E
	0411030-6	TRAY-ASH RECEPTACLE	1	E
		ATTACHING PARTS		
	S-1021Z-4-8	SCREW CESSNA STANDARD	2	
	NAS446-1-3	NUT TIN A1776-4Z-3	2	
		---*---		
- 4	0700100-192	RETAINER-UPHOLSTERY	1	F
		ATTACHING PARTS		
	S-1022Z-4-4	SCREW CESSNA STANDARD	2	
		---*---		
- 5	0700100-193	RETAINER-UPHOLSTERY	1	D
		ATTACHING PARTS		
	S-1022Z-4-4	SCREW CESSNA STANDARD	4	
		---*---		
- 6	0700105-1	PANEL ASSEMBLY-SIDEWALL LOWER FRONT LH	1	G
	0700105-53	PANEL ASSEMBLY-SIDEWALL LOWER FRONT LH	1	H
	0700105-253	PANEL ASSEMBLY-SIDEWALL LOWER FRONT LH	1	AR
	0700105-455	PANEL ASSEMBLY-SIDEWALL FRONT LH DELUXE	1	AQ
	0700105-435	PANEL ASSEMBLY-SIDEWALL FRONT LH UTILITY	1	AQ
- 7	0700105-2	PANEL ASSEMBLY-SIDEWALL LOWER FRONT RH	1	G
	0700105-54	PANEL ASSEMBLY-SIDEWALL LOWER FRONT RH	1	H
	0700105-254	PANEL ASSEMBLY-SIDEWALL LOWER FRONT RH	1	AR
	0700105-456	PANEL ASSEMBLY-SIDEWALL FRONT RH DELUXE	1	AQ
	0700105-436	PANEL ASSEMBLY-SIDEWALL FRONT RH UTILITY	1	AQ
- 8	0700100-192	RETAINER-UPHOLSTERY	1	K
		ATTACHING PARTS		
	S-1023A-4-6	SCREW CESSNA STANDARD	4	
		---*---		
- 9	0700105-28	RETAINER-UPHOLSTERY	1	K
		ATTACHING PARTS		
	S-1023A-4-6	SCREW CESSNA STANDARD	2	
		---*---		
- 10	0700105-29	PANEL ASSEMBLY-SIDEWALL UPPER FRONT LH	1	L
	0700105-125	PANEL ASSEMBLY-SIDEWALL UPPER FRONT LH	1	M
	0713513-2	PANEL ASSEMBLY-SIDEWALL UPPER FRONT LH	1	AB
	0713520-1	PANEL ASSEMBLY-SIDEWALL UPPER FRONT LH	1	AC
- 11	0700105-30	PANEL ASSEMBLY-SIDEWALL UPPER FRONT RH	1	L
	0700105-126	PANEL ASSEMBLY-SIDEWALL UPPER FRONT RH	1	M
	0713513-1	PANEL ASSEMBLY-SIDEWALL UPPER FRONT RH	1	AB
	0713520-2	PANEL ASSEMBLY-SIDEWALL UPPER FRONT RH	1	AC
		ATTACHING PARTS		
	S-1021Z-8-6B	SCREW CESSNA STANDARD	AR	
		---*---		
	0411030-4	ASH RECEIVER	1	J
		ATTACHING PARTS		
	S-1021Z-4-8	SCREW CESSNA STANDARD	2	
	NAS446-1-3	NUT TIN A1776-4Z-3	2	
		---*---		
- 12	0411730	CHANNEL-UPHOLSTERY RETAINER	2	E
		ATTACHING PARTS		
	S-1023A-4-6C	SCREW CESSNA STANDARD	5	
	S-1066C1	WASHER-----CESSNA STANDARD	5	
		---*---		
	0511297	CHANNEL-UPHOLSTERY RETAINER	2	D
		ATTACHING PARTS		
	S-1023A-4-6C	SCREW CESSNA STANDARD	5	
		---*---		
- 13	0511152	FAIRING-CORNER	2	E
		ATTACHING PARTS		
	S-1021Z-6-6	SCREW CESSNA STANDARD	2	
		---*---		

180-182 ALL SERIALS

CONTINUED ON PAGES 133, 134, 135, & 136

Upholstery (Cont)

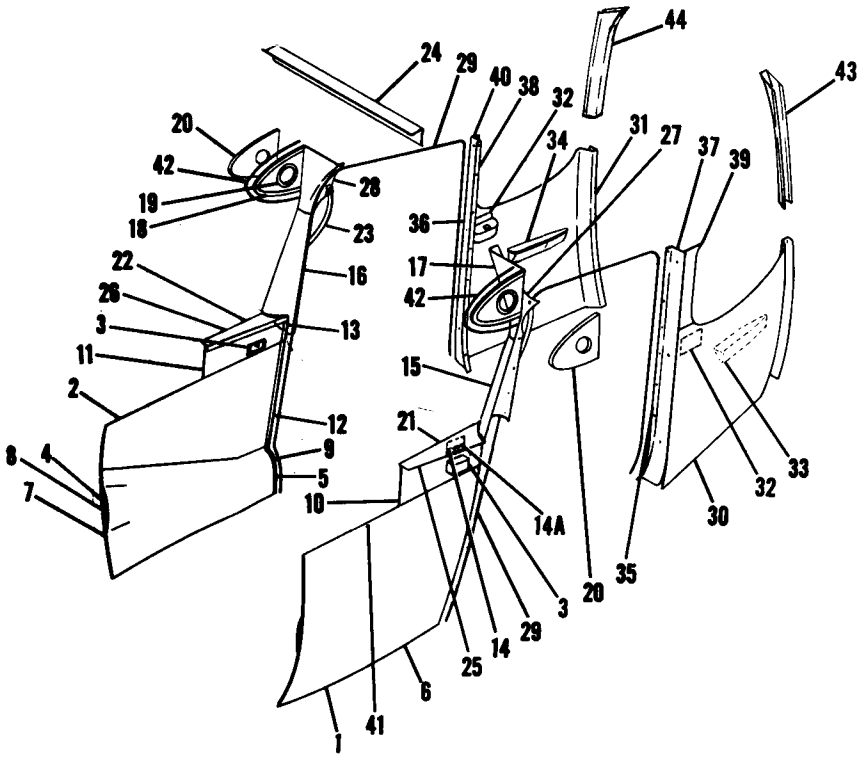

180-182 ALL SERIALS

Figure 53. Cabin Side Panels Upholstery Installation

FIGURE AND INDEX NO.	PART NUMBER	DESCRIPTION 1 2 3 4 5 6 7	UNITS PER ASSY	USABLE ON CODE
53- 14	0713207-1	PLACARD-OPERATIONAL LIMITATIONS	1	AN
	0713207-2	PLACARD-OPERATIONAL LIMITATIONS	1	AO
-14A	0700319-13	PLACARD-WINTERIZATION INFORMATION	1	
- 15	0511137-7	COVER-LEFT DOOR POST UPPER	1	E
	0511137-17	COVER-LEFT DOOR POST UPPER	1	D
	0711110-5	COVER-LEFT DOOR POST UPPER	1	K
	0711110-1	COVER-LEFT DOOR POST UPPER---- FOR MAP LIGHT SWITCH	1	K
	0713210-4	PLACARD-MAP LIGHT	1	
- 16	0511137-10	COVER-RIGHT DOOR POST UPPER	1	E
	0511137-16	COVER-RIGHT DOOR POST UPPER	1	D
	0711110-2	COVER-RIGHT DOOR POST UPPER	1	K
		ATTACHING PARTS		
	S-1021A-4-6	SCREW CESSNA STANDARD	3	
		---*---		

CONTINUED ON PAGES 134, 135, & 136

FIGURE AND INDEX NO.	PART NUMBER	DESCRIPTION 1 2 3 4 5 6 7	UNITS PER ASSY	USABLE ON CODE
53- 17	0511311-3	SHIELD-LEFT DOOR POST UPPER	1	AP
	0711133-11	SHIELD-LEFT DOOR POST UPPER	1	AQ
- 18	0511311-4	SHIELD-RIGHT DOOR POST UPPER	1	AP
	0711133-2	SHIELD-RIGHT DOOR POST UPPER	1	AQ
		ATTACHING PARTS		
	S-1021A-4-6	SCREW CESSNA STANDARD	4	
		---*---		
- 19	0413235	GROMMET-SHIELD	2	
- 20	0511001-133	SOUNDPROOFING-SHIELD	2	
- 21	0700100-11	FAIRING ASSEMBLY-LH	1	E
- 22	0700100-12	FAIRING ASSEMBLY-RH	1	E
		ATTACHING PARTS		
	S-1021Z-6-6	SCREW CESSNA STANDARD	2	
		---*---		
- 23	0511001-129	STRAP-ASSIST	2	E
	0511229-1	STRAP-ASSIST	2	AK
	0511229-2	STRAP-ASSIST	2	AJ
		ATTACHING PARTS		
	1032X5/8	SCREW AU-VE-CO T5/8	2	
		---*---		
- 24	0511130	SHIELD-FRONT SPAR	1	
		ATTACHING PARTS		
	49265F938	STUD UC	3	
		---*---		
- 25		CHANNEL-UPHOLSTERY LH-----USE 0700105-285 & TRIM TO FIT----	1	Z
	0700105-285	CHANNEL-UPHOLSTERY LH	1	AA
- 26		CHANNEL-UPHOLSTERY RH-----USE 0700105-286 & TRIM TO FIT----	1	Z
	0700105-286	CHANNEL-UPHOLSTERY RH	1	AA
- 27	0700105-33	GUSSET-UPHOLSTERY LH	1	AL
	0700105-423	GUSSET-UPHOLSTERY LH	1	AM
- 28	0700105-34	GUSSET-UPHOLSTERY RH	1	AL
	0700105-424	GUSSET-UPHOLSTERY RH	1	AM
- 29	0700100-195	WINDLACE ASSEMBLY-UPHOLSTERY	2	A
	0700101-15	WINDLACE ASSEMBLY-UPHOLSTERY	2	Q
	0700105-215	WINDLACE ASSEMBLY-UPHOLSTERY	2	J
		ATTACHING PARTS		
	S-1021Z-4-4	SCREW CESSNA STANDARD	AR	
		---*---		
- 30	0700100-5	PANEL ASSEMBLY-AFT LH	1	A
	0700101-5	PANEL ASSEMBLY-AFT LH	1	B
	0700102-5	PANEL ASSEMBLY-AFT LH	1	C
	0700103-5	PANEL ASSEMBLY-AFT LH	1	D
	0700105-5	PANEL ASSEMBLY-AFT LH	1	G
	0700105-49	PANEL ASSEMBLY-AFT LH	1	H
	0700105-249	PANEL ASSEMBLY-AFT LH	1	AE
	0700105-349	PANEL ASSEMBLY-AFT LH	1	AF
	0700105-439	PANEL ASSEMBLY-AFT LH	1	AQ
	0770011-11	PANEL ASSEMBLY-AFT LH-----USED WITH TACTAIR INSTALLATION	1	AS
	0700105-39	BRACKET-ASH RECEIVER	1	AG
- 31	0700100-6	PANEL ASSEMBLY-AFT RH	1	A
	0700101-6	PANEL ASSEMBLY-AFT RH	1	B
	0700102-6	PANEL ASSEMBLY-AFT RH	1	C
	0700103-6	PANEL ASSEMBLY-AFT RH	1	D
	0700105-6	PANEL ASSEMBLY-AFT RH	1	G
	0700105-50	PANEL ASSEMBLY-AFT RH	1	H
	0700105-250	PANEL ASSEMBLY-AFT RH	1	AE
	0700105-350	PANEL ASSEMBLY-AFT RH	1	AF
	0700105-440	PANEL ASSEMBLY-AFT RH	1	AQ
	0770011-10	PANEL ASSEMBLY-AFT RH-----USED WITH TACTAIR INSTALLATION	1	AS
	0700105-40	BRACKET-ASH RECEIVER	1	AG

CONTINUED ON PAGES 135 & 136

FIGURE AND INDEX NO.	PART NUMBER	DESCRIPTION 1 2 3 4 5 6 7	UNITS PER ASSY	USABLE ON CODE
53- 32	1A1002X	TRAY-ASH RECEPTACLE	2	K
- 33	0700100-29	ARM REST ASSEMBLY-LH	1	A
	0700101-29	ARM REST ASSEMBLY-LH	1	R
	0700103-122	ARM REST ASSEMBLY-LH	1	D
	0700105-23	ARM REST ASSEMBLY-LH	1	G
	0700105-55	ARM REST ASSEMBLY-LH	1	H
	0700105-255	ARM REST ASSEMBLY-LH	1	J
- 34	0700100-30	ARM REST ASSEMBLY-RH	1	A
	0700101-30	ARM REST ASSEMBLY-RH	1	R
	0700103-123	ARM REST ASSEMBLY-RH	1	D
	0700105-22	ARM REST ASSEMBLY-RH	1	G
	0700105-58	ARM REST ASSEMBLY-RH	1	H
	0700105-258	ARM REST ASSEMBLY-RH	1	J
		ATTACHING PARTS		
	S-1021Z-8-8	SCREW CESSNA STANDARD	3	
	NAS395-12-3	NUT TIN A1786-8Z-3	3	
		---*---		
	C-6861	ASH RECEIVER CDR	2	F
		ATTACHING PARTS		
	S-1021Z-8-8	SCREW CESSNA STANDARD	2	
	NAS395-12-3	NUT TIN A1786-8Z-3	2	
		---*---		
- 35	0511177	FAIRING-REAR DOOR POST LH	1	S
	0511177-4	FAIRING-REAR DOOR POST LH	1	T
	0511177-5	FAIRING-REAR DOOR POST LH	1	V
	0511177-8	FAIRING-REAR DOOR POST LH	1	V
	0770011-13	FAIRING-REAR DOOR POST LH ----USED WITH TACTAIR INSTALLATION	1	P
	0770011-15	FAIRING-REAR DOOR POST LH ----USED WITH TACTAIR INSTALLATION	1	X
- 36	0511177-1	FAIRING-REAR DOOR POST RH	1	S
	0511177-2	FAIRING-REAR DOOR POST RH	1	T
	0511177-6	FAIRING-REAR DOOR POST RH	1	U
	0511177-7	FAIRING-REAR DOOR POST RH	1	V
	0770011-12	FAIRING-REAR DOOR POST RH ----USED WITH TACTAIR INSTALLATION	1	P
	0770011-14	FAIRING REAR DOOR POST RH ----USED WITH TACTAIR INSTALLATION	1	X
- 37	0700105-37	FAIRING-UPPER REAR DOORPOST LH	1	AK
	1200084-7	FAIRING-UPPER REAR DOORPOST LH	1	AJ
- 38	0700105-38	FAIRING-UPPER REAR DOORPOST RH	1	AK
	1200084-6	FAIRING-UPPER REAR DOORPOST RH	1	AJ
		ATTACHING PARTS		
	S-1021Z-6-6	SCREW CESSNA STANDARD	AR	
		---*---		
- 39	0700105-45	PANEL ASSEMBLY-UPPER AFT LH	1	W
	0700105-245	PANEL ASSEMBLY-UPPER AFT LH	1	AH
- 40	0700105-46	PANEL ASSEMBLY-UPPER AFT RH	1	W
	0700105-246	PANEL ASSEMBLY-UPPER AFT RH	1	AH
- 41	0511018	HOOK-EARPHONE	1	E
		ATTACHING PARTS		
	S-1021Z-6-6	SCREW CESSNA STANDARD	2	
	NAS446-3-3	NUT TIN A1777-6Z-3	2	
		---*---		
- 42	S-202RB	CHANNEL-RUBBER CESSNA STANDARD	AR	Y
- 43	0700110-3	FAIRING-STA 90 BULKHEAD	1	AF
- 44	0700110-4	FAIRING-STA 90 BULKHEAD	1	AF

A---180 SERIAL 30000 THRU 30639
B---180 SERIAL 30640 THRU 31260
C---180 SERIAL 31261 THRU 32150
D---180 SERIAL 32151 THRU 32661
182 SERIAL 33000 THRU 33842
E---180 SERIAL 30000 THRU 32150
F---180 SERIAL 30000 THRU 32661
182 SERIAL 33000 THRU 33842
G---180 SERIAL 32662 THRU 50105
182 SERIAL 33843 THRU 34753
H---180 SERIAL 50106 THRU 50355
182 SERIAL 34754 THRU 51556

CONTINUED ON PAGE 136

FIGURE AND INDEX NO.	PART NUMBER	DESCRIPTION 1 2 3 4 5 6 7	UNITS PER ASSY	USABLE ON CODE
53-		J---180 SERIAL 50356 & ON 182 SERIAL 51557 & ON K---180 SERIAL 32662 & ON 182 SERIAL 33843 & ON L---180 SERIAL 32662 THRU 50355 182 SERIAL 33843 THRU 51556 M---182 SKYLANE SERIAL 34754 THRU 51556 N---180 SERIAL 32662 THRU 50355 182 SERIAL 33843 & ON P---180 SERIAL 50356 & ON Q---180 SERIAL 30640 THRU 50355 182 SERIAL 33000 THRU 51556 R---180 SERIAL 30640 THRU 32150 S---180 SERIAL 30000 THRU 32661 T---182 SERIAL 33000 THRU 33842 U---180 SERIAL 32662 & ON V---182 SERIAL 33843 & ON W---180 SERIAL 32662 THRU 50355 182 SERIAL 33843 THRU 51556 X---182 SERIAL 51557 & ON Y---180 SERIAL 30000 THRU 50325 182 SERIAL 33000 THRU 51476 Z---180 SERIAL 32662 THRU 50467 182 SERIAL 33843 THRU 51903 AA--180 SERIAL 50468 & ON 182 SERIAL 51904 & ON AB--180 SERIAL 50356 THRU 50661 182 SERIAL 51557 THRU 52358 AC--180 SERIAL 50662 THRU 18051063 182 SERIAL 52359 & ON AE--180 SERIAL 50356 & ON 182 SERIAL 51557 THRU 52358 AF--182 SERIAL 52359 & ON AG--180 SERIAL 32662 THRU 50661 182 SERIAL 33843 THRU 52358 AH--180 SERIAL 50356 THRU 50911 182 SERIAL 51557 THRU 53007 AJ--180 SERIAL 18050912 & ON 182 SERIAL 18253008 & ON AK--180 SERIAL 32662 THRU 50911 182 SERIAL 33843 THRU 53007 AL--180 SERIAL 32662 THRU 18051019 182 SERIAL 33843 THRU 18253339 AM--180 SERIAL 18051020 & ON 182 SERIAL 18253340 & ON AN--180 SERIAL 50662 & ON 182 SERIAL 51557 & ON AO--180 SERIAL 50356 THRU 50661 AP--180 SERIAL 30000 THRU 18051063 182 SERIAL 33000 & ON AQ--180 SERIAL 18051064 & ON AR--180 SERIAL 50356 THRU 18051063 182 SERIAL 51557 & ON AS--180 SERIAL 50356 THRU 18051016 182 SERIAL 51557 THRU 18553512 NOTE• FOR ACCESSORY KIT LISTING REFER TO PAGES 372 THRU 374B		

This page intentionally left blank.

Front Seat

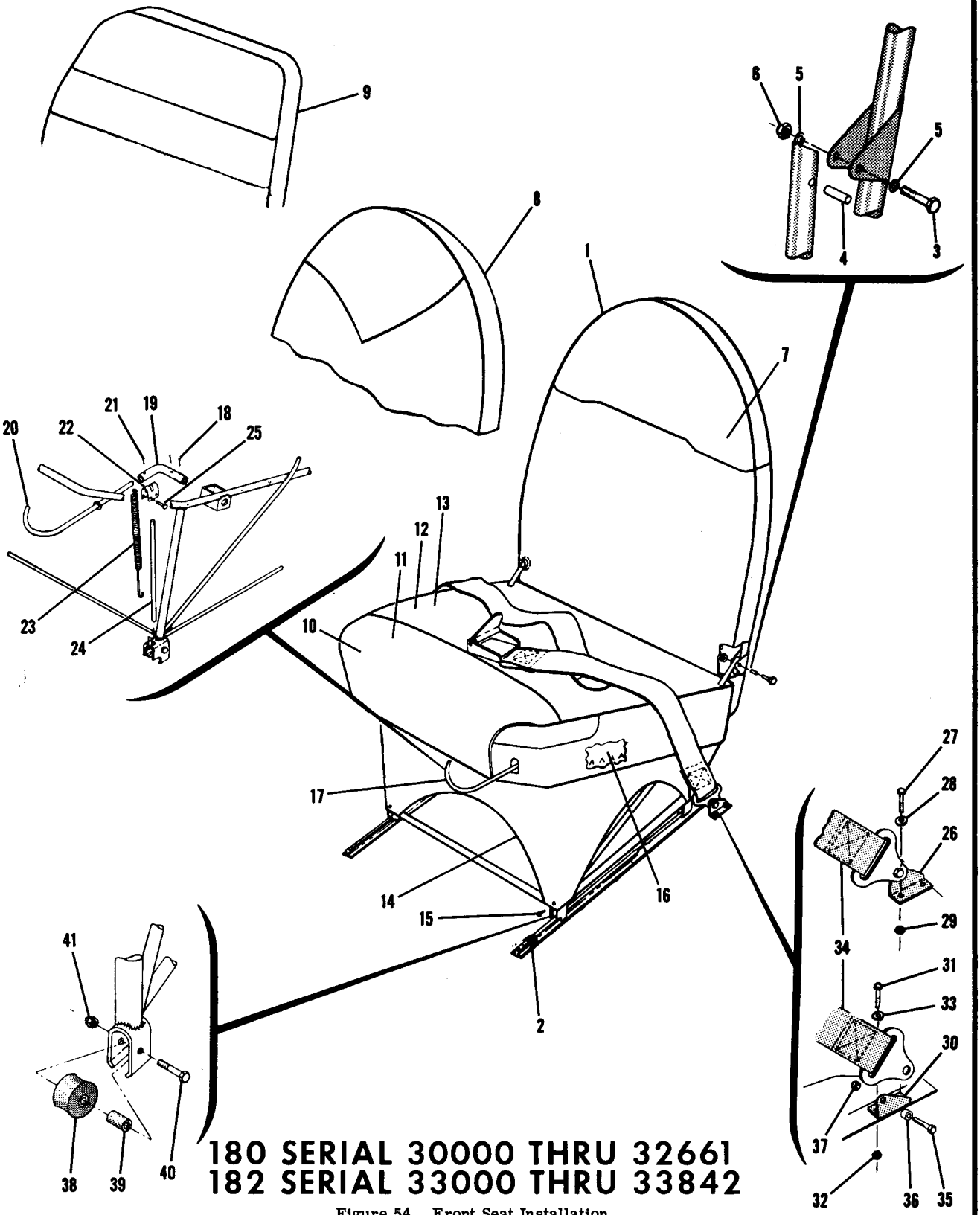

Figure 54. Front Seat Installation

FIGURE AND INDEX NO.	PART NUMBER	DESCRIPTION 1 2 3 4 5 6 7	UNITS PER ASSY	USABLE ON CODE
54-		SEAT INSTALLATION-FRONT	NP	A
- 1	0700100-43	SEAT ASSEMBLY-FRONT ---------- 180 SERIAL ----------	2	B
	0700101-43	SEAT ASSEMBLY-FRONT LH ---- 30000 THRU 32661 ----	1	D
	0700102-43	SEAT ASSEMBLY-FRONT LH	1	E
	0700101-16	SEAT ASSEMBLY-FRONT RH	1	D
	0700102-16	SEAT ASSEMBLY-FRONT RH ---- 182 SERIAL ----	1	E
	0700103-77	SEAT ASSEMBLY-FRONT LH	1	F
	0700103-78	SEAT ASSEMBLY-FRONT RH 33000 THRU 33842	1	F
		ATTACHING PARTS		
- 2	0713074-1	STOP-SEAT	2	
	MS24665-148	PIN-COTTER	2	
	MS20392-1-21	PIN-CLEVIS	2	
		---*---		
	0700100-98	BACK ASSEMBLY-FRONT SEAT---- UPHOLSTERED	1	B
	0700101-17	BACK ASSEMBLY-FRONT SEAT---- UPHOLSTERED LH	1	D
	0700102-17	BACK ASSEMBLY-FRONT SEAT---- UPHOLSTERED LH	1	G
	0700101-98	BACK ASSEMBLY-FRONT SEAT---- UPHOLSTERED RH	1	D
	0700102-98	BACK ASSEMBLY-FRONT SEAT---- UPHOLSTERED RH	1	E
	0700103-85	BACK ASSEMBLY-FRONT SEAT---- UPHOLSTERED LH	1	F
	0700103-86	BACK ASSEMBLY-FRONT SEAT---- UPHOLSTERED RH	1	F
		ATTACHING PARTS		
- 3	AN3-5A	BOLT	2	J
	AN4-12A	BOLT	2	K
- 4	0511301-20	BUSHING	2	J
- 5	AN960-10	WASHER	4	
- 6	MS20365-428C	NUT	2	
		---*---		
- 7	0700100-105	COVER ASSEMBLY-FRONT SEAT BACK	1	B
	0700101-105	COVER ASSEMBLY-FRONT SEAT BACK LH	1	D
	0700102-105	COVER ASSEMBLY-FRONT SEAT BACK LH	1	G
- 8	0700101-18	COVER ASSEMBLY-FRONT SEAT BACK RH	1	D
	0700102-18	COVER ASSEMBLY-FRONT SEAT BACK RH	1	E
- 9	0700103-124	COVER ASSEMBLY-FRONT SEAT BACK RH	1	F
	0700103-125	COVER ASSEMBLY-FRONT SEAT BACK LH	1	F
- 10	0700100-100	CUSHION ASSEMBLY-FRONT SEAT UPHOLSTERED	1	B
	0700101-100	CUSHION ASSEMBLY-FRONT SEAT UPHOLSTERED	1	D
- 11	0700103-84	CUSHION ASSEMBLY-FRONT SEAT UPHOLSTERED	1	L
- 12	0700100-101	COVER ASSEMBLY-FRONT SEAT BOTTOM	1	B
	0700101-101	COVER ASSEMBLY-FRONT SEAT BOTTOM	1	D
	0700102-101	COVER ASSEMBLY-FRONT SEAT BOTTOM	1	E
- 13	0700103-115	COVER ASSEMBLY-FRONT SEAT BOTTOM	1	F
- 14	0511173	SKIRT-FRONT SEAT	1	
		ATTACHING PARTS		
- 15	S-1021Z-6-4	SCREW CESSNA STANDARD	4	
		---*---		
- 16	0511172	RETAINER-SEAT BOTTOM UPHOLSTERY	1	
		ATTACHING PARTS		
	S-1021Z-6-4	SCREW CESSNA STANDARD	11	
		---*---		
- 17	0511301-166	HANDLE ASSEMBLY-FRONT SEAT ADJUSTMENT	1	
		ATTACHING PARTS		
- 18	MS24665-351	PIN-COTTER	2	
		---*---		
- 19	0511184	ATTACHMENT-SEAT HANDLE	1	
- 20	0511301-120	HANDLE-FRONT SEAT ADJUSTMENT	1	
		ATTACHING PARTS		
- 21	MS24665-351	PIN-COTTER	1	
		---*---		
- 22	0311644	CLEVIS-FRONT SEAT ADJUSTMENT	1	
- 23	0310196-2	SPRING-COIL	1	
- 24	0311311-1	ROD-FRONT SEAT ADJUSTMENT	1	
		ATTACHING PARTS		
- 25	MS20392-1-15	PIN-CLEVIS	1	
		---*---		

CONTINUED ON PAGE 140

FIGURE AND INDEX NO.	PART NUMBER	DESCRIPTION 1 2 3 4 5 6 7	UNITS PER ASSY	USABLE ON CODE
54- 26	0511301-19	BRACKET-SAFETY BELT ATTACHMENT-----LH OUTBD & RH INBD ----	2	
		ATTACHING PARTS		
- 27	AN3-5A	BOLT ----------	2	
- 28	AN960-10	WASHER-----ON FWD BOLT ONLY ----------	1	
- 29	MS20365-1032C	NUT ----------	2	
		---*---		
- 30	0511301-18	BRACKET-SAFETY BELT ATTACHMENT-----RH OUTBD & LH INBD ----	2	
		ATTACHING PARTS		
- 31	AN3-4A	BOLT ----------	2	
- 32	MS20365-1032C	NUT ----------	2	
- 33	AN960-10	WASHER-----ON FWD BOLT ONLY ----------	1	
		---*---		
- 34	0311710-7	BELT ASSEMBLY-SAFETY WHEN EXHAUSTED USE S-1060-9 TAN	1	C
	S-1060-9	BELT ASSEMBLY-SAFETY CESSNA STANDARD-----TAN ----------	1	C
	0311710-9	BELT ASSEMBLY-SAFETY WHEN EXHAUSTED USE ----------	1	F
		S-1060-12 GRAY		
	S-1060-12	BELT ASSEMBLY-SAFETY CESSNA STANDARD-----GRAY ----------	1	F
		ATTACHING PARTS		
- 35	AN4-6A	BOLT ----------	1	
- 36	NAS43-4-20	SPACER----------	1	
- 37	MS20365-428C	NUT ----------	1	
		---*---		
- 38	0311310	ROLLER-SEAT----------	4	
		ATTACHING PARTS		
- 39	0311586	BUSHING-SEAT ROLLER ----------	1	
- 40	AN3-11A	BOLT ----------	1	
- 41	MS20365-1032C	NUT ----------	1	
		---*---		

A---180 SERIAL 30000 THRU 32661
182 SERIAL 33000 THRU 33842
B---180 SERIAL 30000 THRU 30639
C---180 SERIAL 30000 THRU 32150
D---180 SERIAL 30640 THRU 31260
E---180 SERIAL 31261 THRU 32150
F---180 SERIAL 32151 THRU 32661
182 SERIAL 33000 THRU 33842
G---180 SERIAL 31261 THRU 32661
H---180 SERIAL 30000 THRU 31260
J---180 SERIAL 30000 THRU 32661
K---182 SERIAL 33000 THRU 33842
L---180 SERIAL 31261 THRU 32150
182 SERIAL 33000 THRU 33842

FIGURE AND INDEX NO.	PART NUMBER	DESCRIPTION 1 2 3 4 5 6 7	UNITS PER ASSY	USABLE ON CODE
55-		SEAT INSTALLATION-FRONT	NP	A
- 1	0700105-7	SEAT ASSEMBLY-FRONT — 180 SERIAL	1	B
	0700105-69	SEAT ASSEMBLY-FRONT — 32662 & ON	1	C
	0700105-269	SEAT ASSEMBLY-FRONT	1	D
	0700105-370	SEAT ASSEMBLY-FRONT DELUXE	1	E
	0700105-408	SEAT ASSEMBLY-FRONT UTILITY — 182 SERIAL	1	M
		ATTACHING PARTS — 33843 & ON		
- 2	0713074-1	STOP-SEAT	2	
	MS24665-148	PIN-COTTER	2	
	MS20392-1-21	PIN-CLEVIS	2	
		---*---		
- 3	0700105-12	BACK ASSEMBLY-FRONT SEAT UPHOLSTERED	1	B
	0700105-60	BACK ASSEMBLY-FRONT SEAT UPHOLSTERED	1	C
	0700105-260	BACK ASSEMBLY-FRONT SEAT UPHOLSTERED	1	D
	0700105-361	BACK ASSEMBLY-FRONT SEAT UPHOLSTERED DELUXE	1	E
	0700105-413	BACK ASSEMBLY-FRONT SEAT UPHOLSTERED UTILITY	1	M
		ATTACHING PARTS		
- 4	AN4-13A	BOLT	2	
		---*---		
- 5	0700105-20	COVER ASSEMBLY-SEAT BACK DELUXE	1	
	0700105-415	COVER ASSEMBLY-SEAT BACK UTILITY	1	M
- 6	0700105-17	CUSHION ASSEMBLY-FRONT SEAT UPHOLSTERED	1	B
	0700105-59	CUSHION ASSEMBLY-FRONT SEAT UPHOLSTERED	1	C
	0700105-259	CUSHION ASSEMBLY-FRONT SEAT UPHOLSTERED	1	D
	0700105-359	CUSHION ASSEMBLY-FRONT SEAT UPHOLSTERED DELUXE	1	E
	0700105-414	CUSHION ASSEMBLY-FRONT SEAT UPHOLSTERED UTILITY	1	M
- 7	0700105-21	COVER ASSEMBLY-FRONT SEAT BOTTOM DELUXE	1	
	0700105-416	COVER ASSEMBLY-FRONT SEAT BOTTOM UTILITY	1	M
- 8	0711030-20	TUBE-SEAT HANDLE	1	K
	0710316-1	TUBE-SEAT HANDLE	1	L
		ATTACHING PARTS		
- 9	MS20392-2-31	PIN-FLATHEAD	1	
- 10	MS24665-134	PIN-COTTER	1	
		---*---		
- 11	0311644	CLEVIS	1	
- 12	0711031-1	TUBE-SEAT LOCK	1	K
	0710304-2	TUBE-SEAT LOCK	1	L
		ATTACHING PARTS		
- 13	MS24665-285	PIN-COTTER	1	
- 14	MS20392-1-15	PIN-FLATHEAD	1	
- 15	MS24665-134	PIN-COTTER	1	
-15A	MS24665-130	PIN-COTTER	1	K
	MS24665-132	PIN-COTTER	1	L
		---*---		
- 16	0310196-2	SPRING-SEAT HANDLE	1	
- 17	NAS682A4	NUT EN	2	
- 18	0700106-1	KNOB-SEAT HANDLE	1	
		ATTACHING PARTS		
- 19	S10212-6-8	SCREW CESSNA STANDARD	1	
		---*---		
- 20	0511301-19	BRACKET-SAFETY BELT ATTACHMENT-----LH OUTBD & RH INBD	2	
		ATTACHING PARTS		
- 21	AN3-5A	BOLT	2	
- 22	AN960-10	WASHER-----ON FWD BOLT ONLY	1	
- 23	MS20365-1032C	NUT	2	
		---*---		
- 24	0511301-18	BRACKET-SAFETY BELT ATTACHMENT-----RH OUTBD & LH INBD	2	
		ATTACHING PARTS		
- 25	AN3-4A	BOLT	2	
- 26	MS20365-1032C	NUT	2	
- 27	AN960-10	WASHER-----FWD BOLT ONLY	1	
		---*---		

CONTINUED ON PAGES 142 & 143

Front Seat (Cont)

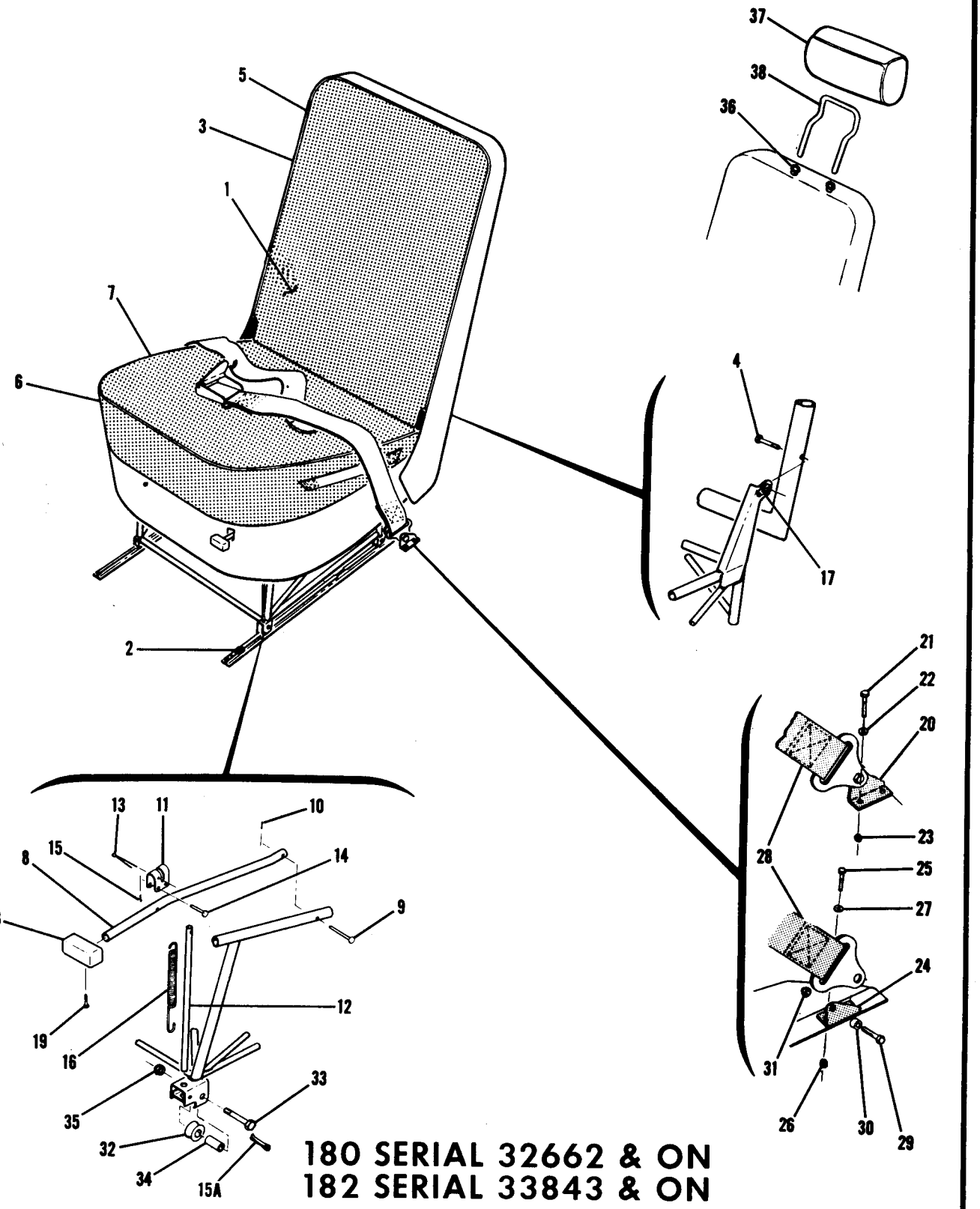

180 SERIAL 32662 & ON
182 SERIAL 33843 & ON

Figure 55. Front Seat Installation

FIGURE AND INDEX NO.	PART NUMBER	DESCRIPTION 1 2 3 4 5 6 7	UNITS PER ASSY	USABLE ON CODE
55- 28	0711710-11	BELT ASSEMBLY-SAFETY WHEN EXHAUSTED USE S-1060-3 BLK	1	F
	S-1060-3	BELT ASSEMBLY-SAFETY CESSNA STANDARD BLACK	1	G
	0711710-16	BELT ASSEMBLY-SAFETY WHEN EXHAUSTED USE S-1060-4 GLD	1	H
	S-1060-4	BELT ASSEMBLY-SAFETY CESSNA STANDARD GOLD	1	J
	S-1060-15	BELT ASSEMBLY-SAFETY BEIGE-----CESSNA STANDARD	2	M
		ATTACHING PARTS		
- 29	AN4-6A	BOLT	1	
- 30	NAS43-4-20	SPACER	1	
- 31	MS20365-428C	NUT	1	
		---*---		
- 32	0311310	ROLLER-SEAT	4	
		ATTACHING PARTS		
- 33	AN3-11A	BOLT	1	
- 34	0311586	BUSHING	1	
- 35	MS20365-1032C	NUT	1	
		---*---		
- 36	0700320-1	RETAINER-HEADREST	2	E
- 37	0800023-3	HEADREST ASSEMBLY	1	E
- 38	1200108-1	FRAME-HEADREST	1	E

A---180 SERIAL 32662 & ON
182 SERIAL 33843 & ON
B---180 SERIAL 32662 THRU 50105
182 SERIAL 33843 THRU 34753
C---180 SERIAL 50106 THRU 50355
182 SERIAL 34754 THRU 51556
D---180 SERIAL 50356 THRU 50661
182 SERIAL 51557 THRU 52358
E---180 SERIAL 50662 & ON
182 SERIAL 52359 & ON
F---180 SERIAL 32662 THRU 50664
182 SERIAL 33843 THRU 52358
G---180 SERIAL 50665 & ON
182 SERIAL 33843 THRU 52358
H---182 SERIAL 52359 THRU 52438
J---182 SERIAL 52359 & ON
K---180 SERIAL 32662 THRU 50911
182 SERIAL 33843 THRU 53007
L---180 SERIAL 18050912 & ON
182 SERIAL 18253008 & ON
M---180 SERIAL 18051064 & ON

Front Seat (Cont)

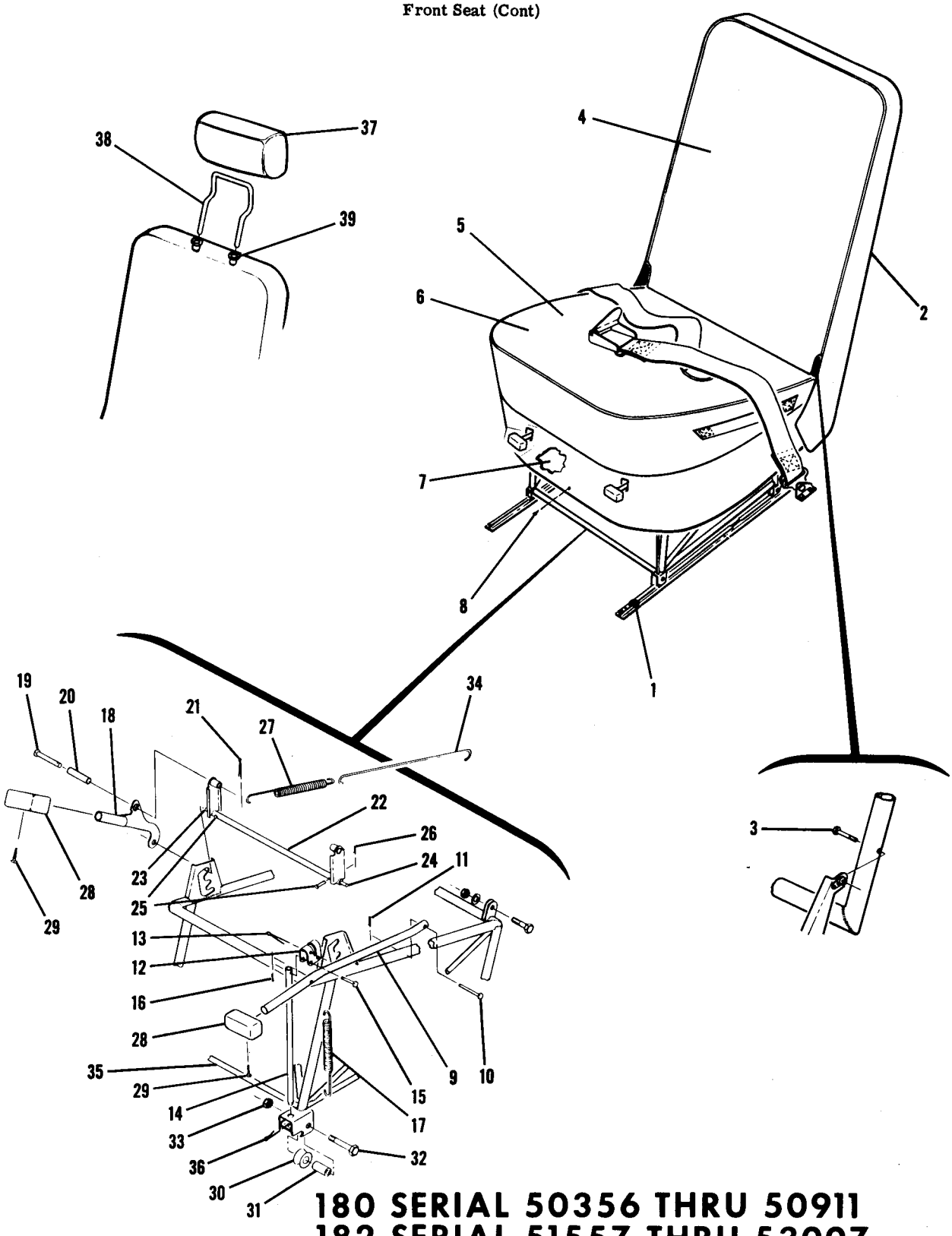

180 SERIAL 50356 THRU 50911
182 SERIAL 51557 THRU 53007

Figure 56. Tilting Front Seat Installation

FIGURE AND INDEX NO.	PART NUMBER	DESCRIPTION 1 2 3 4 5 6 7	UNITS PER ASSY	USABLE ON CODE
56-		TILTING FRONT SEAT INSTALLATION	NP	A
	0700105-208	SEAT ASSEMBLY-TILTING FRONT --180 SERIAL	1	C
	0700105-309	SEAT ASSEMBLY-TILTING FRONT --180 SERIAL 50356 THRU 50911	1	B
		ATTACHING PARTS		
- 1	0713074-1	STOP-SEAT --182 SERIAL 51557 THRU 53007	2	
	MS24665-148	PIN-COTTER	2	
	MS20392-1-21	PIN-CLEVIS	2	
		---*---		
- 2	0700105-260	BACK ASSEMBLY-UPHOLSTERED	1	C
	0700105-361	BACK ASSEMBLY-UPHOLSTERED	1	B
		ATTACHING PARTS		
- 3	AN4-13A	BOLT	2	
		---*---		
- 4	0700105-20	COVER ASSEMBLY-SEAT BACK	1	
- 5	0700105-284	CUSHION ASSEMBLY-UPHOLSTERED	1	C
	0700105-384	CUSHION ASSEMBLY-UPHOLSTERED	1	B
- 6	0700105-209	COVER ASSEMBLY-SEAT BOTTOM	1	
- 7	0700105-210	SKIRT	1	C
	1200104-1	SKIRT	1	B
		ATTACHING PARTS		
- 8	S-1021Z-4-6	SCREW CESSNA STANDARD	11	
		---*---		
- 9	0711048-1	HANDLE-LATCH	1	
		ATTACHING PARTS		
- 10	MS20392-2-31	PIN-FLATHEAD	1	
- 11	MS24665-132	PIN-COTTER	1	
		---*---		
- 12	0311644	CLEVIS	1	
		ATTACHING PARTS		
- 13	MS24665-285	PIN-COTTER	1	
		---*---		
- 14	0311311	PIN-LATCH	1	
		ATTACHING PARTS		
- 15	MS20392-1-15	PIN-FLATHEAD	1	
- 16	MS24665-132	PIN-COTTER	1	
		---*---		
- 17	0310196-2	SPRING	1	
- 18	0711056-1	ARM ASSEMBLY	1	
		ATTACHING PARTS		
- 19	MS20392-3-41	PIN-FLATHEAD	1	
- 20	NAS43-4-14	SPACER	1	
- 21	MS24665-132	PIN-COTTER	1	
		---*---		
- 22	0812200-106	ACTUATOR ASSEMBLY	1	
- 23	0711058-1	PIN RH	1	
- 24	0812200-49	PIN LH	1	
		ATTACHING PARTS		
- 25	MS20392-1-13	PIN-FLATHEAD	1	
- 26	MS24665-130	PIN-COTTER	1	
		---*---		
- 27	0310196-4	SPRING	2	
- 28	0700106-1	KNOB	2	
		ATTACHING PARTS		
- 29	S-1021Z-6-8	SCREW CESSNA STANDARD	1	
		---*---		
- 30	0311310	ROLLER-SEAT	4	
		ATTACHING PARTS		
- 31	0311586	BUSHING	1	
- 32	AN3-11A	BOLT	1	
- 33	MS20365-1032C	NUT	1	
		---*---		
- 34	0711049-1	LINK-SPRING	2	
- 35	0711042-1	FRAME ASSEMBLY-TILTING FRONT SEAT BASE	1	
- 36	MS24665-130	PIN-COTTER UP-STOP	1	
- 37	0800023-3	HEADREST ASSEMBLY	1	B
- 38	1200108-1	FRAME-HEADREST	1	B
- 39	0700320-1	RETAINER-HEADREST	2	B

A---180 SERIAL 50356 THRU 50911
182 SERIAL 51557 THRU 53007
B---180 SERIAL 50662 THRU 50911
182 SERIAL 52359 THRU 53007
C---180 SERIAL 50356 THRU 50661
182 SERIAL 51557 THRU 52358
NOTE• FOR ACCESSORY KIT LISTINGS REFER TO PAGES 372 THRU 374B

Front Seat (Cont)

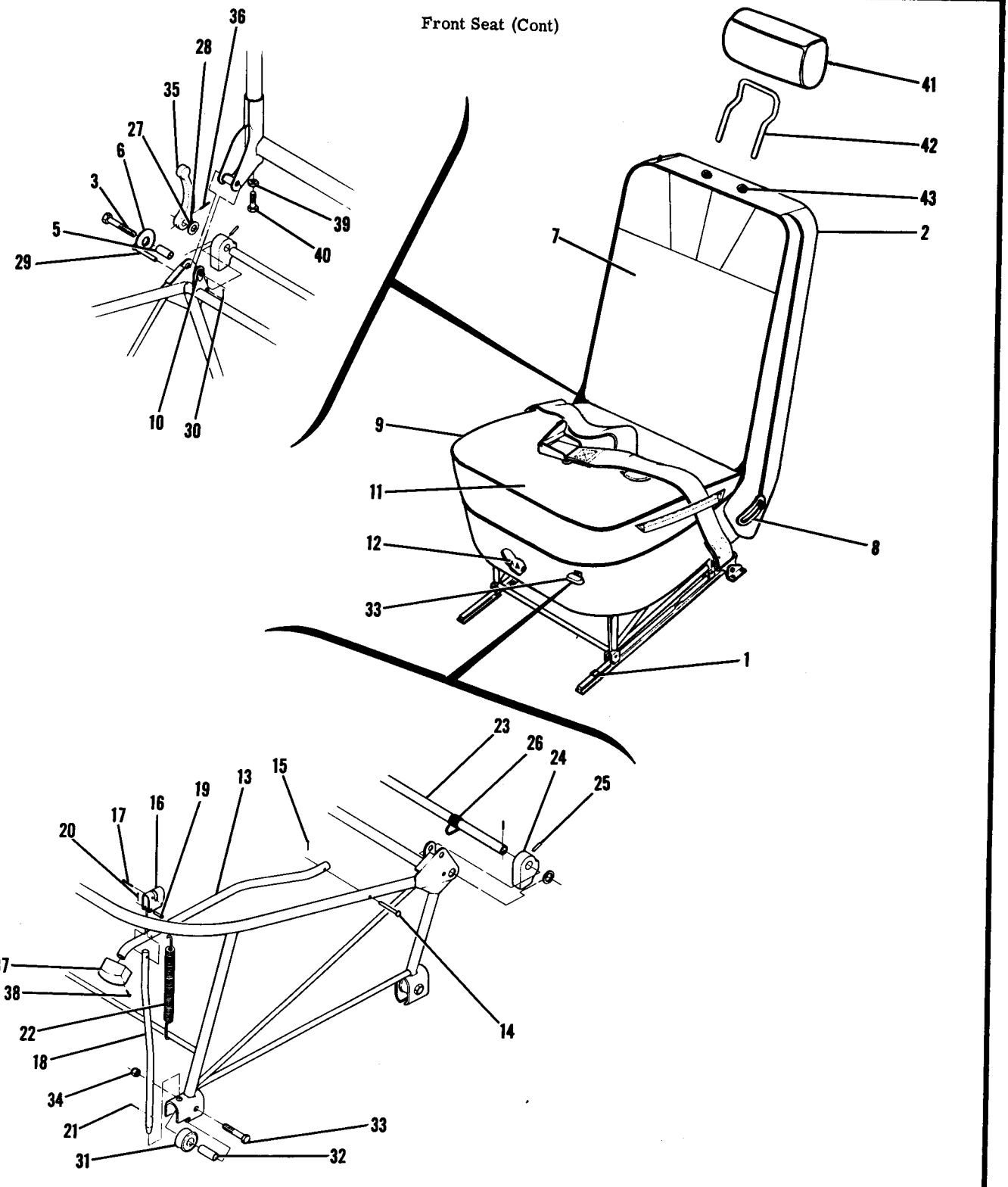

180 SERIAL 18050912 & ON
182 SERIAL 18253008 & ON

Figure 56A. Reclining Front Seat

FIGURE AND INDEX NO.	PART NUMBER	DESCRIPTION	UNITS PER ASSY	USABLE ON CODE
		1 2 3 4 5 6 7		
56A-		RECLINING BACK FRONT SEAT INSTALLATION	NP	A
	0700105-385	SEAT ASSEMBLY-RECLINING BACK FRONT LH	1	
	0700105-390	SEAT ASSEMBLY-RECLINING BACK FRONT RH	1	
		ATTACHING PARTS		
- 1	0713074-1	STOP-SEAT	2	
	MS24665-148	PIN-COTTER	2	
	MS20392-1-21	PIN-CLEVIS	2	
		---*---		
- 2	0700105-398	BACK ASSEMBLY-UPHOLSTERED RH	1	
	0700105-399	BACK ASSEMBLY-UPHOLSTERED LH	1	
		ATTACHING PARTS		
- 3	AN24-29A	BOLT	2	
- 4		DELETED, NEVER USED		
- 5	0710313-2	BUSHING	2	
- 6	S-1074-1	WASHER CESSNA STANDARD	2	
		---*---		
- 7	0700105-20	COVER ASSEMBLY-SEAT BACK	1	
- 8	0700105-397	PLATE ASSEMBLY-LEVER TRIM	1	
	0700105-425	PANEL ASSEMBLY-REAR	1	
- 9	0700105-400	CUSHION ASSEMBLY-UPHOLSTERED	1	
- 10	NAS696A4	NUTPLATE	2	
- 11	0700105-21	COVER ASSEMBLY-SEAT BOTTOM	1	
- 12	0700104-89	SKIRT	1	
- 13	0710316-1	HANDLE-SEAT LATCH	1	
		ATTACHING PARTS		
- 14	MS20392-2-31	PIN-FLATHEAD	1	
- 15	MS24665-134	PIN-COTTER	1	
		---*---		
- 16	0311644	CLEVIS	1	
		ATTACHING PARTS		
- 17	MS24665-285	PIN-COTTER	1	
		---*---		
- 18	0710304-2	PIN-SEAT LATCH	1	
		ATTACHING PARTS		
- 19	MS20392-1-15	PIN-FLATHEAD	1	
- 20	MS24665-134	PIN-COTTER	1	
- 21	MS24665-132	PIN-COTTER	1	
		---*---		
- 22	0310196-15	SPRING	1	
- 23	0710302-1	TUBE	1	
- 24	0710317-1	CAM-RECLINER	2	
		ATTACHING PARTS		
- 25	NAS561C3-12	ROLLPIN	1	
		---*---		
- 26	0710308-1	SPRING-CAM RETURN	1	
- 27	AN960C616L	WASHER	2	
		ATTACHING PARTS		
- 28	NAS561C2-10	ROLLPIN	2	
		---*---		
- 29	MS20392-1-39	PIN-FLATHEAD	2	
		ATTACHING PARTS		
- 30	MS24665-132	PIN-COTTER	1	
		---*---		
- 31	0311310	ROLLER-SEAT	4	
		ATTACHING PARTS		
- 32	0311586	BUSHING	1	
- 33	AN3-11A	BOLT	1	
- 34	MS20365-1032C	NUT	1	
		---*---		

180 SERIAL 18050912 & ON

182 SERIAL 18253008 & ON

CONTINUED ON PAGE 145C

FIGURE AND INDEX NO.	PART NUMBER	DESCRIPTION 1 2 3 4 5 6 7	UNITS PER ASSY	USABLE ON CODE
56A- 35	0710312-2	HANDLE-ACTUATOR	1	
		ATTACHING PARTS		
- 36	NAS561C2-10	ROLLPIN	1	
		---*---		
- 37	0700113-1	KNOB	1	
		ATTACHING PARTS		
- 38	S-1021Z-6-8	SCREW CESSNA STANDARD	1	
		---*---		
- 39	0710306-1	PLUG-STOP	2	
		ATTACHING PARTS		
- 40	NAS603-16	SCREW-STOP	2	
	AN345-10	NUT	2	
	AN960D10	WASHER	AR	
		---*---		
- 41	0800023-5	HEADREST ASSEMBLY	1	
- 42	1200108-1	FRAME-HEADREST	1	
- 43	0700320-1	RETAINER-HEADREST	2	
		A---180 SERIAL 18050912 & ON 182 SERIAL 18253008 & ON NOTE. FOR ACCESSORY KIT LISTINGS REFER TO PAGES 372 THRU 374B		

FIGURE AND INDEX NO.	PART NUMBER	DESCRIPTION 1 2 3 4 5 6 7	UNITS PER ASSY	USABLE ON CODE
56B-		SEAT INSTALLATION-ADJUSTABLE FRONT	NP	A
- 1	1200162-21	SEAT ASSEMBLY-ADJUSTABLE FRONT LH	1	
	1200162-22	SEAT ASSEMBLY-ADJUSTABLE FRONT RH	1	
		ATTACHING PARTS		
- 2	0713074-1	STOP-SEAT	2	
	MS20392-1-21	PIN-CLEVIS	2	
	MS24665-148	PIN-COTTER	2	
		---*---		
- 3	1200162-25	BACK ASSEMBLY-SEAT UPHOLSTERED LH	1	
	1200162-26	BACK ASSEMBLY-SEAT UPHOLSTERED RH	1	
		ATTACHING PARTS		
- 4	AN24-28A	BOLT	2	
- 5	AN960-416L	WASHER	2	
- 6	0710313-2	BUSHING	2	
- 7	S-1074-1	WASHER	2	
- 8	MS20365-428C	NUT	2	
		---*---		
- 9	1200162-28	COVER ASSEMBLY-SEAT BACK	1	
- 10	0700105-425	PANEL ASSEMBLY-REAR	1	
	0700105-397	PLATE ASSEMBLY-ACTUATOR LEVER TRIM	1	
- 11	AN960D10	WASHER	1	
- 12	NAS603-10	SCREW	1	
- 13	0700320-1	RETAINER-HEADREST	2	
	0800023-5	HEADREST ASSEMBLY-SEAT	1	
- 14	1200108-1	FRAME-HEADREST	1	
- 15	1200134-1	CUSHION-HEADREST	1	
- 16	1200162-23	CUSHION ASSEMBLY-SEAT UPHOLSTERED LH	1	
	1200162-24	CUSHION ASSEMBLY-SEAT UPHOLSTERED RH	1	
- 17	1200161-1	SKIRT-FRONT SEAT	1	
		ATTACHING PARTS		
- 18	S-1021Z-4-6	SCREW	11	
		---*---		
- 19	1200164-1	KNOB-FRONT SEAT LATCH	1	
		ATTACHING PARTS		
	S-1022Z-6-10	SCREW	1	
		---*---		
- 20	1200162-27	COVER-SEAT BOTTOM	1	
- 21	0710312-2	HANDLE-SEAT BACK ACTUATOR	1	
		ATTACHING PARTS		
- 22	NAS561C3-10	ROLLPIN	1	
		---*---		
		SEAT BOTTOM MECHANISM INSTALLATION-ADJUSTABLE	NP	
- 23	1200163-1	BOTTOM ASSEMBLY-SEAT LH	1	
	1200163-2	BOTTOM ASSEMBLY-SEAT RH	1	
- 24	1200142-1	ARM ASSEMBLY-LH SEAT	2	
	1200142-2	ARM ASSEMBLY-RH SEAT	2	
		ATTACHING PARTS		
- 25	NAS561-6-18	ROLLPIN	2	
		---*---		
- 26	1200136-1	COLLAR-TORQUE TUBE	3	
		ATTACHING PARTS		
- 27	NAS561-6-18	ROLLPIN	1	
		---*---		
- 28	1200147-1	TORQUE TUBE-AFT	1	
- 29	1200147-2	TORQUE TUBE-FORWARD	1	
- 30	1200152-1	LATCH PIN	1	
		ATTACHING PARTS		
- 31	MS24665-132	PIN-COTTER	1	
- 32	0311644	CLEVIS	1	
- 33	MS20392-1-15	PIN-FLATHEAD	1	
	MS24665-134	PIN-COTTER	1	
- 34	MS24665-285	PIN-COTTER	1	
		---*---		
- 35	1200146-1	TORQUE TUBE-LATCH PIN	1	
		ATTACHING PARTS		
- 36	AN960C616L	WASHER	1	
	MS24665-134	PIN-COTTER	1	
		---*---		
- 37	1200157-1	ARM ASSEMBLY-SEAT CATCH PIN	1	
		ATTACHING PARTS		
- 38	NAS561P3-8	ROLLPIN	2	
		---*---		

180 SERIAL 18051064 & ON

S-PART NOS APPEARING ON THIS PAGE ARE CESSNA STANDARD

CONTINUED ON PAGES 145E & 145F

Front Seat (Cont)

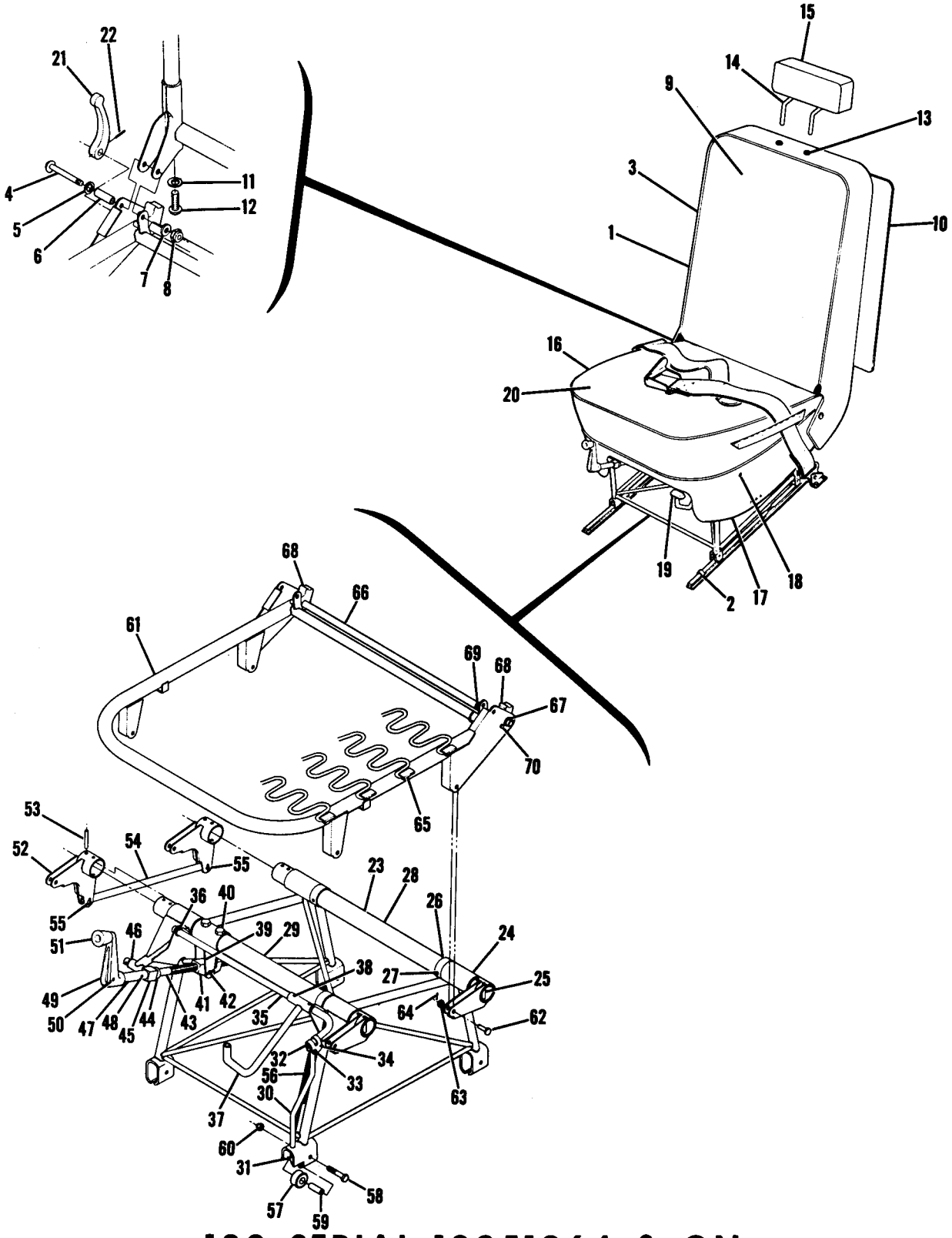

180 SERIAL 18051064 & ON

Figure 56B. Adjustable Front Seat

FIGURE AND INDEX NO.	PART NUMBER	DESCRIPTION 1 2 3 4 5 6 7	UNITS PER ASSY	USABLE ON CODE
56B- 39	1200141-1	BELLCRANK ASSEMBLY-LH SEAT SCREW	1	
	1200141-2	BELLCRANK ASSEMBLY-RH SEAT SCREW	1	
		ATTACHING PARTS		
- 40	AN4-14A	BOLT	2	
	MS20365-428C	NUT	2	
		---*---		
- 41	1200139-1	NUT-SEAT ADJUST SCREW	1	
		ATTACHING PARTS		
- 42	MS20392-2-20	PIN-FLATHEAD	1	
	AN960-10	WASHER	1	
	MS24665-132	PIN-COTTER	1	
		---*---		
- 43	1200155-1	SCREW-ADJUSTABLE FRONT SEAT	1	
- 44	1200138-1	COLLAR-ADJUSTABLE FRONT SEAT SCREW	1	
		ATTACHING PARTS		
	NAS561P4-10	ROLLPIN	1	
		---*---		
- 45	1200154-1	BEARING BLOCK-SCREW	1	
		ATTACHING PARTS		
- 46	AN960-716	WASHER	1	
	MS24665-351	PIN	1	
		---*---		
- 47	1200156-1	SPACER-SCREW HANDLE	1	
		ATTACHING PARTS		
- 48	NAS561P4-8	ROLLPIN	1	
		---*---		
- 49	1200159-1	HANDLE ASSEMBLY-ADJUSTABLE FRONT SEAT	1	
		ATTACHING PARTS		
- 50	NAS561P4-12	ROLLPIN	1	
		---*---		
- 51	1200092-1	KNOB-SCREW HANDLE	1	
- 52	1200143-1	ARM ASSEMBLY-SEAT LH	2	
	1200143-2	ARM ASSEMBLY-SEAT RH	2	
		ATTACHING PARTS		
- 53	NAS561-6-18	ROLLPIN	2	
		---*---		
- 54	1200137-1	ROD-SEAT ACTUATOR	1	
		ATTACHING PARTS		
- 55	MS20392-2-17	PIN-FLATHEAD	2	
	AN960-10	WASHER	2	
	MS24665-132	PIN-COTTER	2	
		---*---		
- 56	0310196-15	SPRING-SEAT LATCH PIN	1	
- 57	0311310	ROLLER-SEAT	4	
		ATTACHING PARTS		
- 58	AN3-11A	BOLT	1	
- 59	0311586	BUSHING-ROLLER	1	
- 60	MS20365-1032C	NUT	1	
		---*---		
- 61	1200158-1	FRAME ASSEMBLY-SEAT LH	1	
	1200158-5	FRAME ASSEMBLY-SEAT RH	1	
		ATTACHING PARTS		
- 62	MS20392-2-17	PIN	4	
- 63	AN960-10	WASHER	4	
- 64	MS24665-132	PIN-COTTER	4	
		---*---		
- 65	S-1146-1	CLIP-UPHOLSTERY SPRING CESSNA STANDARD	8	
- 66	0710302-1	TUBE-SEAT BACK RECLINER	1	
		ATTACHING PARTS		
- 67	AN960C616L	WASHER	2	
	NAS561C3-10	ROLLPIN	2	
		---*---		
- 68	0710317-1	RECLINER CAM-SEAT BACK	2	
		ATTACHING PARTS		
	NAS561C3-12	ROLLPIN	1	
		---*---		
- 69	0710308-1	SPRING-CAM RETURN	1	
- 70	MS20392-1-39	PIN-FLATHEAD	2	
		ATTACHING PARTS		
	MS24665-130	PIN-COTTER	1	
		---*---		

A---180 SERIAL 18051064 & ON

Rear Seat

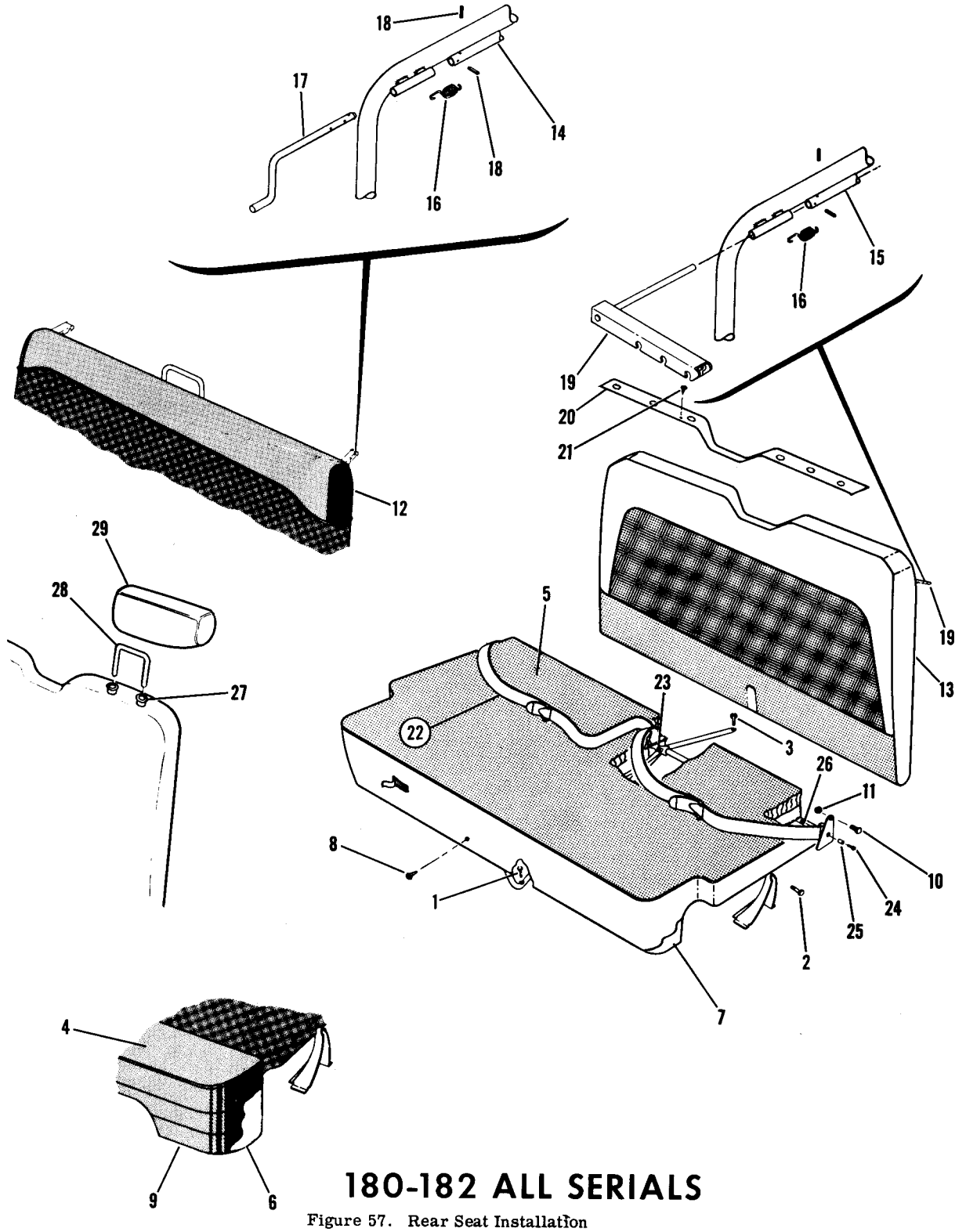

180-182 ALL SERIALS

Figure 57. Rear Seat Installation

FIGURE AND INDEX NO.	PART NUMBER	DESCRIPTION 1 2 3 4 5 6 7	UNITS PER ASSY	USABLE ON CODE
57-		SEAT INSTALLATION-REAR ---------- 180-182 ----------	NP	
	0700100-44	CUSHION ASSEMBLY-REAR SEAT---------- ALL SERIALS ----------	1	A
	0700101-44	CUSHION ASSEMBLY-REAR SEAT------ ------	1	B
	0700102-44	CUSHION ASSEMBLY-REAR SEAT------ ------	1	C
	0700103-59	CUSHION ASSEMBLY-REAR SEAT----------	1	D
	0700105-8	CUSHION ASSEMBLY-REAR SEAT----------	1	F
	0700105-52	CUSHION ASSEMBLY-REAR SEAT----------	1	G
	0700105-252	CUSHION ASSEMBLY-REAR SEAT---- DELUXE ----------	1	L
	0700105-410	CUSHION ASSEMBLY-REAR SEAT---- UTILITY ----------	1	T
		ATTACHING PARTS		
- 1	AN3-11A	BOLT ----------	1	
- 2	AN3-10A	BOLT ----------	2	
- 3	AN4-6A	BOLT ----------	1	
		---*---		
- 4	0700100-129	COVER ASSEMBLY-REAR SEAT BOTTOM ----------	1	A
	0700101-129	COVER ASSEMBLY-REAR SEAT BOTTOM ----------	1	B
	0700102-129	COVER ASSEMBLY-REAR SEAT BOTTOM ----------	1	C
- 5	0700103-58	COVER ASSEMBLY-REAR SEAT BOTTOM ----------	1	D
	0700105-11	COVER ASSEMBLY-REAR SEAT BOTTOM ----------	1	K
	0700105-465	COVER ASSEMBLY - REAR SEAT BOTTOM----------	1	T
- 6	0511174	RETAINER-REAR SEAT UPHOLSTERY ----------	1	E
- 7	0511174-1	RETAINER-REAR SEAT UPHOLSTERY ----------	1	H
		ATTACHING PARTS		
- 8	S-1021Z-6-4	SCREW CESSNA STANDARD ----------	5	E
	S-1021Z-6-4	SCREW CESSNA STANDARD ----------	1	H
		---*---		
- 9	0700100-114	COVER-RETAINER----------	1	E
	0700102-189	BUTTON ASSEMBLY-TUFTING ----------	2	J
	7283	BUTTON-TUFTING-----WTS ----------	2	J
	0700100-45	BACK ASSEMBLY-REAR SEAT ----------	1	A
	0700101-45	BACK ASSEMBLY-REAR SEAT ----------	1	B
	0700102-45	BACK ASSEMBLY-REAR SEAT ----------	1	C
	0700103-62	BACK ASSEMBLY-REAR SEAT ----------	1	D
	0700105-62	BACK ASSEMBLY-REAR SEAT ----------	1	F
	0700105-51	BACK ASSEMBLY-REAR SEAT ----------	1	G
	0700105-251	BACK ASSEMBLY-REAR SEAT ----------	1	M
	0700105-351	BACK ASSEMBLY-REAR SEAT DELUXE ----------	1	N
	0700105-462	BACK ASSEMBLY-REAR SEAT UTILITY----------	1	T
		ATTACHING PARTS		
- 10	AN4-11A	BOLT ----------	2	
- 11	MS20365-428C	NUT ----------	2	
		---*---		
- 12	0700100-132	COVER ASSEMBLY-REAR SEAT BACK ----------	1	A
	0700101-132	COVER ASSEMBLY-REAR SEAT BACK ----------	1	B
	0700102-132	COVER ASSEMBLY-REAR SEAT BACK ----------	1	C
- 13	0700103-65	COVER ASSEMBLY--REAR SEAT BACK ----------	1	D
	0700105-10	COVER ASSEMBLY-REAR SEAT BACK ----------	1	K
- 14	0511108-22	LATCH-SEAT BACK ----------	1	E
- 15	0411623-1	LATCH-SEAT BACK ----------	1	H
- 16	0511049	SPRING-LATCH LH ----------	1	
	0511049-1	SPRING-LATCH RH ----------	1	
- 17	0411629	ARM-SEAT BACK LATCH----------	1	E
		ATTACHING PARTS		
- 18	NAS561P3-6	PIN-ROLL EN ----------	1	
		---*---		
- 19	0511284-3	LATCH ASSEMBLY-REAR SEAT LH ----------	1	H
	0511284-4	LATCH ASSEMBLY-REAR SEAT RH ----------	1	H
	0700102-89	BUTTON PEARL TUFTING ----------	2	J
	7283	BUTTON TUFTING-----WTS ----------	2	J

CONTINUED ON PAGE 148

FIGURE AND INDEX NO.	PART NUMBER	DESCRIPTION 1 2 3 4 5 6 7	UNITS PER ASSY	USABLE ON CODE
57- 20	0700105-82	STRIP-BOLSTER	1	K
		ATTACHING PARTS		
- 21	S-1021Z-4-6	SCREW CESSNA STANDARD	10	
		---*---		
- 22	0311710-6	BELT ASSEMBLY-SAFETY WHEN EXHAUSTED USE S-1060-8 TAN	2	E
	S-1060-8	BELT ASSEMBLY-SAFETY CESSNA STANDARD-----TAN	2	E
	0311710-8	BELT ASSEMBLY-SAFETY WHEN EXHAUSTED USE S-1060-11 GRAY	2	D
	S-1060-11	BELT ASSEMBLY-SAFETY CESSNA STANDARD-----GRAY	2	D
	0311710-10	BELT ASSEMBLY-SAFETY WHEN EXHAUSTED USE S-1060-1 BLACK	2	P
	S-1060-1	BELT ASSEMBLY-SAFETY CESSNA STANDARD-----BLACK	2	Q
	0311710-15	BELT ASSEMBLY-SAFETY WHEN EXHAUSTED USE S-1060-2 GOLD	2	R
	S-1060-2	BELT ASSEMBLY-SAFETY CESSNA STANDARD-----GOLD	2	S
	S-1060-14	BELT ASSEMBLY-SAFETY BEIGE	2	T
		ATTACHING PARTS		
- 23	AN4-11A	BOLT	1	
	NAS43-4-47	SPACER	1	
	MS20365-428C	NUT	1	
- 24	AN4-5A	BOLT	2	
- 25	NAS43-4-12	SPACER	2	
- 26	MS20365-428C	NUT	2	
		---*---		
- 27	0700320-1	RETAINER-HEADREST	4	N
- 28	1200103-5	SUPPORT-HEADREST	2	N
- 29	1200103-3	HEADREST-REAR LH	1	N
	1200103-4	HEADREST-REAR RH	1	N

A---180 SERIAL 30000 THRU 30639
B---180 SERIAL 30640 THRU 31260
C---180 SERIAL 31261 THRU 32150
D---180 SERIAL 32151 THRU 32661
182 SERIAL 33000 THRU 33842
E---180 SERIAL 30000 THRU 32150
F---180 SERIAL 32662 THRU 50105
182 SERIAL 33843 THRU 34753
G---180 SERIAL 50106 THRU 50355
182 SERIAL 34754 THRU 51556
H---180 SERIAL 32151 & ON
182 SERIAL 33000 & ON
J---180 SERIAL 30000 THRU 32661
182 SERIAL 33000 THRU 33842
K---180 SERIAL 32662 & ON
182 SERIAL 33843 & ON
L---180 SERIAL 50356 & ON
182 SERIAL 51557 & ON
M---180 SERIAL 50356 THRU 50661
182 SERIAL 51557 THRU 52358
N---180 SERIAL 50662 & ON
182 SERIAL 52359 & ON
P---180 SERIAL 32662 THRU 50664
182 SERIAL 33843 THRU 52358
Q---180 SERIAL 32662 & ON
182 SERIAL 33843 THRU 52358
R---182 SERIAL 52359 THRU 52438
S---182 SERIAL 52359 & ON
T---180 SERIAL 18051064 & ON

NOTE. FOR ACCESSORY KIT LISTINGS REFER TO PAGES 372 THRU 374B

This page intentionally left blank.

Auxiliary Seat

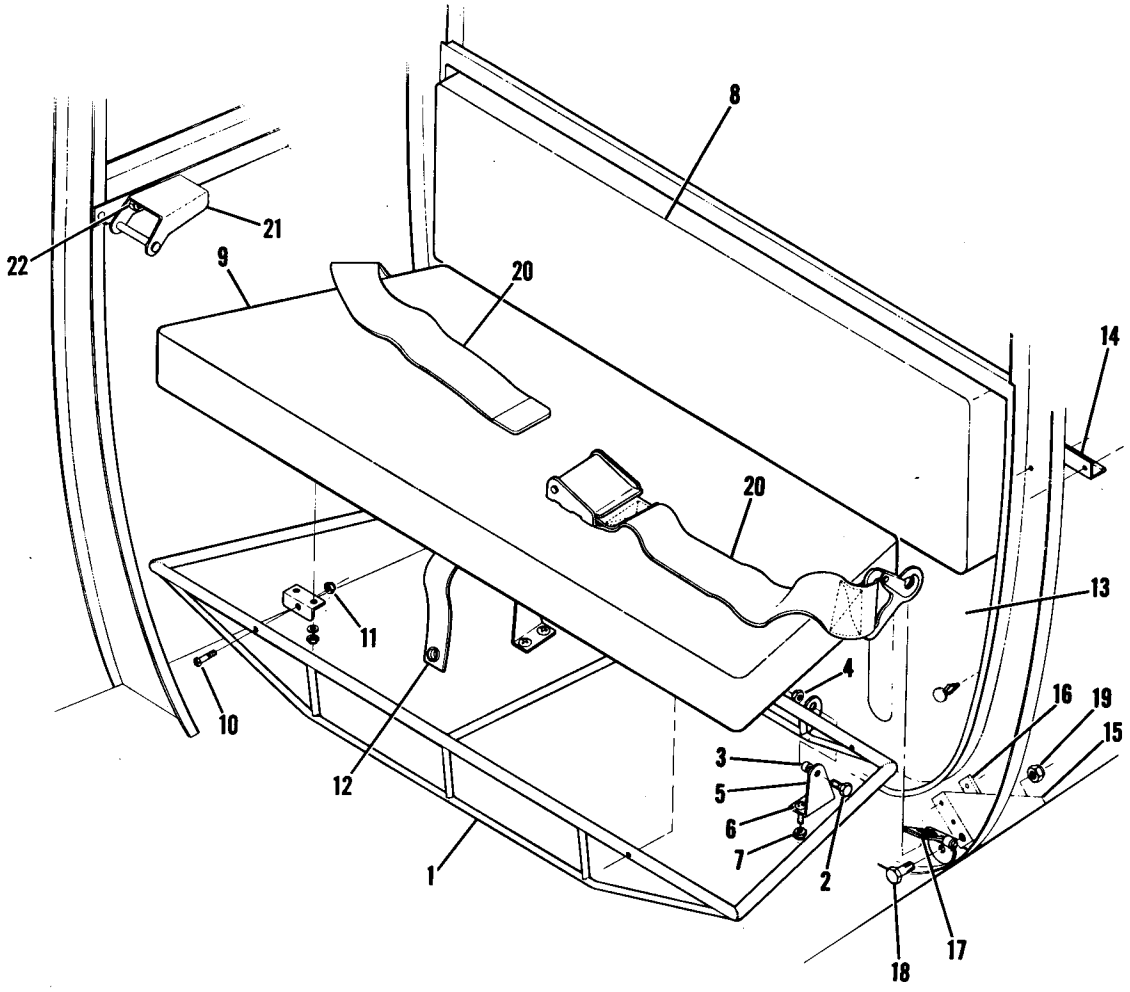

180 SERIAL 18051064 & ON

Figure 57A. Auxiliary Seat Installation

FIGURE AND INDEX NO.	PART NUMBER	DESCRIPTION 1 2 3 4 5 6 7	UNITS PER ASSY	USABLE ON CODE
57A-		SEAT INSTALLATION-AUXILIARY	NP	A
- 1	0711097-2	FRAME ASSEMBLY	1	
		ATTACHING PARTS		
- 2	AN3-4A	BOLT	2	
- 3	NAS43-3-6	SPACER	2	
- 4	MS20365-428C	NUT	2	
		---*---		
- 5	0711098-3	HINGE-FLOOR FITTING LH	1	
	0711098-4	HINGE-FLOOR FITTING RH	1	
		ATTACHING PARTS		
- 6	AN515-8R8	SCREW	2	
- 7	MS20365-832C	NUT	2	
		---*---		
- 8	0711080-1	BACKREST ASSEMBLY	1	
	AN227-7	SOCKET	5	
	AN227-6	BUTTON	5	
- 9	0711097-4	CUSHION ASSEMBLY	1	
		ATTACHING PARTS		
- 10	AN515-8R14	SCREW	4	
- 11	MS20365-832C	NUT	4	
		---*---		
- 12	0711097-21	STRAP ASSEMBLY	1	
- 13	0711079-1	TRAY ASSEMBLY	1	
		ATTACHING PARTS		
	49265F-938	STUD UC	4	
		---*---		
- 14	0710011-1	ANGLE	1	
- 15	0712008-1	BRACKET	2	
- 16	0712009-1	SPACER	2	
- 17	0711083-1	LATCH ASSEMBLY	2	
		ATTACHING PARTS		
- 18	AN4-6A	BOLT	1	
- 19	MS20365-428C	NUT	1	
		---*---		
- 20	S-1243-6	BELT ASSEMBLY-SAFETY CESSNA STANDARD	1	
- 21	0511286	LATCH ASSEMBLY-REAR SEAT BACK	1	
		ATTACHING PARTS		
- 22	AN3-3A	BOLT	2	
		---*---		

180 SERIAL 18051064 & ON

A---180 SERIAL 18051064 & ON

This page intentionally left blank.

FIGURE AND INDEX NO.	PART NUMBER		DESCRIPTION 1 2 3 4 5 6 7	UNITS PER ASSY	USABLE ON CODE
58-			EQUIPMENT INSTALLATION-STATIONARY INSTRUMENT PANEL	NP	A
- 1	S-1103-1		JACK-HEAD PHONE CESSNA STANDARD	2	
- 2	PSM35N		CIRCUIT BREAKER SPT	1	
- 3	CM-15		CIRCUIT BREAKER SPT	4	
- 4	CM-25		CIRCUIT BREAKER SPT	1	
- 5	0511063		SWITCH-STARTER	1	
- 6	0713026-5		SWITCH ASSEMBLY-MASTER	1	
	0411092-1		KNOB	1	
- 7	0713026-4		SWITCH ASSEMBLY-POSITION LIGHT	1	
	0411092-1		KNOB	1	
- 8	0713035		SWITCH ASSEMBLY-LANDING LIGHT	1	
	0411092-1		KNOB	1	
- 9	0713041		CONTROL-COWL FLAPS	1	
- 10	0411090-13		CONTROL-CABIN AIR	1	
- 11	0411090-22		CONTROL-CARBURETOR HEAT REF 0411090-21	1	
- 12	0713027		PLATE-INSTRUMENT PANEL DECORATIVE PLEXIGLASS	1	
- 13	0411091-8		CONTROL-THROTTLE	1	
- 14	0311031-4		CONTROL-PROPELLER	1	
- 15	0511062-2		INDICATOR-STALL WARNING	1	
			ATTACHING PARTS		
- 16	AN515-6R12		SCREW	4	
- 17	AN960C6		WASHER	12	
			---*---		
	0511062-3		LAMP-STALL WARNING INDICATOR	1	
- 18	0311038-2		SWITCH-IGNITION	1	
- 19	0311777		SHIELD ASSEMBLY-IGNITION SWITCH	1	
- 20	MS35489-6		GROMMET	1	
- 21	AN742D3		CLAMP	1	
			ATTACHING PARTS		
- 22	S-1021Z-6-6		SCREW CESSNA STANDARD	1	
			---*---		
- 23	0311538-8		PRIMER ASSEMBLY-ENGINE	1	
- 24	0513039-7	*	LIGHTER-CIGAR CUNO	1	
	32	*	SOCKET ASSEMBLY CUNO	1	
	34	*	TRIM CUP CUNO	1	
	33	*	HEATING ELEMENT CUNO	1	
	0412480-3		KNOB-CIGAR LIGHTER	1	
- 25	0411090-22		CONTROL-CABIN HEAT REF 0411090-20	1	
- 26	0411090-29		CONTROL-PARKING BRAKE REF 0411090-7	1	
- 27	0411090-22		CONTROL-CARBURETOR MIXTURE REF 0411090-21	1	
- 28	0513173-1		CONTROL LOCK-MIXTURE	1	
- 29			DELETED REPLACED BY 0513173-1		
- 30			DELETED REPLACED BY 0513173-1		
- 31	48152		PLUG BUTTON-UC	8	
- 32	0713003-18		BUSS STRIP-CIRCUIT BREAKER	2	
- 33	0413126		RHEOSTAT ASSEMBLY-PANEL LIGHT WITH KNOB	1	
- 34	60 OHM-10W		RESISTOR OM	1	
			ATTACHING PARTS		
- 35	AN515-6R36		SCREW	1	
- 36	6515		WASHER-FIBER 1ESC	1	
- 37	MS20365-632C		NUT	1	
			---*---		
- 38	0411224		BALL-CONTROL TUBE	2	
	0411225		SOCKET-BALL	4	
			ATTACHING PARTS		
- 39	AN515-6R8		SCREW	3	
	AN960-6L		WASHER	3	
	MS20365-632C		NUT	3	
			---*---		
- 40	0412499-1		BOX ASSEMBLY-GLOVE	1	
			ATTACHING PARTS		
- 41	S-1021Z-6-6		SCREW CESSNA STANDARD	4	
			---*---		

180 SERIAL 30000 THRU 32150

CONTINUED ON PAGES 150 & 151

Instruments

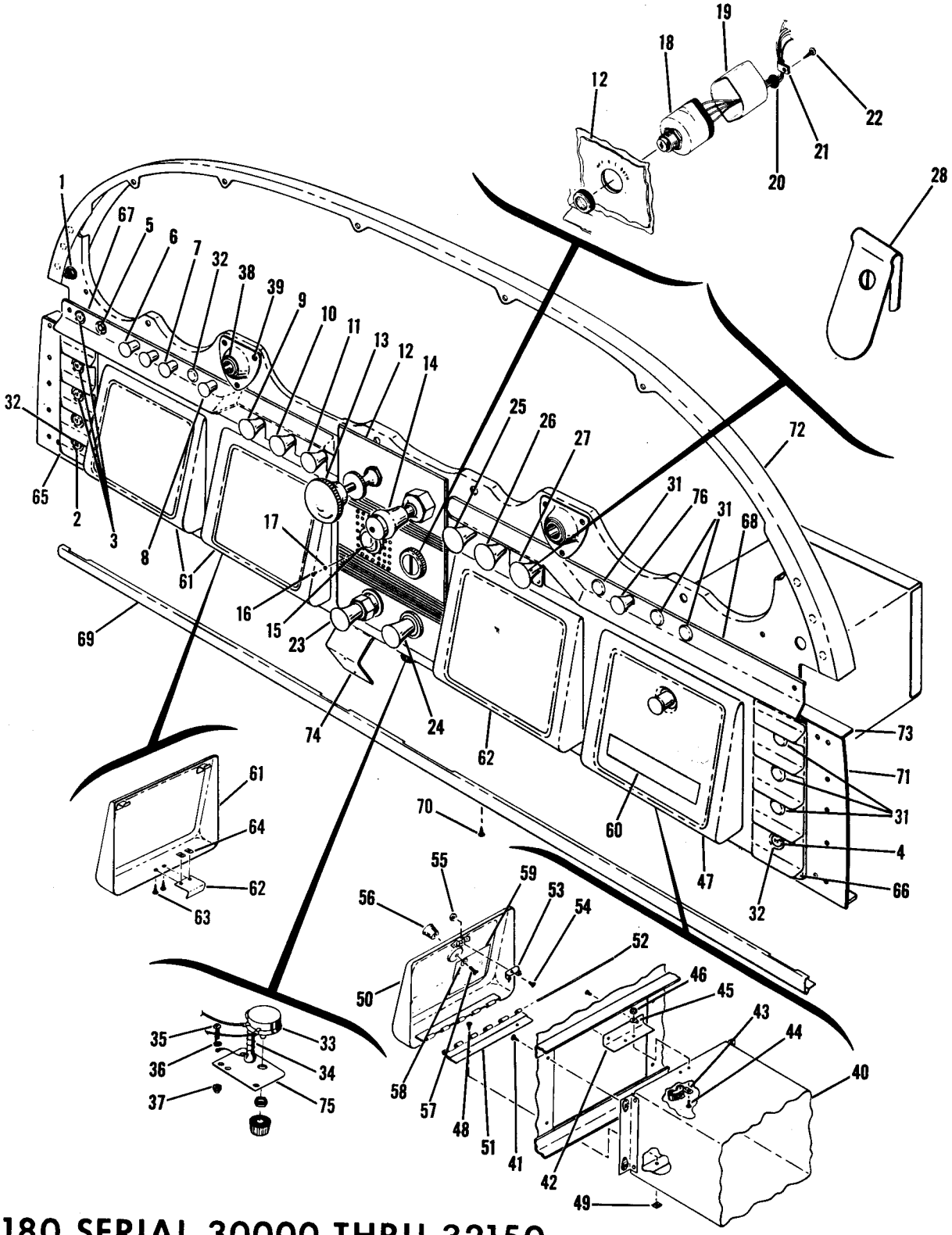

180 SERIAL 30000 THRU 32150

Figure 58. Stationary Instrument Panel Equipment Installation

FIGURE AND INDEX NO.	PART NUMBER	DESCRIPTION 1 2 3 4 5 6 7	UNITS PER ASSY	USABLE ON CODE
58- 42	0713003-10	ANGLE-CATCH SUPPORT	1	
- 43	0713009-2	CATCH-GLOVE BOX DOOR	1	
		ATTACHING PARTS		
- 44	AN515-6R6	SCREW	2	
- 45	AN960C8	WASHER	AR	
- 46	MS20365-632C	NUT	2	
		---*---		
- 47	0713003-1	DOOR ASSEMBLY-GLOVE BOX	1	
		ATTACHING PARTS		
- 48	S-1021Z-6-6	SCREW CESSNA STANDARD	2	
- 49	NAS446-2-3	NUT TIN A1181-6Z-3	2	
		---*---		
- 50	0713003-42	WELD ASSEMBLY-DOOR	1	
- 51	0713003-41	WELD ASSEMBLY-HINGE	1	
- 52	0713003-40	PIN-HINGE	1	
- 53	0713009-1	CLIP-GLOVE BOX DOOR	1	
		ATTACHING PARTS		
- 54	AN515-6R4	SCREW	1	
- 55	MS20365-632C	NUT	1	
		---*---		
- 56	0411092-1	KNOB	1	
		ATTACHING PARTS		
- 57	AN515-8R5	SCREW	1	
- 58	AN936A8	WASHER	1	
		---*---		
- 59	0713210-2	PLACARD-TIRE & OIL DATA	1	
- 60	0713210-3	PLACARD-CATAGORY	1	
- 61	0713003-24	COVER ASSEMBLY-RADIO OPENING	3	
- 62	0713003-23	CLIP	1	
		ATTACHING PARTS		
- 63	S-1021Z-4-6	SCREW CESSNA STANDARD	2	
- 64	NAS446-1-3	NUT TIN A1776-4Z-3	2	
		---*---		
- 65	0713200-17-110	COVER-CIRCUIT BREAKER LH	1	
- 66	0713200-30-110	COVER-CIRCUIT BREAKER RH	1	
		ATTACHING PARTS		
	S-1021Z-4-6	SCREW CESSNA STANDARD	2	
		---*---		
- 67	0713200-33-110	COVER-SWITCH PANEL LH	1	
- 68	0713200-32-110	COVER-SWITCH PANEL RH	1	
		ATTACHING PARTS		
	S-1023A-4-6C	SCREW CESSNA STANDARD	3	
		---*---		
- 69	0713200-14	STRIP-CHROME DECORATIVE	1	
		ATTACHING PARTS		
- 70	S-1021Z-8-6	SCREW CESSNA STANDARD	5	
		---*---		
- 71	0713200-34	PANEL-STATIONARY	1	
- 72	0713200-12	CHANNEL	1	
- 73	0713200-9	STIFFENER	2	
- 74	0713200-19	BRACKET-MICROPHONE MOUNTING	1	
- 75	0413131-3	BRACKET-RHEOSTAT MOUNTING	1	
- 76	0713035	SWITCH ASSEMBLY-HEATER	1	

A---180 SERIAL 30000 THRU 32150
NOTE. * CASCO PARTS ARE NO LONGER AVAILABLE. FOR REPLACEMENT ORDER COMPLETE CUNO ASSEMBLY, 0513039-7 & RESPECTIVE KNOB.
NOTE. FOR ACCESSORY KIT LISTINGS REFER TO PAGES 372 THRU 374B

Instruments (Cont)

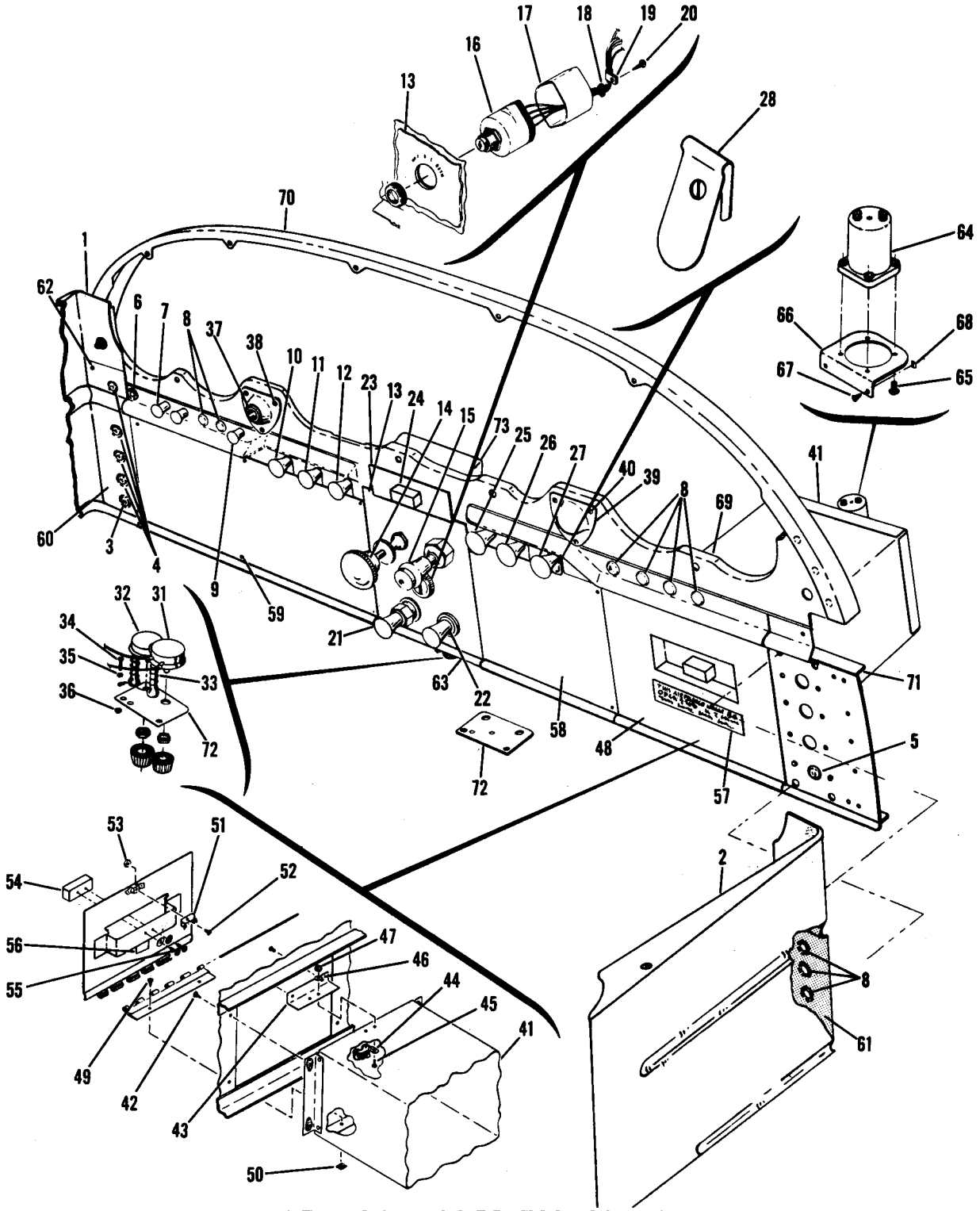

180 SERIAL 32151 THRU 32661
182 SERIAL 33000 THRU 33842

Figure 59. Stationary Instrument Panel Equipment Installation

FIGURE AND INDEX NO.	PART NUMBER		DESCRIPTION 1 2 3 4 5 6 7	UNITS PER ASSY	USABLE ON CODE
59-			EQUIPMENT INSTALLATION-STATIONARY INSTR PANEL	NP	A
- 1	0713201-25		PANEL-LH	1	
- 2	0713201-26		PANEL-RH	1	
			ATTACHING PARTS		
	S-1021A-4-10C		SCREW CESSNA STANDARD	4	
			---*---		
- 3	CM-25		CIRCUIT BREAKER SPT	1	
- 4	CM-15		CIRCUIT BREAKER SPT	4	
- 5	CM-35		CIRCUIT BREAKER SPT	1	
- 6	0511063		SWITCH-STARTER	1	
			ATTACHING PARTS		
			NUT	NP	
			---*---		
- 7	0713026-5		SWITCH ASSEMBLY-MASTER	1	
	0411092-1		KNOB	1	
- 8	48152		PLUG BUTTON-----UC	AR	
- 9	0713035		SWITCH ASSEMBLY-LANDING LIGHT	1	
	0411092-1		KNOB	1	
- 10	0713041		CONTROL-COWL FLAPS	1	B
- 11	0411090-13		CONTROL-CABIN AIR	1	
- 12	0713050		CONTROL-CARBURETOR HEAT	1	
- 13	0713201-16		PLATE-INSTRUMENT PANEL DECORATIVE	1	
- 14	0411091-8		CONTROL-THROTTLE	1	
- 15	0311031-4		CONTROL-PROPELLER	1	
- 16	0311038-2		SWITCH-IGNITION	1	
- 17	0311777		SHIELD ASSEMBLY-IGNITION SWITCH	1	
- 18	MS35489-11		GROMMET	1	
- 19	AN742D3		CLAMP	1	
			ATTACHING PARTS		
- 20	S-1021Z-6-6		SCREW CESSNA STANDARD	1	
			---*---		
- 21	0311538-8		PRIMER ASSEMBLY-ENGINE	1	
- 22	0513039-7	*	LIGHTER-CIGAR CUNO	1	
	32	*	SOCKET ASSEMBLY CUNO	1	
	34	*	TRIM CUP CUNO	1	
	33	*	HEATING ELEMENT CUNO	1	
	0412480-3		KNOB-CIGAR LIGHTER	1	
- 23	0713202-1		RECEIVER ASSEMBLY-ASH	1	
- 24	Q713201-17		KNOB-ASH RECEIVER	1	
			ATTACHING PARTS		
	AN515-6R6		SCREW CESSNA STANDARD	2	
			---*---		
- 25	0411090-22		CONTROL-CABIN HEAT REF 0411090-20	1	
- 26	0411090-29		CONTROL-PARKING BRAKE-----REF 0411090-7	1	
- 27	0411090-22		CONTROL-CARBURETOR MIXTURE---- REF 0411090-21	1	
- 28	0513173-1		CONTROL LOCK-MIXTURE	1	
- 29			DELETED REPLACED BY 0513173-1		
- 30			DELETED REPLACED BY 0513173-1		
- 31	0413126-7		RHEOSTAT ASSEMBLY-PANEL LIGHT WITH KNOB	1	
- 32	0413126-4		RHEOSTAT ASSEMBLY-PANEL LIGHT WITH KNOB	1	
- 33	60 OHM-10W		RESISTOR OM	2	
			ATTACHING PARTS		
- 34	AN515-6R6		SCREW	1	
- 35	6515		WASHER-----IESC	1	
- 36	MS20365-632C		NUT	1	
			---*---		
- 37	0411225		SOCKET-BALL	2	
	0411224		BALL-CONTROL TUBE	1	
			ATTACHING PARTS		
- 38	AN515-6R8		SCREW	3	
	AN960-6L		WASHER	3	
	MS20365-632C		NUT	3	
			---*---		
- 39	0411225-1		COVER-CONTROL OPENING RH	1	
	0411224		BALL-CONTROL TUBE RH	1	
	0411225		SOCKET-BALL RH	2	
			ATTACHING PARTS		
- 40	AN515-6R8		SCREW	3	
	AN960-6L		WASHER	3	
	MS20365-632C		NUT	3	
			---*---		

CONTINUED ON PAGE 154

180 SERIAL 32151 THRU 32661

182 SERIAL 33000 THRU 33842

FIGURE AND INDEX NO.	PART NUMBER	DESCRIPTION 1 2 3 4 5 6 7	UNITS PER ASSY	USABLE ON CODE
59- 41	0713010	BOX ASSEMBLY-GLOVE	1	
		ATTACHING PARTS		
- 42	S-1021Z-6-6	SCREW CESSNA STANDARD	4	
		---*---		
- 43	0713201-8	ANGLE-CATCH SUPPORT	1	
- 44	0713009-2	CATCH-GLOVE BOX DOOR	1	
		ATTACHING PARTS		
- 45	AN515-6R6	SCREW	2	
- 46	AN960C6	WASHER	AR	
- 47	MS20365-632C	NUT	2	
		---*---		
- 48	0713201-19	DOOR ASSEMBLY-GLOVE BOX	1	B
	0713201-31	DOOR ASSEMBLY-GLOVE BOX	1	C
		ATTACHING PARTS		
- 49	S-1021Z-8-6	SCREW CESSNA STANDARD	2	
- 50	NAS446-4-3	NUT TIN A1778-8Z-3	2	
		---*---		
- 51	0713009-1	CLIP-GLOVE BOX DOOR	1	
		ATTACHING PARTS		
- 52	AN515-6R4	SCREW	1	
- 53	MS20365-632C	NUT	1	
		---*---		
- 54	0713201-17	KNOB	1	
		ATTACHING PARTS		
- 55	AN515-6R6	SCREW	2	
		---*---		
- 56	0713210-9	PLACARD-ENGINE OIL & TIRE PRESSURE	1	C
	0713210-11	PLACARD-ENGINE OIL & TIRE PRESSURE	1	B
- 57	0713210-6	PLACARD-OPERATIONAL LIMITATIONS	1	B
	0713058	PLACARD-OPERATIONAL LIMITATIONS	1	C
- 58	0713201-33-146	COVER-INSTRUMENT PANEL	1	C
	0713201-27-146	COVER-INSTRUMENT PANEL	1	B
		ATTACHING PARTS		
- 59	S-1021Z-4-5	SCREW CESSNA STANDARD	16	
		---*---		
	0713201-29-146	COVER-SWITCH PANEL LH	1	
1	0713201-30-146	COVER-SWITCH PANEL RH	1	
		ATTACHING PARTS		
62	S-1023A-4-6C	SCREW CESSNA STANDARD	4	
		---*---		
- 63	0713201-6	STRIP-TRIM	1	
- 64	0511062-10	HORN ASSEMBLY-STALL WARNING INDICATOR	1	
		ATTACHING PARTS		
- 65	AN515B6R12	SCREW	4	
		---*---		
- 66	0313313-3	BRACKET-STALL WARNER	1	
		ATTACHING PARTS		
- 67	S-1021Z-8-6	SCREW CESSNA STANDARD	2	
- 68	NAS446-4-3	NUT TIN A1778-8Z-3	2	
		---*---		
- 69	0713201-1	PANEL-STATIONARY	1	
- 70	0713200-12	CHANNEL	1	
- 71	0713200-9	STIFFENER	2	
- 72	0413131-3	BRACKET-RHEOSTAT MOUNTING	1	
- 73	0713201-9	BRACKET-ASH RECEIVER LH	1	
	0713201-10	BRACKET-ASH RECEIVER RH	1	
	0713201-2	BRACKET-ASH RECEIVER UPPER	1	

A---180 SERIAL 32151 THRU 32661
182 SERIAL 33000 THRU 33842
B---180 SERIAL 32151 THRU 32661
C---182 SERIAL 33000 THRU 33842
NOTE. * CASCO PARTS ARE NO LONGER AVAILABLE. FOR REPLACEMENT ORDER COMPLETE CUNO ASSEMBLY. 0513039-7 & RESPECTIVE KNOB
NOTE. FOR ACCESSORY KIT LISTINGS REFER TO PAGES 372 THRU 3748

FIGURE AND INDEX NO.	PART NUMBER		DESCRIPTION 1 2 3 4 5 6 7	UNITS PER ASSY	USABLE ON CODE
60-			STATIONARY INSTRUMENT PANEL EQUIPMENT INSTALLATION	NP	A
- 1	0713214-23-146		COVER-STATIONARY PANEL ---180 SERIAL---	1	B
	0713214-24-156		COVER-STATIONARY PANEL ---180 SERIAL---	1	C
			ATTACHING PARTS		
- 2	S-1021Z-4-4		SCREW CESSNA STANDARD 32662 THRU 50355	8	
			---*---		
- 3	PSM15N		CIRCUIT BREAKER SPT ---182 SERIAL---	3	D
	PSM10N		CIRCUIT BREAKER SPT ---182 SERIAL---	2	E
	PSM5N		CIRCUIT BREAKER SPT 33843 THRU 51556	1	E
- 4	PSM25N		CIRCUIT BREAKER SPT 33843 THRU 51556	1	D
	PSM20N		CIRCUIT BREAKER SPT 33843 THRU 51556	1	E
- 5	PSM35N		CIRCUIT BREAKER SPT 33843 THRU 51556	1	
	PDM50		CIRCUIT BREAKER SPT 33843 THRU 51556	1	
- 6	PSM10N		CIRCUIT BREAKER SPT 33843 THRU 51556	4	
- 7	0511063		SWITCH-STARTER	1	
			ATTACHING PARTS		
			NUT	NP	
			---*---		
- 8	0713026-5		SWITCH-MASTER	1	
	0411092-1		KNOB	1	
- 9	0713026-4		SWITCH ASSEMBLY-NAVIGATION LIGHT	1	
	0411092-1		KNOB-SWITCH	1	
- 10	0713035		SWITCH ASSEMBLY-LANDING LIGHT	1	
	0411092-1		KNOB-SWITCH	1	
- 11	0513051-1		LIGHT ASSEMBLY-CHARGE INDICATOR	1	F
	0513051-8		LIGHT ASSEMBLY-CHARGE INDICATOR	1	G
			ATTACHING PARTS		
- 12	0713072-1		WASHER	1	
			---*---		
	1816		BULB-CHARGE INDICATOR	1	
- 13	0411090-22		CONTROL-CARBURETOR HEAT REF 0411090-5	1	C
	0713050		CONTROL-CARBURETOR HEAT	1	B
- 14	0311538-8		PRIMER ASSEMBLY-ENGINE	1	
- 15	0411090-29		CONTROL-STRAINER DRAIN REF 0411090-7	1	
- 16	0411091-19		CONTROL-THROTTLE	1	
- 17	0311031-4		CONTROL-PROPELLER	1	
- 18	0411090-13		CONTROL-CABIN AIR REF 0411090-13	1	
- 19	0411090-22		CONTROL-CABIN HEAT REF 0411090-20	1	
- 20	0513039-7	*	LIGHTER-CIGAR CUNO	1	
	32	*	SOCKET ASSEMBLY CUNO	1	
	34	*	TRIM CUP CUNO	1	
	33	*	HEATING ELEMENT CUNO	1	
	0412480-3		KNOB-CIGAR LIGHTER	1	
- 21	0411090-22		CONTROL-CARBURETOR MIXTURE REF 0411090-21	1	
- 22	0513173-1		CONTROL LOCK-MIXTURE	1	
- 23			DELETED REPLACED BY 0513173-1		
- 24			DELETED REPLACED BY 0513173-1		
- 25	0311038-2		SWITCH-IGNITION	1	
- 26	0311777		SHIELD ASSEMBLY	1	
- 27	MS35489-6		GROMMET	1	
- 28	AN742D4		CLAMP	1	
			ATTACHING PARTS		
- 29	S-1021Z-6-6		SCREW CESSNA STANDARD	1	
			---*---		
- 30	0713202-1		RECEIVER ASSEMBLY-ASH	1	
	0713201-17		KNOB-ASH RECEIVER	1	
			ATTACHING PARTS		
	AN515-6R6		SCREW	2	
			---*---		
- 31	0713010		BOX ASSEMBLY-GLOVE	1	
			ATTACHING PARTS		
- 32	S-1021Z-6-6		SCREW CESSNA STANDARD	4	
			---*---		
- 33	0713009-2		CATCH-GLOVE BOX DOOR	1	
			ATTACHING PARTS		
- 34	AN515-6R6		SCREW	2	
- 35	AN960C6		WASHER	AR	
- 36	MS20365-632C		NUT	2	
			---*---		

CONTINUED ON PAGES 156, 157, & 158

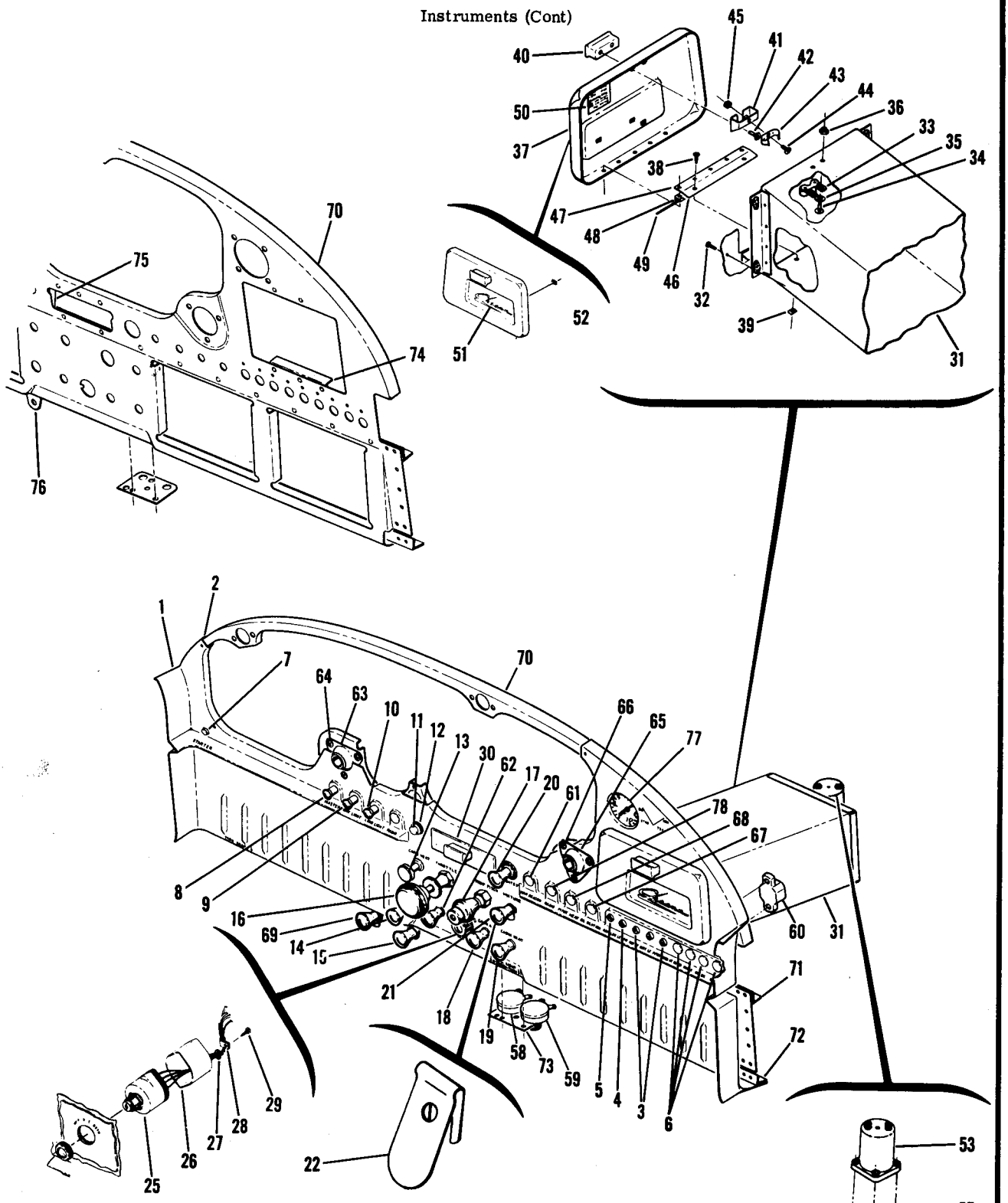

Figure 60. Stationary Instrument Panel Equipment Installation

FIGURE AND INDEX NO.	PART NUMBER	DESCRIPTION 1 2 3 4 5 6 7	UNITS PER ASSY	USABLE ON CODE
60- 37	0713214-10	DOOR ASSEMBLY-GLOVE BOX	1	H
	0713214-25	DOOR ASSEMBLY-GLOVE BOX	1	B
	0713214-32	DOOR ASSEMBLY-GLOVE BOX	1	J
		ATTACHING PARTS		
- 38	S-1021Z-6-6	SCREW CESSNA STANDARD	2	
- 39	NAS446-2-3	NUT TIN A1181-6Z-3	2	
		---*---		
- 40	0713201-17	KNOB-GLOVE BOX DOOR	1	
- 41	0713214-15	BRACKET	1	
		ATTACHING PARTS		
- 42	AN515-6R6	SCREW	2	
		---*---		
- 43	0713009-1	CLIP-GLOVE BOX DOOR	1	
		ATTACHING PARTS		
- 44	AN515-6R4	SCREW	1	
- 45	MS20365-632C	NUT	1	
		---*---		
- 46	0713214-9	CLIP-DOOR HINGE	1	
- 47	0713214-17	HINGE HALF-UPPER	1	
- 48	0713214-19	HINGE HALF-LOWER	1	
- 49	0713214-20	PIN-HINGE	1	
- 50	0713210-11	PLACARD-TIRE & OIL PRESSURE	1	B
	0713210-9	PLACARD-TIRE & OIL PRESSURE	1	H
- 51	0713213	PLACARD	1	
		ATTACHING PARTS		
- 52	A1553-012-3	NUT TIN	3	
		---*---		
- 53	0511062-10	HORN ASSEMBLY-STALL WARNING INDICATOR	1	
		ATTACHING PARTS		
- 54	AN515B6R12	SCREW	4	
		---*---		
- 55	0313313-3	BRACKET	1	
		ATTACHING PARTS		
- 56	S-1021Z-8-6	SCREW CESSNA STANDARD	2	
- 57	NAS446-4-3	NUT TIN A1778-8Z-3	2	
		---*---		
- 58	0413126-4	RHEOSTAT ASSEMBLY-PANEL LIGHT WITH KNOB	1	
- 59	0413126-7	RHEOSTAT ASSEMBLY-PANEL LIGHT WITH KNOB	1	
- 60	CA-2	CIRCUIT BREAKER SPT FOR OIL DILTN & FLARES	1	
		ATTACHING PARTS		
	AN507-36R12	SCREW	2	
		---*---		
- 61	49265	STUD-TRIMOUNT UC	9	
		ATTACHING PARTS		
	AN960D10	WASHER	9	
		---*---		
- 62	0713041	CONTROL-COWL FLAPS	1	B
- 63	0411225	SOCKET LH	2	K
	0411225	SOCKET LH	1	L
	0513146-9	COLLAR LH ONLY	1	N
	0513146-3	COLLAR-----LH ONLY	1	M
	0411224	BALL-CONTROL TUBE	1	
		ATTACHING PARTS		
- 64	AN515-6R8	SCREW	3	
	AN960-6L	WASHER	AR	
	MS20365-632C	NUT	3	
		---*---		
- 65	0411225	SOCKET RH	1	
	0411224	BALL-CONTROL TUBE RH	1	
		ATTACHING PARTS		
- 66	AN515-6R8	SCREW	3	
	AN960-6L	WASHER	AR	
	MS20365-632C	NUT	3	
		---*---		
- 67	0511063	SWITCH-OIL DILUTION	1	
		ATTACHING PARTS		
		NUT	NP	
		---*---		

CONTINUED ON PAGE 158

FIGURE AND INDEX NO.	PART NUMBER	DESCRIPTION 1 2 3 4 5 6 7	UNITS PER ASSY	USABLE ON CODE
60- 68	0713026-4	SWITCH-PITOT HEATER	1	
	0411092-1	KNOB	1	
- 69	0411090-22	CONTROL-WINTERIZATION-----REF 0411090-22---------- SEE FIGURES 81 & 81A	1	
- 70	0713214-3	PANEL ASSEMBLY-STATIONARY	1	
- 71	0713214-1	STIFFENER	1	
- 72	0713214-2	STIFFENER	1	
- 73	0413131-3	BRACKET-RHEOSTAT MOUNTING	1	
- 74	0713214-12	ANGLE-LOWER	1	
	0713214-11	ANGLE-UPPER	1	
- 75	0713214-13	BRACKET-ASH RECEIVER	1	
- 76	0756001-4	SUPPORT-STRAINER DRAIN CONTROL	1	
- 77	0311057-1	GAGE-SUCTION WHEN EXHAUSTED USE S-1300N1	1	
	S-1300N1	GAGE-SUCTION CESSNA STANDARD	1	
		ATTACHING PARTS		
	AN515B6R	SCREW	4	
	MS20365B632C	NUT	4	
		---*---		
- 78	0716128-28	SWITCH-AUXILIARY FUEL	1	
	0716128-31	PLACARD	1	
- 79	0716128-29	PLACARD-AUXILIARY FUEL	1	

A---180 SERIAL 32662 THRU 50355
182 SERIAL 33843 THRU 51556
B---180 SERIAL 32662 THRU 50355
C---182 SERIAL 33843 THRU 51556
D---180 SERIAL 32662 THRU 50263
182 SERIAL 33843 THRU 51224
E---180 SERIAL 50263 THRU 50355
182 SERIAL 51224 THRU 51556
F---180 SERIAL 32662 THRU 32867
182 SERIAL 33843 THRU 34211
G---180 SERIAL 32868 THRU 50355
182 SERIAL 34212 THRU 51556
H---182 SERIAL 33843 THRU 51556
J---182 SKYLANE SERIAL 34754 THRU 51556
K---180 SERIAL 32662 THRU 50106
182 SERIAL 33843 THRU 34753
L---180 SERIAL 50106 THRU 50355
182 SERIAL 34754 THRU 51556
M---180 SERIAL 50106 THRU 50313
182 SERIAL 34754 THRU 51407
N---180 SERIAL 50314 THRU 50355
182 SERIAL 51408 THRU 51556

NOTE. * CASCO PARTS ARE NO LONGER AVAILABLE. FOR REPLACEMENT ORDER COMPLETE CUNO ASSEMBLY, 0513039-7 & RESPECTIVE KNOB

NOTE. FOR ACCESSORY KIT LISTINGS REFER TO PAGES 372 THRU 374B

NOTE: FOR STATIONARY INSTRUMENT PANELS AND EQUIPMENT 180 SERIALS 50356 & ON, AND 182 SERIALS 51557 & ON. SEE FIGURES 63 & 63A.

FIGURE AND INDEX NO.	PART NUMBER	DESCRIPTION 1 2 3 4 5 6 7	UNITS PER ASSY	USABLE ON CODE
61-		PANEL INSTALLATION & ASSEMBLY-SHOCK MOUNTED	NP	A
- 1	0713200-2	PANEL-SHOCK MOUNTED	1	
		ATTACHING PARTS		
- 2	0413247	STRAP-GROUND	4	
- 3	0411059-1	MOUNT-SHOCK	6	
- 4	S-355	SPACER-----CESSNA STANDARD	6	
- 5	AN936A8R	WASHER	12	
- 6	AN340B8	NUT	12	
		---*---		
- 7	0713200-27	COVER-SHOCK PANEL	1	
- 8	0713200-37	COVER ASSEMBLY-SHOCK PANEL	1	
		ATTACHING PARTS		
- 9	49265-F-938	FASTENER UC	7	
		---*---		
- 10	0713213	INSIGNIA-CESSNA	1	
		ATTACHING PARTS		
	NAS482-2-3	NUT TIN A1553-012-3	3	
		---*---		
- 11	0713028-1	RETAINER-COMPASS CARD	1	
		ATTACHING PARTS		
	AN515-6R4	SCREW	2	
		---*---		
- 12	0713028-8	CARD-COMPASS	1	
	0713028-3	COVER-COMPASS CARD		
- 13	0450017-9	SHAFT-TACHOMETER DRIVE	1	B
	0450017-11	SHAFT-TACHOMETER DRIVE	1	C
- 14	0500106-92	LINE-MANIFOLD PRESSURE GAGE	1	
		ATTACHING PARTS		
- 15	AN816-2D	NIPPLE	1	
- 16	AN816-2B	NIPPLE	1	
		---*---		
- 17	AN833-2D	ELBOW	1	
		ATTACHING PARTS		
- 18	AN924-2D	NUT	1	
- 19	AN960D516	WASHER	2	
		---*---		
- 20	0500106-107	LINE-MANIFOLD PRESSURE GAGE	1	D
	0500106-199	LINE-MANIFOLD PRESSURE GAGE	1	E
- 21	0411007-7	ALTIMETER WHEN EXHAUSTED USE S-1314N1	1	
	S-1314N1	ALTIMETER	1	
	0411007-8	ALTIMETER-SENSITIVE WHEN EXHAUSTED USE S-1313N1	1	
	S-1313N1	ALTIMETER-SENSITIVE	1	
		ATTACHING PARTS		
- 22	AN515B6R	SCREW	4	
	MS20365B632C	NUT	4	
		---*---		
- 23	0411086-13	INDICATOR-AIR SPEED	1	
	0411086-14	INDICATOR-AIRSPEED-AMPHIBIAN WHEN EXHAUSTED USE S-1324N2	1	M
	S-1324N2	INDICATOR-AIRSPEED-AMPHIBIAN	1	M
		ATTACHING PARTS		
	AN515B6R	SCREW	4	
	MS20365B632C	NUT	4	
		---*---		
- 24	0411008-2	COMPASS	1	
		ATTACHING PARTS		
	AN515B6R	SCREW	8	
	MS20365B632C	NUT	8	
- 25	0411897-3	ADAPTER	1	
		---*---		
- 26	0311029-6	GAGE-MANIFOLD PRESSURE WHEN EXHAUSTED USE S-1301N2	1	F
	S-1301N2	GAGE-MANIFOLD PRESSURE	1	F
	0311029-7	GAGE-MANIFOLD PRESSURE WHEN EXHAUSTED USE S-1301N1	1	G
	S-1301N1	GAGE-MANIFOLD PRESSURE	1	G
		ATTACHING PARTS		
	AN515B6R	SCREW	4	
	MS20365B632C	NUT	4	
		---*---		
- 27	0411087-24	TACHOMETER WHEN EXHAUSTED USE S-1323N2	1	B
	S-1323N2	TACHOMETER	1	B
	0311014-9	TACHOMETER	1	H
	0311014-7	TACHOMETER	1	J
		ATTACHING PARTS		
	AN515B6R	SCREW	4	
	MS20365B632C	NUT	4	
		---*---		

180 SERIAL 30000 THRU 32661
182 SERIAL 33000 THRU 33842

S-PART NOS APPEARING ON THIS PAGE ARE CESSNA STANDARD

CONTINUED ON PAGES 161 & 162

Instruments (Cont)

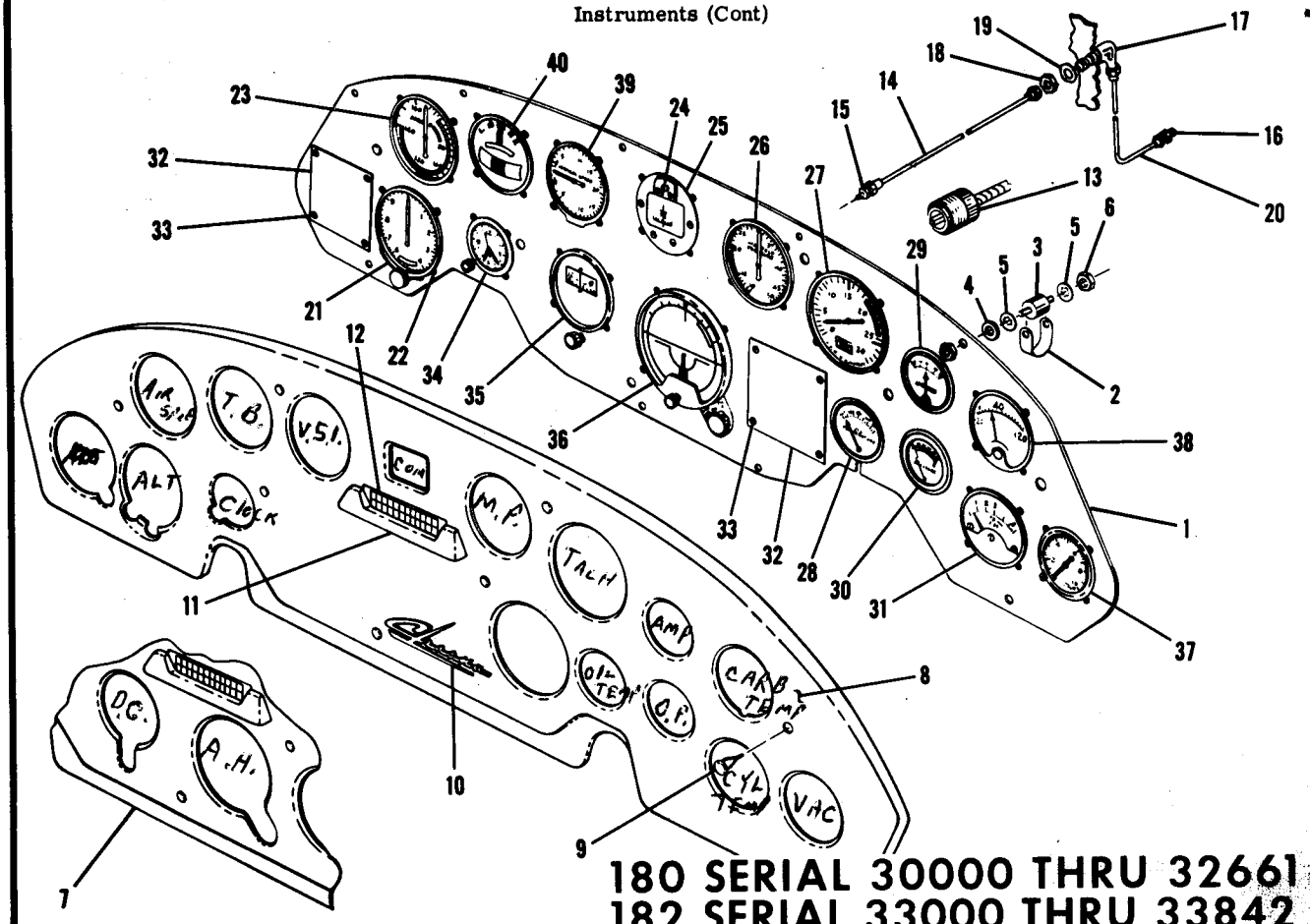

Figure 61. Shock Mounted Instrument Panel Assembly and Installation

FIGURE AND INDEX NO.	PART NUMBER	DESCRIPTION 1 2 3 4 5 6 7	UNITS PER ASSY	USABLE ON CODE
61- 28	0411017-4	GAGE-OIL TEMPERATURE	1	
		ATTACHING PARTS		
	AN515B6R	SCREW	4	
	MS20365B632C	NUT	4	
		---*---		
- 29	0713038	AMMETER WHEN EXHAUSTED USE S-1320-1	1	
	S-1320-1	AMMETER CESSNA STANDARD	1	
		ATTACHING PARTS		
	AN515B6R	SCREW	4	
	MS20365B632C	NUT	4	
		---*---		
- 30	0411016-3	GAGE-OIL PRESSURE	1	
		ATTACHING PARTS		
	AN515B6R	SCREW	4	
	MS20365B632C	NUT	4	
		---*---		

CONTINUED ON PAGE 162

FIGURE AND INDEX NO.	PART NUMBER	DESCRIPTION 1 2 3 4 5 6 7	UNITS PER ASSY	USABLE ON CODE
61- 31	0511068	GAGE-CYLINDER HEAD TEMPERATURE	1	K
	0511068-2	GAGE-CYLINDER HEAD TEMPERATURE	1	L
		ATTACHING PARTS		
	AN515B6R	SCREW	4	
	MS20365B632C	NUT	4	
		---*---		
	0311018-10	LEAD-CYLINDER HEAD TEMPERATURE GAGE	1	
- 32	0713200-4	COVER PLATE	AR	
	0713200-7	COVER PLATE	AR	
		ATTACHING PARTS		
- 33	99608	FASTENER UC	AR	
		---*---		
- 34	0411010-3	CLOCK	1	
		ATTACHING PARTS		
	AN515B6R	SCREW	4	
	MS20365B632C	NUT	4	
		---*---		
- 35	0311056-5	GYRO-DIRECTIONAL	1	
		ATTACHING PARTS		
	AN515B6R	SCREW	4	
	MS20365B632C	NUT	4	
		---*---		
- 36	0311058-1	GYRO-HORIZON	1	
		ATTACHING PARTS		
	AN515B6R	SCREW	4	
	MS20365B632C	NUT	4	
		---*---		
- 37	0311057-1	GAGE-SUCTION WHEN EXHAUSTED USE S-1300N1	1	
	S-1300N1	GAGE-SUCTION	1	
		ATTACHING PARTS		
	AN515B6R	SCREW	4	
	MS20365B632C	NUT	4	
		---*---		
- 38	0311020-8	GAGE-CARBURETOR AIR TEMPERATURE	1	
		ATTACHING PARTS		
	AN515B6R	SCREW	4	
	MS20365B632C	NUT	4	
		---*---		
- 39	0411069-3	INDICATOR-VERTICAL SPEED WHEN EXHAUSTED USE S-1304N1	1	
	S-1304N1	INDICATOR-VERTICAL SPEED	1	
		ATTACHING PARTS		
	AN515B6R	SCREW	4	
	MS20365B632C	NUT	4	
		---*---		
- 40	0411009-6	INDICATOR-TURN & BANK-----WHEN EXHAUSTED USE S-1302N1	1	
	S-1302N1	INDICATOR-TURN & BANK	1	
		ATTACHING PARTS		
	AN515B6R	SCREW	4	
	MS20365B632C	NUT	4	
		---*---		

A---180 SERIAL 30000 THRU 32661
182 SERIAL 33000 THRU 33842
B---180 SERIAL 30000 THRU 30265
C---180 SERIAL 30266 THRU 32661
182 SERIAL 33000 THRU 33842
D---180 SERIAL 30000 THRU 32661
E---182 SERIAL 33000 THRU 33842
F---180 SERIAL 30000 THRU 31260
G---180 SERIAL 31261 THRU 32661
182 SERIAL 33000 THRU 33842
H---180 SERIAL 31261 THRU 32150
J---180 SERIAL 30266 THRU 31260 & 32151 THRU 32661
182 SERIAL 33000 THRU 33842
K---180 SERIAL 30000 THRU 32150
L---180 SERIAL 32151 THRU 32661
182 SERIAL 33000 THRU 33842
M---180 SERIAL 31261 THRU 32661
NOTE• FOR ACCESSORY KIT LISTINGS REFER TO
PAGES 372 THRU 374B
S-PART NOS APPEARING ON THIS PAGE ARE CESSNA STANDARD

FIGURE AND INDEX NO.	PART NUMBER	DESCRIPTION	UNITS PER ASSY	USABLE ON CODE
		1 2 3 4 5 6 7		
62-		PANEL ASSEMBLY & INSTALLATION-SHOCK MOUNTED INSTRUMENT ----	NP	A
- 1	0713214-4	PANEL-SHOCK---------- 182 SERIAL -----	1	B
- 2	0713214-28	PANEL-SHOCK---------- 182 SERIAL -----	1	C
		ATTACHING PARTS 33843 THRU 51556		
- 3	0413247	STRAP-GROUND -------- 33843 THRU 51556	1	
- 4	102PLDN-4	MOUNT-SHOCK-----LO ---------- 180 SERIAL -----	3	
	102PLDN-8 *	MOUNT-SHOCK-----LO ---------- 180 SERIAL -----	3	
- 5	AN515B6-6	SCREW ---------- 32662 THRU 50355	2	
- 6	MS20365B632C	NUT ---------- 32662 THRU 50355	2	
- 7	AN515B8-32	SCREW ---------- 32662 THRU 50355	1	
	AN515B8-20	SCREW TOP RIGHT MOUNT ONLY---------- 32662 THRU 50355	1	
	AN515B8-16	SCREW LOWER MOUNT ONLY---------- 32662 THRU 50355	1	
- 8	NAS43DD3-50	SPACER---------- 32662 THRU 50355	1	
	NAS43DD3-32	SPACER-----TOP RIGHT MOUNT ONLY ---------- 32662 THRU 50355	1	
	NAS43DD3-20	SPACER-----LOWER MOUNT ONLY ---------- 32662 THRU 50355	1	
- 9	J2049-1D	WASHER-----LO ---------- 32662 THRU 50355	3	
- 10	MS20365B832C	NUT ---------- 32662 THRU 50355	3	
		---*---		
- 11	0713214-5	COVER ASSEMBLY-SHOCK PANEL---------- 182 SERIAL -----	1	B
- 12	0713214-29	COVER ASSEMBLY-SHOCK PANEL---------- 182 SERIAL -----	1	C
		ATTACHING PARTS		
- 13	49265F-938	FASTENER UC ---------- 182 SERIAL -----	5	
		---*---		
- 14	0713064-2	RETAINER-COMPASS CARD ---------- 182 SERIAL -----	1	
		ATTACHING PARTS		
	AN515-6R3	SCREW ---------- 182 SERIAL -----	2	
		---*---		
- 15	0713028-8	CARD-COMPASS ---------- 182 SERIAL -----	1	
	0713028-3	COVER-COMPASS CARD ---------- 182 SERIAL -----	1	
- 16	0450017-11	SHAFT-TACHOMETER---------- 182 SERIAL -----	1	
		ATTACHING PARTS		
	A2981A4-27	CLAMP TIN ---------- 182 SERIAL -----	1	
	S-1021Z-8-6	SCREW CESSNA STANDARD ---------- 182 SERIAL -----	1	
		---*---		
- 17	0500106-92	LINE-MANIFOLD PRESSURE GAGE ---------- 182 SERIAL -----	1	
- 18	0411086-16	INDICATOR-AIRSPEED WHEN EXHAUSTED USE S-1324N3---------- 182 SERIAL -----	1	
	S-1324N3	INDICATOR-AIRSPEED ---------- 182 SERIAL -----	1	
	0411086-17	INDICATOR-AIRSPEED-AMPHIBIAN WHEN EXHAUSTED USE S-1324N2	1	D
	0411086-23	INDICATOR-AIRSPEED-AMPHIBIAN ALT WHEN EXHAUSTED----	1	D
		USE S-1324N2		
	S-1324N2	INDICATOR-AIRSPEED-AMPHIBIAN ---------- 182 SERIAL -----	1	D
		ATTACHING PARTS		
- 19	AN515B6R16	SCREW ---------- 182 SERIAL -----	4	
	MS20365B632C	NUT ---------- 182 SERIAL -----	4	
		---*---		
- 20	0411007-7	ALTIMETER WHEN EXHAUSTED USE S-1314N1 ---------- 182 SERIAL -----	1	F
	S-1314N1	ALTIMETER ---------- 182 SERIAL -----	1	F
	0411007-8	ALTIMETER-SENSITIVE WHEN EXHAUSTED USE S-1313N1 ----	1	F
	0411007-10	ALTIMETER-SENSITIVE WHEN EXHAUSTED USE S-1313N1 ----	1	F
	S-1313N1	ALTIMETER-SENSITIVE ---------- 182 SERIAL -----	1	F
		ATTACHING PARTS		
	AN515B6R16	SCREW ---------- 182 SERIAL -----	4	
	MS20365B632C	NUT ---------- 182 SERIAL -----	4	
		---*---		
- 21		PANEL ASSEMBLY-INSTRUMENT ---------- 182 SERIAL -----	NP	B
- 22		PANEL ASSEMBLY-INSTRUMENT ---------- 182 SERIAL -----	NP	C
		ATTACHING PARTS		
	AN515B6R	SCREW ---------- 182 SERIAL -----	AR	
	MS20365B632C	NUT ---------- 182 SERIAL -----	AR	
		---*---		
- 23	0713062-2	GAGE-MANIFOLD PRESSURE ---------- 182 SERIAL -----	1	B
- 24	0713062-7	TACHOMETER ---------- 182 SERIAL -----	1	B
- 25	0311014-21	ANGLE ADAPTER-TACHOMETER---------- 182 SERIAL -----	1	B
- 26	0713062-3	GAGE-OIL TEMPERATURE ---------- 182 SERIAL -----	1	B
- 27	0513144-2	GAGE-OIL TEMPERATURE ---------- 182 SERIAL -----	1	C
	0713062-4	GAGE-OIL PRESSURE ---------- 182 SERIAL -----	1	B
- 28	0513144-9	GAGE-OIL PRESSURE ---------- 182 SERIAL -----	1	C
- 29	0713062-5	GAGE-FUEL LH ---------- 182 SERIAL -----	1	B
- 30	0713062-6	GAGE-FUEL RH ---------- 182 SERIAL -----	1	B
- 31	0713062-6	GAGE-FUEL---------- 182 SERIAL -----	2	C
- 32	0513144-4	CASE-INSTRUMENT ---------- 182 SERIAL -----	1	C
- 33	0311014-7	TACHOMETER ---------- 182 SERIAL -----	1	C
		ATTACHING PARTS		
	AN515B6R8	SCREW ---------- 182 SERIAL -----	4	
	MS20365B632C	NUT ---------- 182 SERIAL -----	4	
		---*---		
		S-PART NOS APPEARING ON THIS PAGE ARE CESSNA STANDARD		
		CONTINUED ON PAGES 164 & 165		

Instruments (Cont)

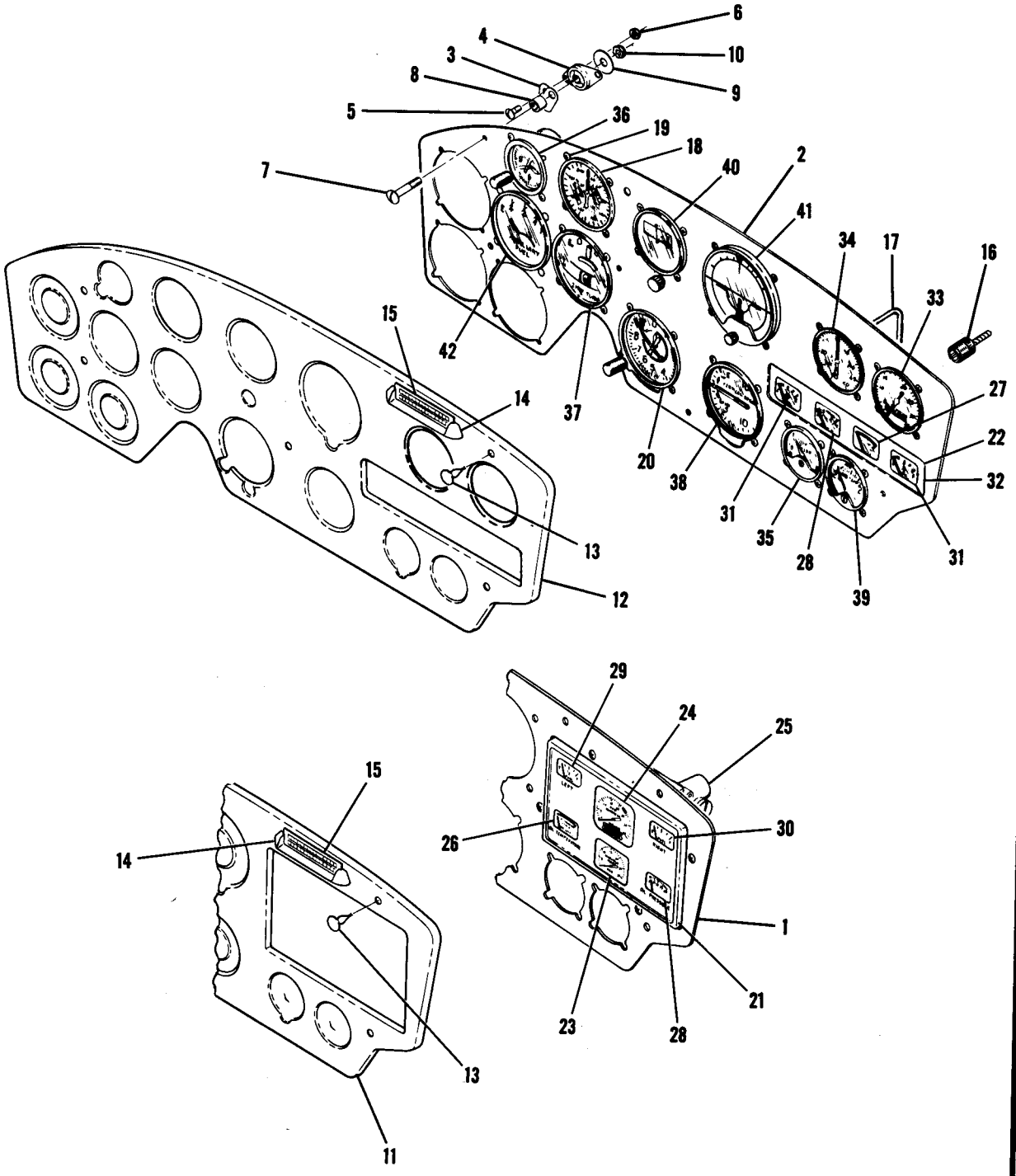

180 SERIAL 32662 THRU 50355
182 SERIAL 33843 THRU 51556

Figure 62. Shock Mounted Instrument Panel Assembly and Installation

FIGURE AND INDEX NO.	PART NUMBER	DESCRIPTION 1 2 3 4 5 6 7	UNITS PER ASSY	USABLE ON CODE
62- 34	0311029-7	GAGE-MANIFOLD PRESSURE WHEN EXHAUSTED USE S-1301N1 ----	1	C
	S-1301N1	GAGE-MANIFOLD PRESSURE	1	C
		ATTACHING PARTS		
	AN515B6R16	SCREW	4	
	MS20365B632C	NUT	4	
		---*---		
- 35	0511068-2	GAGE-CYLINDER HEAD TEMPERATURE	1	F
		ATTACHING PARTS		
	AN515R6R12	SCREW	4	
	MS20365B632C	NUT	4	
		---*---		
	0311018-10	LEAD-CYLINDER HEAD TEMPERATURE GAGE	1	F
- 36	0411010-1	CLOCK	1	F
		ATTACHING PARTS		
	AN515B6R10	SCREW	4	
	MS20365B632C	NUT	4	
		---*---		
- 37	0411009-6	INDICATOR-TURN & BANK-----WHEN EXHAUSTED USE S-1302N1 ----	1	F
	S-1302N1	INDICATOR-TURN & BANK	1	F
		ATTACHING PARTS		
	AN515B6R16	SCREW	4	
	MS20365B632C	NUT	4	
		---*---		
- 38	0411069-1	INDICATOR-VERTICAL SPEED WHEN EXHAUSTED USE S-1304N2	1	F
	S-1304N2	INDICATOR-VERTICAL SPEED	1	F
		ATTACHING PARTS		
	AN515B6R16	SCREW	4	
	MS20365B632C	NUT	4	
		---*---		
- 39	0311020-8	GAGE-CARBURETOR AIR TEMPERATURE	1	
		ATTACHING PARTS		
	AN515B6R12	SCREW	4	
	MS20365B632C	NUT	4	
		---*---		
- 40	0311056-4	GYRO-DIRECTIONAL-REBUILT WHEN EXHAUSTED USE S-1316N1	1	
	S-1316N1	GYRO-DIRECTIONAL-REBUILT	1	
	0311056-5	GYRO-DIRECTIONAL-----NEW	1	
		ATTACHING PARTS		
	AN520B10R16	SCREW	4	
	MS20365B632C	NUT	4	
		---*---		
- 41	0311058-4	GYRO-HORIZON NEW	1	
	0311058-5	GYRO-HORIZON-REBUILT WHEN EXHAUSTED USE S-1309N1 ----	1	
	S-1309N1	GYRO-HORIZON-REBUILT	1	
		ATTACHING PARTS		
	AN520B10R16	SCREW	4	
	MS20365B632C	NUT	4	
		---*---		
- 42	0716128-30	GAGE-AUXILIARY FUEL	1	
		ATTACHING PARTS		
	AN515B6R12	SCREW	4	
	MS20365B632C	NUT	4	
		---*---		

A---180 SERIAL 32662 THRU 50355
182 SERIAL 33843 THRU 51556
B---180 SERIAL 32662 THRU 50105
182 SERIAL 33843 THRU 34753
C---180 SERIAL 50106 THRU 50355
182 SERIAL 34754 THRU 51556
D---180 SERIAL 32662 THRU 50355
E---182 SERIAL 33843 THRU 51556
F---180 SERIAL 32662 THRU 50355
182 SERIAL 33843 THRU 51556
*NOTE. USE WITH SHOCK PANEL ASSEMBLY WEIGHING MORE THAN 18 POUNDS
NOTE. FOR ACCESSORY KIT LISTINGS REFER TO PAGES 372 THRU 374B
S-PART NOS APPEARING ON THIS PAGE ARE CESSNA STANDARD

Instruments (Cont)

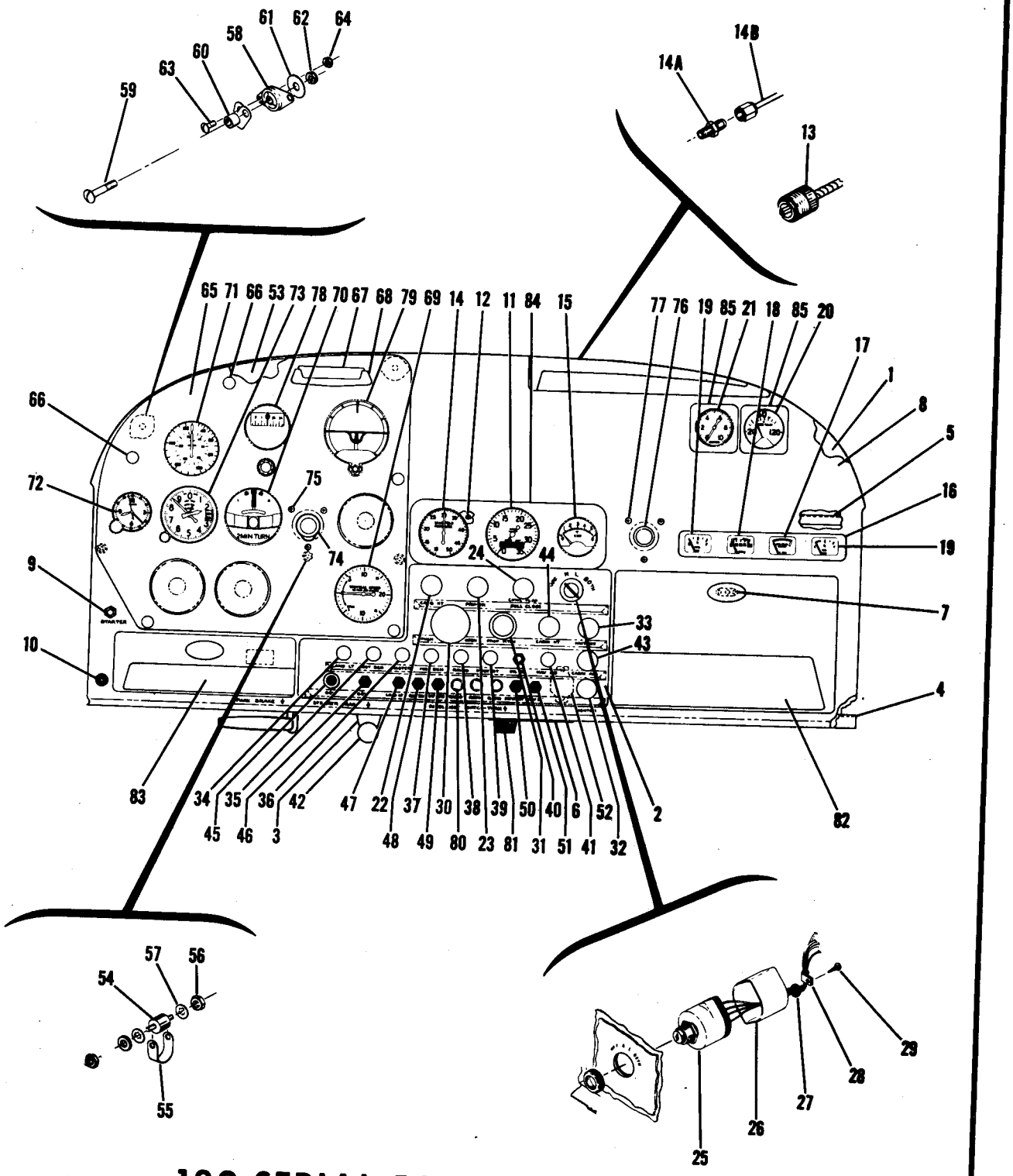

180 SERIAL 50356 THRU 50911
182 SERIAL 51557 THRU 53007

Figure 63. Instrument Panel Equipment Installation and Assembly

FIGURE AND INDEX NO.	PART NUMBER	DESCRIPTION 1 2 3 4 5 6 7	UNITS PER ASSY	USABLE ON CODE
63-		EQUIPMENT INSTALLATION & ASSEMBLY-INSTRUMENT PANEL	NP	A
- 1	0713501-1	PANEL ASSEMBLY-STATIONARY	1	
- 2	0713501-3	PAN-INSTRUMENT PANEL	1	
- 3	0756001-4	SUPPORT-CONTROL	1	
- 4	0713501-4	STIFFENER	1	
- 5	0713501-5	STIFFENER	1	
- 6	0413131-3	BRACKET-RHEOSTAT	1	
- 7	A1663-017-1	CATCH-SPRING TIN	1	
- 8	0713502-3-279	COVER-STATIONARY PANEL	1	D
	0713502-7-279	COVER-STATIONARY PANEL	1	C
	0713502-5-279	COVER-STATIONARY PANEL	1	B
		ATTACHING PARTS		
	S-1021Z-4-4B	SCREW CESSNA STANDARD	5	
		---*---		
	A-36	INITIALS STATE LETTERS WANTED-----AAAH	7	B
- 9	0511063	SWITCH-STARTER	1	
		ATTACHING PARTS		
		NUT	NP	
		---*---		
- 10	S-1102-1	JACK-MICROPHONE CESSNA STANDARD	1	
- 11	0311014-7	TACHOMETER	1	
		ATTACHING PARTS		
- 12	AN507B632R12	SCREW	4	
	MS20365B632C	NUT	4	
		---*---		
- 13	0450017-10	SHAFT-TACHOMETER	1	
		ATTACHING PARTS		
	2981A-4-27	CLAMP TIN	1	
	S-1021Z-8-6	SCREW CESSNA STANDARD	1	
		---*---		
- 14	0311029-7	GAGE-MANIFOLD PRESSURE WHEN EXHAUSTED USE S-1301N1	1	
	S-1301N1	GAGE-MANIFOLD PRESSURE CESSNA STANDARD	1	
		ATTACHING PARTS		
	AN507B632R12	SCREW	4	
	MS20365B632C	NUT	4	
		---*---		
-14A	AN816-2D	NIPPLE	1	
-14B	0500106-256	LINE ASSEMBLY-MANIFOLD PRESSURE GAGE TO FIREWALL	1	H
	0500106-273	LINE ASSEMBLY-MANIFOLD PRESSURE GAGE TO FIREWALL	1	J
- 15	0511068-2	GAGE CYLINDER HEAD TEMP	1	K
	0511068-6	GAGE-CYLINDER HEAD TEMP WHEN EXHAUSTED USE S-1307N2	1	L
	S-1307N2	GAGE-CYLINDER HEAD TEMP CESSNA STANDARD	1	L
		ATTACHING PARTS		
	AN507B632R12	SCREW	4	
	MS20365B632C	NUT	4	
		---*---		
	0311018-10	LEAD-CYLINDER HEAD TEMPERATURE GAGE	1	
- 16	0513144-1	PANEL ASSEMBLY	1	F
	0513144-11	PANEL ASSEMBLY	1	G
		ATTACHING PARTS		
	AN507B632R12	SCREW	2	
	MS20365B632C	NUT	2	
		---*---		
- 17	0513144-2	GAGE-OIL TEMPERATURE	1	
- 18	0513144-9	GAGE-OIL PRESSURE ELECTRIC	1	F
	0513144-10	GAGE-OIL PRESSURE DIRECT PRESSURE	1	G
- 19	0713062-6	GAGE-FUEL	2	
	0716128-30	GAGE-AUXILIARY FUEL	1	
- 20	0311020-8	GAGE-CARBURETOR AIR TEMPERATURE	1	
	SP1101	GAGE-CARBURETOR AIR TEMPERATURE STAA-----ALT	1	
		ATTACHING PARTS		
	AN507B632R12	SCREW	4	
	MS20365B632C	NUT	4	
		---*---		
	0713209-1	PLACARD-CARBURETOR AIR TEMPERATURE INDICATOR	1	
- 21	0311057-1	GAGE-SUCTION WHEN EXHAUSTED USE S-1300N1	1	
	S-1300N1	GAGE-SUCTION CESSNA STANDARD	1	
		ATTACHING PARTS		
	AN507B632R12	SCREW	4	
	MS20365B632C	NUT	4	
		---*---		
- 22	0713050-2	CONTROL-CARBURETOR HEAT	1	C
	0713302-5	CONTROL-CARBURETOR HEAT REF 0713302-3	1	D
- 23	0311538-10	PRIMER ASSEMBLY-ENGINE	1	
	S-1240-5	KNOB-----CESSNA STANDARD	1	
- 24	0713306-1	CONTROL-COWL FLAP	1	D
	0713041-1	CONTROL-COWL FLAP	1	C

CONTINUED ON PAGES 168, 169, & 170

180 SERIAL 50356 THRU 50911
182 SERIAL 51557 THRU 53007

FIGURE AND INDEX NO.	PART NUMBER		DESCRIPTION 1 2 3 4 5 6 7	UNITS PER ASSY	USABLE ON CODE
63- 25	0311038-2		SWITCH-IGNITION	1	
- 26	0311777		SHIELD ASSEMBLY	1	
- 27	MS35489-6		GROMMET	1	
- 28	AN742-D4		CLAMP	1	
			ATTACHING PARTS		
- 29	S-10212-6-6		SCREW CESSNA STANDARD	1	
			---*---		
- 30	S-1222-1		CONTROL-THROTTLE	1	
- 31	0311031-5		CONTROL-PROPELLER	1	
- 32	0513039-7	*	LIGHTER-CIGAR CUNO	1	
	32	*	SOCKET ASSEMBLY CUNO	1	
	34	*	TRIM CUP CUNO	1	
	33	*	HEATING ELEMENT CUNO	1	
	S-1240-6		KNOB-CIGAR LIGHTER	1	
- 33	0713050-2		CONTROL-MIXTURE	1	
- 34	0713035		SWITCH-LANDING LIGHT	1	
	0713303-2		KNOB	1	
- 35	0713026-4		SWITCH-ROTATING BEACON SINGLE POLE	1	
	0713026-9		SWITCH-ROTATING BEACON DOUBLE POLE	1	
	0713303-2		KNOB-ROTATING BEACON SWITCH	1	
- 36	0713026-5		SWITCH-MASTER	1	
	0713303-2		KNOB	1	
- 37	0713026-7		SWITCH-MARKER BEACON	1	
	0411092-1		KNOB	1	
	0716128-28		SWITCH-AUXILIARY FUEL	1	
- 38	0713026-5		SWITCH-RADIO	1	
	0411092-1		KNOB	1	
- 39	0713026-4		SWITCH-PITOT HEAT	1	
	0713303-2		KNOB	1	
- 40	0511063		SWITCH-OIL DILUTION	1	
			ATTACHING PARTS		
			NUT	NP	
			---*---		
- 41	0713026-4		SWITCH-NAVIGATION LIGHT SINGLE POLE	1	
	0713026-9		SWITCH-NAVIGATION LIGHT DOUBLE POLE	1	
	0713303-2		KNOB	1	
- 42	S-1239-4		CONTROL-STRAINER DRAIN REF 0713302-4	1	
	S-1239-3		CONTROL-STRAINER DRAIN FLOATPLANE C.P.	1	
- 43	0713302-6		CONTROL-CABIN AIR REF 0713302-2	1	
- 44	0713302-5		CONTROL-CABIN HEAT REF 0713302-1	1	
- 45	0513051-8		LIGHT ASSEMBLY-CHARGE INDICATOR	1	
	1816		BULB	1	
	0713038		AMMETER WHEN EXHAUSTED USE S-1320-1	1	
	S-1320-1		AMMETER	1	
			ATTACHING PARTS		
	0700036-2		ADAPTER	1	
	AN515-6R6		SCREW	4	
	MS20365-632C		NUT	4	
			---*---		
- 46	PSM35N		CIRCUIT BREAKER SPT	1	
	PDM-50		CIRCUIT BREAKER SPT	1	
- 47	PSM15N		CIRCUIT BREAKER SPT	1	
- 48	PSM10N		CIRCUIT BREAKER SPT	1	
- 49	PSM10N		CIRCUIT BREAKER SPT	1	
- 50	PSM10N		CIRCUIT BREAKER SPT	1	
- 51	PSM10N		CIRCUIT BREAKER SPT	1	
- 52	CA-2		CIRCUIT BREAKER SPT	1	
	PA-2		CIRCUIT BREAKER SPT ALT	1	
			ATTACHING PARTS		
	AN507-832R12		SCREW	2	
			---*---		
- 53	0713504-1		PANEL-SHOCK MOUNTED INSTRUMENT	1	F
	0713504-2		PANEL-SHOCK MOUNTED INSTRUMENT	1	G
			ATTACHING PARTS		
- 54	0411059-1		MOUNT-SHOCK	3	
- 55	0413247		STRAP-GROUND	1	
- 56	AN340B8		NUT	6	
- 57	AN936A8		WASHER	6	
	S-355		SPACER-----CESSNA STANDARD	3	
- 58	102PDLN-4		MOUNT-SHOCK-----LO	2	
- 59	AN515B8R20		SCREW	2	
- 60	NAS43DD-3-14		SPACER	2	
- 61	J2049-1D		WASHER-----LO	2	

S-PART NOS APPEARING ON THIS PAGE ARE CESSNA STANDARD

CONTINUED ON PAGES 169 & 170

FIGURE AND INDEX NO.	PART NUMBER	DESCRIPTION 1 2 3 4 5 6 7	UNITS PER ASSY	USABLE ON CODE
63- 62	MS20365B832C	NUT	2	
- 63	AN515B6R6	SCREW	4	
- 64	MS20365B632C	NUT	4	
		---*---		
- 65	0713502-1	COVER-SHOCK PANEL	1	F
	0713502-9	COVER-SHOCK PANEL	1	M
	0713502-10	COVER-SHOCK PANEL	1	N
		ATTACHING PARTS		
- 66	49265F-52	FASTENER VC	5	
		---*---		
- 67	0713028-8	CARD-CORRECTION	1	
	0713028-3	COVER-CORRECTION CARD	1	
- 68	0713064-2	RETAINER-COMPASS CARD	1	
		ATTACHING PARTS		
	A109-014-3	NUT TIN	2	
		---*---		
- 69	0411069-1	INDICATOR-VERTICAL SPEED WHEN EXHAUSTED USE S-1304N2	1	
	S-1304N2	INDICATOR-VERTICAL SPEED	1	
	0411069-3	INDICATOR-VERTICAL SPEED WHEN EXHAUSTED USE S-1304N1	1	
	S-1304N1	INDICATOR-VERTICAL SPEED	1	
		ATTACHING PARTS		
	AN515B6R12	SCREW	4	
	MS20365B632C	NUT	4	
		---*---		
	AN825-4D	TEE	1	
- 70	0411009-6	INDICATOR-TURN & BANK-----WHEN EXHAUSTED USE S-1302N1	1	
	S-1302N1	INDICATOR-TURN & BANK	1	
		ATTACHING PARTS		
	AN515B6R12	SCREW	4	
	MS20365B632C	NUT	4	
		---*---		
- 71	0411086-16	INDICATOR-AIRSPEED WHEN EXHAUSTED USE S-1324N3	1	
	0411086-21	INDICATOR-AIRSPEED-ALT WHEN EXHAUSTED USE S-1324N3	1	
	S-1324N3	INDICATOR-AIRSPEED	1	
	0411086-14	INDICATOR-AIRSPEED-AMPHIBIAN WHEN EXHAUSTED USE S-1324N2	1	P
	0411086-23	INDICATOR-AIRSPEED-AMPHIBIAN-ALT WHEN EXHAUSTED USE S-1324N2	1	P
	S-1324N2	INDICATOR-AIRSPEED-AMPHIBIAN	1	P
		ATTACHING PARTS		
	AN515-B6R	SCREW	4	
	MS20365B632C	NUT	4	
		---*---		
- 72	0411010-1	CLOCK	1	
		ATTACHING PARTS		
	AN515-B6R	SCREW	4	
	MS20365B632C	NUT	4	
		---*---		
- 73	0411007-7	ALTIMETER WHEN EXHAUSTED USE S-1314N1	1	
	S-1314N1	ALTIMETER 20,000 FT.	1	
	0411007-8	ALTIMETER-SENSITIVE WHEN EXHAUSTED USE S-1313N1	1	
	0411007-10	ALTIMETER-SENSITIVE WHEN EXHAUSTED USE S-1313N1	1	
	S-1313N1	ALTIMETER-SENSITIVE 35,000 FT.	1	
		ATTACHING PARTS		
	AN515-B6R	SCREW	4	
	MS20365B632C	NUT	4	
		---*---		
- 74	0513146-11	COLLAR-CONTROL TUBE LH	1	
	0411224	BALL-CONTROL TUBE LH	1	
	0713099-1	SOCKET-CONTROL TUBE LH	1	
		ATTACHING PARTS		
- 75	AN5156R8	SCREW	4	
	MS20365-632C	NUT	4	
	AN960-6L	WASHER	AR	
		---*---		
- 76	0713099-1	SOCKET-CONTROL TUBE RH	2	
	0411224	BALL-CONTROL TUBE RH	1	
		ATTACHING PARTS		
- 77	AN5156R8	SCREW	4	
	MS20365-632C	NUT	4	
	AN960-6L	WASHER	AR	
		---*---		
		S-PART NOS APPEARING ON THIS PAGE ARE CESSNA STANDARD		
		CONTINUED ON PAGE 170		

FIGURE AND INDEX NO.	PART NUMBER	DESCRIPTION 1 2 3 4 5 6 7	UNITS PER ASSY	USABLE ON CODE
63- 78	0311056-4	GYRO-DIRECTIONAL-----REBUILT WHEN EXHAUSTED USE S-1316N1	1	
	S-1316N1	GYRO-DIRECTIONAL-----REBUILT	1	
	0311056-5	GYRO-DIRECTIONAL-----NEW	1	
		ATTACHING PARTS		
	AN515-B6R	SCREW	4	
	MS20365B632C	NUT	4	
		---*---		
- 79	0311058-5	GYRO-HORIZON REBUILT WHEN EXHAUSTED USE S-1309N1	1	
	S-1309N1	GYRO-HORIZON REBUILT	1	
	0311058-4	GYRO-HORIZON NEW	1	
		ATTACHING PARTS		
	AN515-B6R	SCREW	4	
	MS20365B632C	NUT	4	
		---*---		
- 80	49265	PLUG BUTTON UC	AR	
- 81	0413126-7	RHEOSTAT ASSEMBLY	1	
- 82		GLOVE BOX INSTALLATION SEE FIGURE 64	1	
- 83		MAP CASE INSTALLATION-----SEE FIGURE 64	1	
- 84	0713208-2	ESCUTCHEON	1	
- 85	0713208-1	ESCUTCHEON	2	
	0713302-5	CONTROL-WINTERIZATION-----REF 0713302-5	1	0

A---180 SERIAL 50356 THRU 50911
182 SERIAL 51557 THRU 53007
B---182 SKYLANE SERIAL 51557 THRU 53007
C---180 SERIAL 50356 THRU 50661
D---180 SERIAL 50662 THRU 50911
182 SERIAL 51557 THRU 53007
F---180 SERIAL 50356 THRU 50661
182 SERIAL 51557 THRU 52358
G---180 SERIAL 50662 THRU 50911
182 SERIAL 52359 THRU 53007
H---180 SERIAL 50356 THRU 50439
182 SERIAL 51557 THRU 51782
J---180 SERIAL 50440 THRU 50911
182 SERIAL 51783 THRU 53007
K---180 SERIAL 50356 THRU 50819
182 SERIAL 51557 THRU 52843
L---180 SERIAL 50820 THRU 50911
182 SERIAL 52844 THRU 53007
M---180 SERIAL 50662 THRU 50668
182 SERIAL 52359 THRU 52451
N---180 SERIAL 50669 THRU 50911
182 SERIAL 52452 THRU 53007
O---180 SERIAL 50356 THRU 50497
182 SERIAL 51557 THRU 51982
P---180 SERIAL 50356 THRU 50911

NOTE. *CASCO PARTS ARE NO LONGER AVAILABLE. FOR REPLACEMENT ORDER COMPLETE CUNO ASSEMBLY, 0513039-7 & RESPECTIVE KNOB

NOTE. FOR ACCESSORY KIT LISTINGS REFER TO PAGES 372 THRU 374B

S-PART NOS APPEARING ON THIS PAGE ARE CESSNA STANDARD

FIGURE AND INDEX NO.	PART NUMBER		DESCRIPTION	UNITS PER ASSY	USABLE ON CODE
			1 2 3 4 5 6 7		
63A-			EQUIPMENT INSTALLATION & ASSEMBLY-INSTRUMENT PANEL	NP	A
- 1	0713125-1		PANEL ASSEMBLY-STATIONARY	1	J
	0713125-13		PANEL ASSEMBLY - STATIONARY	1	K
- 2	0713126-1		PAN	1	
- 3	0756001-4		SUPPORT-STRAINER DRAIN CONTROL	1	
- 4	0713501-4		STIFFENER	1	
- 5	0713501-5		STIFFENER	1	
- 6	0413131-3		BRACKET-RHEOSTAT	1	
- 7	0713127-1		BRACKET-FLAP CONTROL	2	
- 8	1213035-4		PLATE ASSEMBLY	1	
- 9	0713518-5-279		COVER-STATIONARY PANEL UPPER	1	J
	0713518-15-279		COVER - STATIONARY PANEL UPPER	1	K
	0713518-3-279		COVER-STATIONARY PANEL UPPER	1	B
- 10	0713518-1-279		COVER-STATIONARY PANEL LOWER	1	J
	0713518-14-279		COVER-STATIONARY PANEL LOWER	1	K
			ATTACHING PARTS		
	S-1021Z-4-6B		SCREW CESSNA STANDARD	5	
			---*---		
- 11	0713218-1		EMBLEM-INSTRUMENT PANEL	1	B
- 12	0713129-3	*	SWITCH, STARTER & LOCK KIT	1	J
	S-1255-3	*	SWITCH, STARTER, & LOCK KIT	1	K
- 13	S-1102-1		JACK-MICROPHONE CESSNA STANDARD	1	
- 14	0511035-4		TACHOMETER WHEN EXHAUSTED USE S-1305N3	1	
	S-1305N3		TACHOMETER	1	
			ATTACHING PARTS		
- 15	AN507B632R12		SCREW	4	
	MS20365B632C		NUT	4	
			---*---		
- 16	S-1363-3		SHAFT-TACHOMETER	1	
			ATTACHING PARTS		
	2981A-4-27		CLAMP TIN	1	
	S-1021Z-8-6		SCREW CESSNA STANDARD	1	
			---*---		
- 17	0311029-7		GAGE-MANIFOLD PRESSURE WHEN EXHAUSTED USE S-1301N1	1	
	S-1301N1		GAGE-MANIFOLD PRESSURE	1	
			ATTACHING PARTS		
	AN507B632R12		SCREW	4	
	MS20365B632C		NUT	4	
			---*---		
- 18	AN816-2D		NIPPLE	1	
- 19	0500106-273		LINE ASSEMBLY-MANIFOLD PRESSURE	1	
- 20	0511068-6		GAGE-CYLINDER HEAD TEMP. WHEN EXHAUSTED USE S-1307N2	1	
	S-1307N2		GAGE-CYLINDER HEAD TEMP.	1	
			ATTACHING PARTS		
	AN507B632R12		SCREW	4	
	MS20365B632C		NUT	4	
			---*---		
	0311018-10		LEAD-CYLINDER HEAD TEMPERATURE GAGE	1	
- 21	0513144-11		PANEL ASSEMBLY	1	F
	0513144-16		PANEL ASSEMBLY	1	G
			ATTACHING PARTS		
	AN507B632R12		SCREW	2	
	MS20365B632C		NUT	2	
			---*---		
- 22	0513144-2		GAGE-OIL TEMPERATURE	1	
- 23	0513144-10		GAGE-OIL PRESSURE	1	
- 24	0713062-6		GAGE-FUEL	2	F
	0513144-14		GAGE-FUEL	1	G
	0716128-30		GAGE-AUXILIARY FUEL	1	
- 25	0311020-8		GAGE-CARBURETOR AIR TEMPERATURE	1	
			ATTACHING PARTS		
	AN507B632R12		SCREW	4	
	AN340-B6		NUT	4	
	AN936A-6B		WASHER	2	
			---*---		
	0713209-1		PLACARD-CARBURETOR AIR TEMPERATURE GAGE	1	
- 26	0311057-1		GAGE-SUCTION WHEN EXHAUSTED USE S-1300N1	1	
	S-1300N1		GAGE-SUCTION	1	
			ATTACHING PARTS		
	AN507B632R12		SCREW	4	
	MS20365B632C		NUT	4	
- 27	0713302-5		CONTROL-CARBURETOR HEAT REF 0713302-3	1	
- 28	0311538-10		PRIMER ASSEMBLY-ENGINE	1	
	S-1240-5		KNOB	1	
- 29			CONTROL SYSTEM INSTALLATION-COWL FLAPS SEE FIGURE 91A	NP	
			S-PART NOS APPEARING ON THIS PAGE ARE CESSNA STANDARD		
			CONTINUED ON PAGES 170B, 170C, 170D, 171		

180 SERIAL 18050912 & ON
182 SERIAL 18253008 & ON

Instruments (Cont)

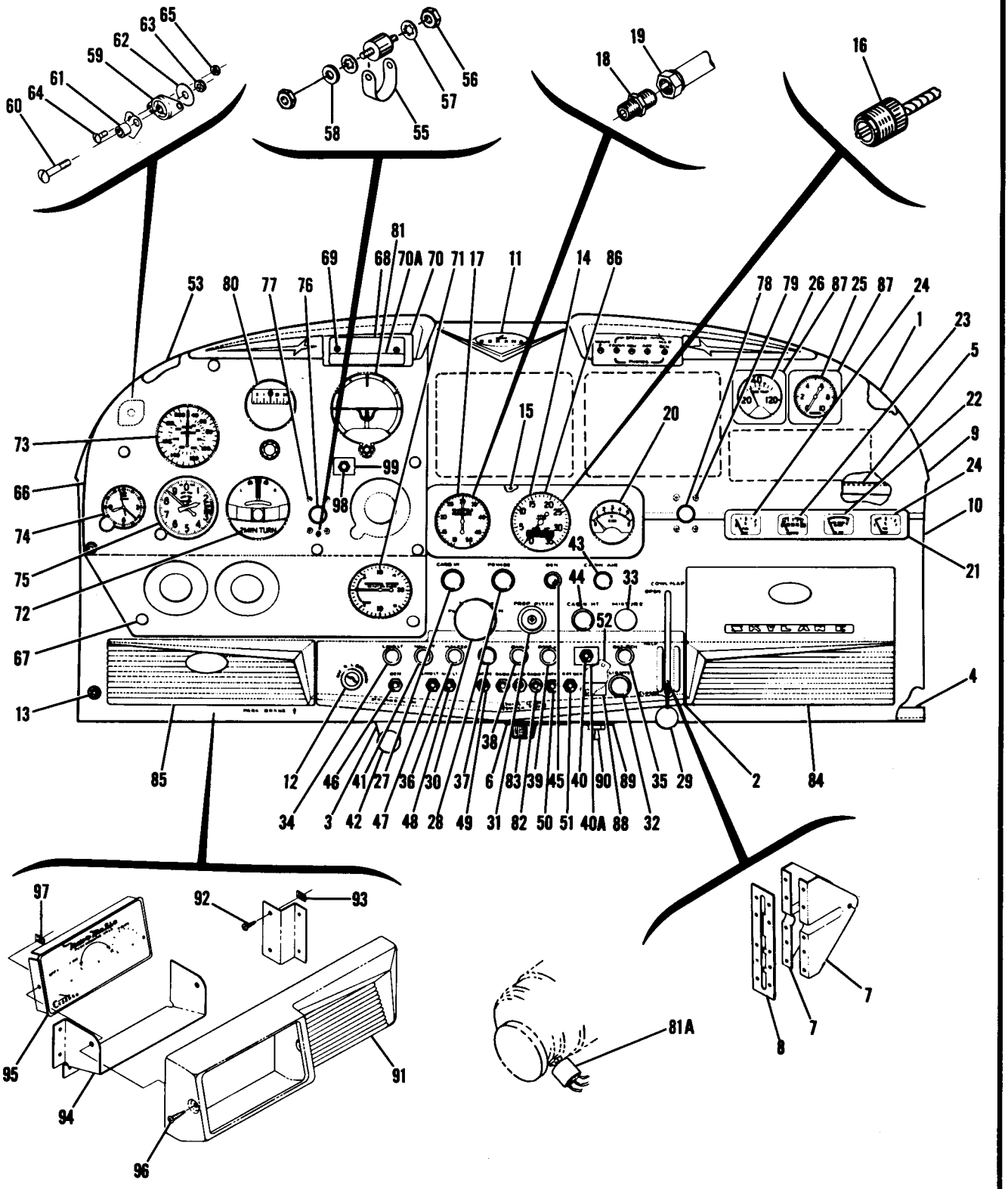

Figure 63A. Instrument Panel Equipment Installation and Assembly

FIGURE AND INDEX NO.	PART NUMBER		DESCRIPTION 1 2 3 4 5 6 7	UNITS PER ASSY	USABLE ON CODE
63A- 30	S-1222-1		CONTROL-THROTTLE-----CESSNA STANDARD	1	
- 31	0311031-5		CONTROL-PROPELLER PITCH	1	
- 32	0513039-7	**	LIGHTER-CIGAR CUNO	1	
	32	**	SOCKET ASSEMBLY CUNO	1	
	34	**	TRIM CUP CUNO	1	
	33	**	HEATING ELEMENT CUNO	1	
	S-1240-6		KNOB-CIGAR LIGHTER CESSNA STANDARD	1	
- 33	0713141-4		CONTROL-MIXTURE REF 0713141-1	1	
- 34	0713035		SWITCH-LANDING LIGHT	1	
	0713303-2		KNOB-LANDING LIGHT SWITCH	1	
- 35	0713026-9		SWITCH-ROTATING BEACON	1	
	0713303-2		KNOB-ROTATING BEACON SWITCH	1	
- 36	0713026-5		SWITCH-MASTER	1	
	0713303-2		KNOB-MASTER SWITCH	1	
- 37	0713026-7		SWITCH-MARKER BEACON	1	
	0411092-1		KNOB-MARKER BEACON SWITCH	1	
	0716128-28		SWITCH-AUXILIARY FUEL	1	
- 38	0713026-5		SWITCH-RADIO	1	
	0411092-1		KNOB-RADIO SWITCH	1	
- 39	0713026-4		SWITCH-PITOT HEAT	1	
	0713303-2		KNOB-PITOT HEAT SWITCH	1	
- 40	0511063		SWITCH-OIL DILUTION	1	
			ATTACHING PARTS		
			NUT	NP	
			---*---		
-40A	0713222-1		PLACARD-OIL DILUTION	1	
- 41	0713026-4		SWITCH-NAVIGATION LIGHTS SINGLE POLE	1	
	0713026-9		SWITCH-NAVIGATION LIGHTS DOUBLE POLE	1	
	0713171-1		SHIELD	1	
	0713303-2		KNOB-NAVIGATION LIGHT SWITCH	1	
- 42	S-1239-4		CONTROL-STRAINER DRAIN-REF 0713302-4 CESSNA STANDARD	1	
	S-1239-3		CONTROL-STRAINER DRAIN FLOATPLANE C.P.	1	
- 43	0713302-6		CONTROL-CABIN AIR REF 0713302-10	1	
- 44	0713141-4		CONTROL-CABIN HEAT REF 0713141-3	1	
- 45	0513051-8		LIGHT ASSEMBLY-CHARGE INDICATOR	1	
	1816		BULB-----GE	1	
	0713038		AMMETER WHEN EXHAUSTED USE S-1320-1	1	
	S-1320-1		AMMETER CESSNA STANDARD	1	
			ATTACHING PARTS		
	0700036-2		ADAPTER	1	
	AN515-6R6		SCREW	4	
	MS20365-632C		NUT	4	
			---*---		
- 46	PDM-50		CIRCUIT BREAKER SPT	1	
- 47	PSM15N		CIRCUIT BREAKER SPT	1	
- 48	PSM10N		CIRCUIT BREAKER SPT	1	
- 49	PSM10N		CIRCUIT BREAKER SPT	1	
- 50	PSM10N		CIRCUIT BREAKER SPT	1	
- 51	PSM10N		CIRCUIT BREAKER SPT	1	
- 52	CA-2		CIRCUIT BREAKER SPT	1	
	PA-2		CIRCUIT BREAKER SPT ALT	1	
			ATTACHING PARTS		
	AN507-832R12		SCREW	2	
	AN936A8		WASHER	2	
	AN340-8		NUT	2	
			---*---		
- 53	0713504-2		PANEL-SHOCK MOUNTED INSTRUMENT	1	
			ATTACHING PARTS		
- 54	0411059-1		MOUNT-SHOCK	3	
- 55	0413247		STRAP-GROUND	1	
- 56	AN340B8		NUT	6	
- 57	AN936A8		WASHER	6	
- 58	S-355		SPACER-----CESSNA STANDARD	3	
- 59	102PDLN-4		MOUNT-SHOCK-----LO	2	
- 60	AN515B8R20		SCREW	2	
- 61	NAS43DD-3-14		SPACER	2	
- 62	J2049-1D		WASHER-----LO	2	
- 63	MS20365B832C		NUT	2	
- 64	AN515B6R6		SCREW	4	
- 65	MS20365B632C		NUT	4	
			---*---		
- 66	0713519-2-279	◻	COVER-SHOCK PANEL	1	A
	0713519-1		COVER-SHOCK PANEL	1	B
			ATTACHING PARTS		
- 67	49265-K-2215		FASTENER UC	5	
			---*---		
- 68	0713028-8		CARD-CORRECTION	1	
	0713028-3		COVER-CORRECTION CARD	1	

CONTINUED ON PAGES 170D & 171

FIGURE AND INDEX NO.	PART NUMBER	DESCRIPTION 1 2 3 4 5 6 7	UNITS PER ASSY	USABLE ON CODE
63A-				
		RETAINER ASSEMBLY-CORRECTION CARD		
		ATTACHING PARTS	NP	
- 69	S-1022Z-4-12B	SCREW CESSNA STANDARD		
	NAS43DD-18	SPACER	2	
		---*---	2	
- 70	0813569-2	RETAINER-CORRECTION CARD		
-70A		PLATE-REGISTRATION NUMBER	1	
- 71	0411069-1	INDICATOR-VERTICAL SPEED WHEN EXHAUSTED USE S-1304N2	NP	
	S-1304N2	INDICATOR-VERTICAL SPEED	1	
	S-1392N1	INDICATOR-VERTICAL SPEED ALT	1	
	0411069-3	INDICATOR-VERTICAL SPEED ALT WHEN EXHAUSTED USE S-1304N1	1	
	S-1304N1	INDICATOR-VERTICAL SPEED	1	
		ATTACHING PARTS		
	AN515B6R12	SCREW	4	
	AN340B6	NUT	4	
	AN936B6B	WASHER	4	
		---*---		
	AN825-4D	TEE	1	
- 72	0411009-6	INDICATOR-TURN & BANK WHEN EXHAUSTED USE S-1302N1	1	
	S-1302N1	INDICATOR-TURN & BANK	1	
		ATTACHING PARTS		
	AN515B6R12	SCREW	4	
	AN340B6	NUT	4	
	AN936B6B	WASHER	4	
		---*---		
- 73	0411086-16	INDICATOR-AIRSPEED WHEN EXHAUSTED USE S-1324N3	1	
	0411086-21	INDICATOR-AIRSPEED ALT WHEN EXHAUSTED USE S-1324N3	1	
	S-1324N3	INDICATOR-AIRSPEED	1	
	0411086-14	INDICATOR-AIRSPEED-AMPHIBIAN WHEN EXHAUSTED USE S-1324N2	1	C
	0411086-23	INDICATOR-AIRSPEED-AMPHIBIAN ALT WHEN EXHAUSTED USE S-1324N2	1	C
	S-1324N2	INDICATOR-AIRSPEED	1	C
		ATTACHING PARTS		
	AN515B6R	SCREW	4	
	MS20365B632C	NUT	4	
		---*---		
- 74	0411010-1	CLOCK 8 DAY	1	
	0713131-1	CLOCK ELECTRIC WHEN EXHAUSTED USE S-1317N1	1	
	S-1317N1	CLOCK ELECTRIC	1	
		ATTACHING PARTS		
	AN515B6R	SCREW	4	
	MS20365B632C	NUT	4	
		---*---		
- 75	0411007-7	ALTIMETER WHEN EXHAUSTED USE S-1314N1	1	
	S-1314N1	ALTIMETER	1	
	0411007-8	ALTIMETER-SENSITIVE WHEN EXHAUSTED USE S-1313N1	1	
	0411007-10	ALTIMETER-SENSITIVE ALT WHEN EXHAUSTED USE S-1313N1	1	
	S-1313N1	ALTIMETER	1	
		ATTACHING PARTS		
	AN515B6R	SCREW	4	
	MS20365B632C	NUT	4	
		---*---		
- 76	0513146-11	COLLAR-CONTROL TUBE LH	1	
	0411224	BALL-CONTROL TUBE LH	1	
	0713099-1	SOCKET-CONTROL TUBE LH	1	
		ATTACHING PARTS		
- 77	AN5156R8	SCREW	4	
	MS20365-632C	NUT	4	
	AN960-6L	WASHER	AR	
		---*---		
- 78	0713099-1	SOCKET-CONTROL TUBE RH	2	
	0411224	BALL-CONTROL TUBE RH	1	
		ATTACHING PARTS		
- 79	AN5156R8	SCREW	4	
	MS20365-632C	NUT	4	
	AN960-6L	WASHER	AR	
		---*---		
- 80	0311056-4	GYRO-DIRECTIONAL-REBUILT WHEN EXHAUSTED USE S-1316N1	1	
	S-1316N1	GYRO-DIRECTIONAL-REBUILT	1	
	0311056-5	GYRO-DIRECTIONAL----NEW	1	
	S-1327N1	INDICATOR-DIRECTIONAL GYRO-AZIMUTH-TYPE 34B USED WITH VACUUM WARNING LIGHT INSTL.	1	K
		ATTACHING PARTS		
	AN515B-10R14	SCREW	4	
	MS20365B632C	NUT	4	
		---*---		

S-PART NOS APPEARING ON THIS PAGE ARE CESSNA STANDARD

CONTINUED ON PAGE 171

FIGURE AND INDEX NO.	PART NUMBER		DESCRIPTION 1 2 3 4 5 6 7	UNITS PER ASSY	USABLE ON CODE
63A- 81	0311058-5		GYRO-HORIZONTAL-REBUILT WHEN EXHAUSTED USE S-1309N1----	1	
	S-1309N1		GYRO-HORIZONTAL-REBUILT ----------	1	
	0311058-4		GYRO-HORIZONTAL NEW ----------	1	K
	S-1326N1		INDICATOR-GYRO HORIZON-TYPE 34B-USED WITH ---------- VACUUM WARNING LIGHTS		
			ATTACHING PARTS		
	AN515B-10R16		SCREW ----------	4	
	AN520B10R14		SCREW ----------	4	K
	MS20365B632C		NUT ----------	4	
			---*---		
	330R		BULB----------	2	K
-81A	S-1365-1		SWITCH----------	1	K
- 82	49265		STUD-TRIMOUNT UC ----------	AR	
	S-290D832		WASHER-----CESSNA STANDARD----------	AR	
- 83	0413126-7		RHEOSTAT ASSEMBLY ----------	1	
- 84			GLOVE BOX INSTALLATION SEE FIGURE 64----------	1	
- 85			MAP CASE INSTALLATION-----SEE FIGURE 64 ----------	1	J
- 86	0713208-2		ESCUTCHEON ----------	1	
- 87	0713208-1		ESCUTCHEON ----------	2	
- 88	0713160-1		PLACARD-STARTER CIRCUIT OFF-ON----------	1	H
- 89	0713159-1		BRACKET-STARTER CUTOUT SWITCH ----------	1	H
- 90	S-382-2		SWITCH-STARTER CUTOUT----------	1	H
- 91	0770056-1		COVER ASSEMBLY ----------	1	K
			ATTACHING PARTS		
- 92	S-1021Z-6-6		SCREW ----------	2	
- 93	NAS446-2-3		NUT ----------	2	
			---*---		
- 94	0770057-1		BRACKET ----------	1	K
- 95	0713721-1		FACEPLATE & BRACKET ASSEMBLY ----------	1	K
			ATTACHING PARTS		
- 96	S-1021Z-4-6		SCREW ----------	2	
- 97	NAS446-1-3		NUT ----------	2	
			---*---		
- 98	S-1284-1		SWITCH-PUSH BUTTON-VACUUM PRESS TO TEST ----------	1	K
- 99	0713705-4	□□	PLACARD-VACUUM LIGHTS-----PRESS TO TEST ----------	1	K

A---180 SERIAL 18050912 & ON
182 SERIAL 18253008 & ON
B---182 SKYLANE SERIAL 18253008 & ON
C---180 SERIAL 18050912 & ON
D---180 SERIAL 18050912 THRU 18050934
182 SERIAL 18253008 THRU 18253066
E---180 SERIAL 18050935 & ON
182 SERIAL 18253067 & ON
F---180 SERIAL 18050912 THRU 18050996
182 SERIAL 18253008 THRU 18253244
G---180 SERIAL 18050997 & ON
182 SERIAL 18253245 & ON
H---180 SERIAL 18050938 THRU 18051063
182 SERIAL 18253081 & ON
J---180 SERIAL 18050912 THRU 18051063
182 SERIAL 18253008 & ON
K---180 SERIAL 18051064 & ON

*NOTE. THIS KIT ALSO INCLUDES 2 DOOR LOCKS & KEYS

NOTE. FOR ACCESSORY KIT LISTINGS REFER TO PAGES 372 THRU 374B

NOTE**. CASCO PARTS ARE NO LONGER AVAILABLE. FOR REPLACEMENT ORDER COMPLETE CUNO ASSEMBLY, 0513039-7 & RESPECTIVE KNOB.

NOTE. □WHEN ORDERING COVER PANEL FOR AIRCRAFT EQUIPPED WITH VACUUM TEST SWITCH ALSO ORDER PART MARKED ■□.

S-PART NOS APPEARING ON THIS PAGE ARE CESSNA STANDARD

Instruments (Cont)

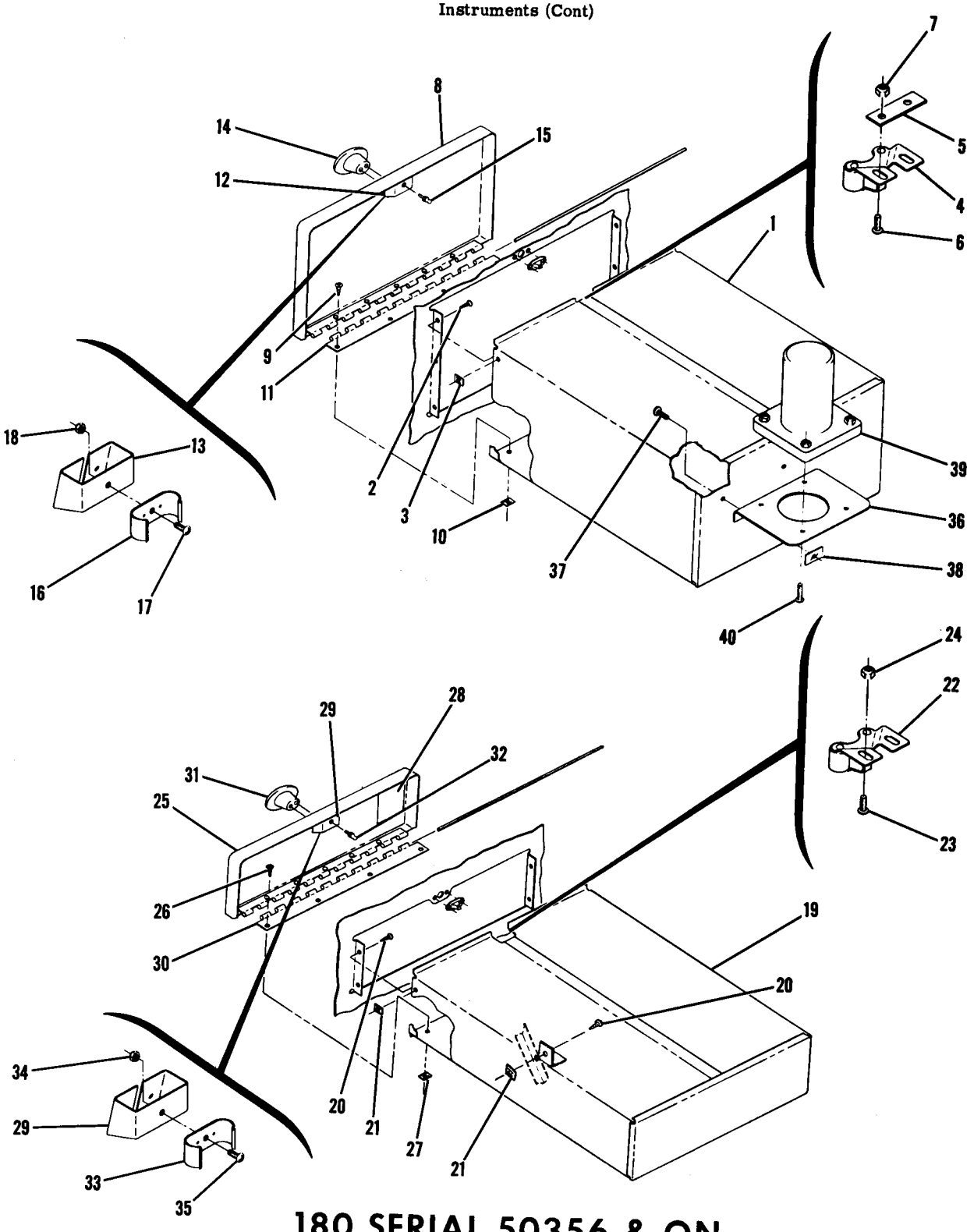

180 SERIAL 50356 & ON
182 SERIAL 51557 & ON

Figure 64. Glove Box and Map Case Assembly and Installation

FIGURE AND INDEX NO.	PART NUMBER	DESCRIPTION	UNITS PER ASSY	USABLE ON CODE
		1 2 3 4 5 6 7		
64-		GLOVE BOX & MAP CASE ASSEMBLIES & INSTALLATIONS	NP	A
- 1	0713503-11	BOX ASSEMBLY-GLOVE	1	D
	0713514-1	BOX ASSEMBLY-GLOVE	1	E
		ATTACHING PARTS		
- 2	S-1021Z-6-6	SCREW CESSNA STANDARD	4	
- 3	NAS446-3-3	NUT TIN A1777-6Z-3	4	
		---*---		
- 4	0713009-2	CATCH-DOOR	1	E
		ATTACHING PARTS		
- 5	0713517-1	SPACER	1	E
- 6	AN515-6R8	SCREW	2	E
- 7	MS20365-632C	NUT	2	E
		---*---		
- 8	0713503-8-279	DOOR ASSEMBLY-GLOVE BOX	1	D
	0713514-6-279	DOOR ASSEMBLY-GLOVE BOX	1	K
	0713514-10-279	DOOR ASSEMBLY-GLOVE BOX	1	F
	0713514-18-279	DOOR ASSEMBLY-GLOVE BOX	1	L
		ATTACHING PARTS		
- 9	S-1021Z-6-6	SCREW CESSNA STANDARD	5	
- 10	NAS446-3-3	NUT TIN A1777-6Z-3	5	
		---*---		
- 11	0713503-12	HINGE ASSEMBLY	1	D
	0713515-1	HINGE ASSEMBLY	1	E
- 12	0713503-7	BRACKET-DOOR CATCH	1	D
- 13	0713516-1	BRACKET-DOOR CATCH	1	E
- 14	0713303-7	KNOB	1	
		ATTACHING PARTS		
	AN515-6R6	SCREW	1	D
		---*---		
- 15	P116-499-10-24A	STUD-----TIN	1	E
- 16	0713009-1	CLIP-DOOR CATCH	1	D
		ATTACHING PARTS		
	MS20365-632C	NUT	AR	D
	AN960D6	WASHER	1	E
- 17	AN515-6R4	SCREW	1	E
- 18	MS20365-632C	NUT		
		---*---		
	0713724-1	MEDALLION-CESSNA ANNIVERSARY MODEL	1	L
- 19	0713503-6	CASE ASSEMBLY-MAP	1	D
	0713503-25	CASE ASSEMBLY-MAP	1	E
		ATTACHING PARTS		
- 20	S-1021Z-6-6	SCREW CESSNA STANDARD	5	
- 21	NAS446-3-3	NUT TIN A1777-6Z-3	5	
		---*---		
- 22	0713009-2	CATCH-DOOR	1	E
		ATTACHING PARTS		
- 23	AN515-6R4	SCREW	2	
- 24	MS20365-632C	NUT	2	
		---*---		
- 25	0713503-1	DOOR ASSEMBLY-MAP CASE	1	B
	0713503-17	DOOR ASSEMBLY-MAP CASE	1	C
	0713521-1	DOOR ASSEMBLY-MAP CASE	1	G
	0513521-7	DOOR ASSEMBLY-MAP CASE	1	L
	0713521-4	DOOR ASSEMBLY-MAP CASE	1	H
		ATTACHING PARTS		
- 26	S-1021Z-6-6	SCREW CESSNA STANDARD	5	
- 27	NAS446-3-3	NUT TIN A1777-6Z-3	5	
		---*---		
- 28	0713210-9	PLACARD-TIRE & OIL	1	C
	0713210-11	PLACARD-TIRE & OIL	1	J
	0713210-15	PLACARD-TIRE & OIL	1	H
- 29	0713503-7	BRACKET-DOOR CATCH	1	
- 30	0713503-16	HINGE ASSEMBLY	1	
- 31	0713303-7	KNOB	1	
		ATTACHING PARTS		
	AN515-6R6	SCREW	2	
		---*---		
- 32	P116-499-10-24A	STUD-----TIN	1	D
- 33	0713009-1	CLIP-DOOR CATCH	1	E
		ATTACHING PARTS		
- 34	MS20365-632C	NUT	1	E
- 35	AN515-6R4	SCREW	1	
		---*---		
	0700104-24	RUG-GLOVE BOX SOUNDPROOFING	1	
	0700104-25	RUG-MAP CASE SOUNDPROOFING	1	

180 SERIAL 50356 & ON
182 SERIAL 51557 & ON

CONTINUED ON PAGE 173A

FIGURE AND INDEX NO.	PART NUMBER	DESCRIPTION 1 2 3 4 5 6 7	UNITS PER ASSY	USABLE ON CODE
64- 36	0313313-3	BRACKET-STALL WARNING HORN	1	
		ATTACHING PARTS		
- 37	S-1021Z-8-6	SCREW CESSNA STANDARD	2	
- 38	NAS446-4-3	NUT	2	
		---*---		
- 39	0511062-10	HORN ASSEMBLY-STALL WARNING	1	
		ATTACHING PARTS		
- 40	AN515B6R12	SCREW	4	
		---*---		
		A---180 SERIAL 50356 & ON 182 SERIAL 51557 & ON B---180 SERIAL 50356 THRU 50911 C---182 SERIAL 51557 THRU 53007 D---180 SERIAL 50356 THRU 50911 182 SERIAL 51557 THRU 53007 E---180 SERIAL 18050912 & ON 182 SERIAL 18253008 & ON F---182 SKYLANE SERIAL 18253008 & ON G---180 SERIAL 18050912 THRU 18051063 H---182 SERIAL 18253008 & ON J---180 SERIAL 50356 & ON K---180 SERIAL 18050912 THRU 18051063 182 SERIAL 18253008 & ON L---180 SERIAL 18051064 & ON NOTE. FOR ACCESSORY KIT LISTINGS REFER TO PAGES 372 THRU 374B		

This page intentionally left blank.

Fuselage Equipment

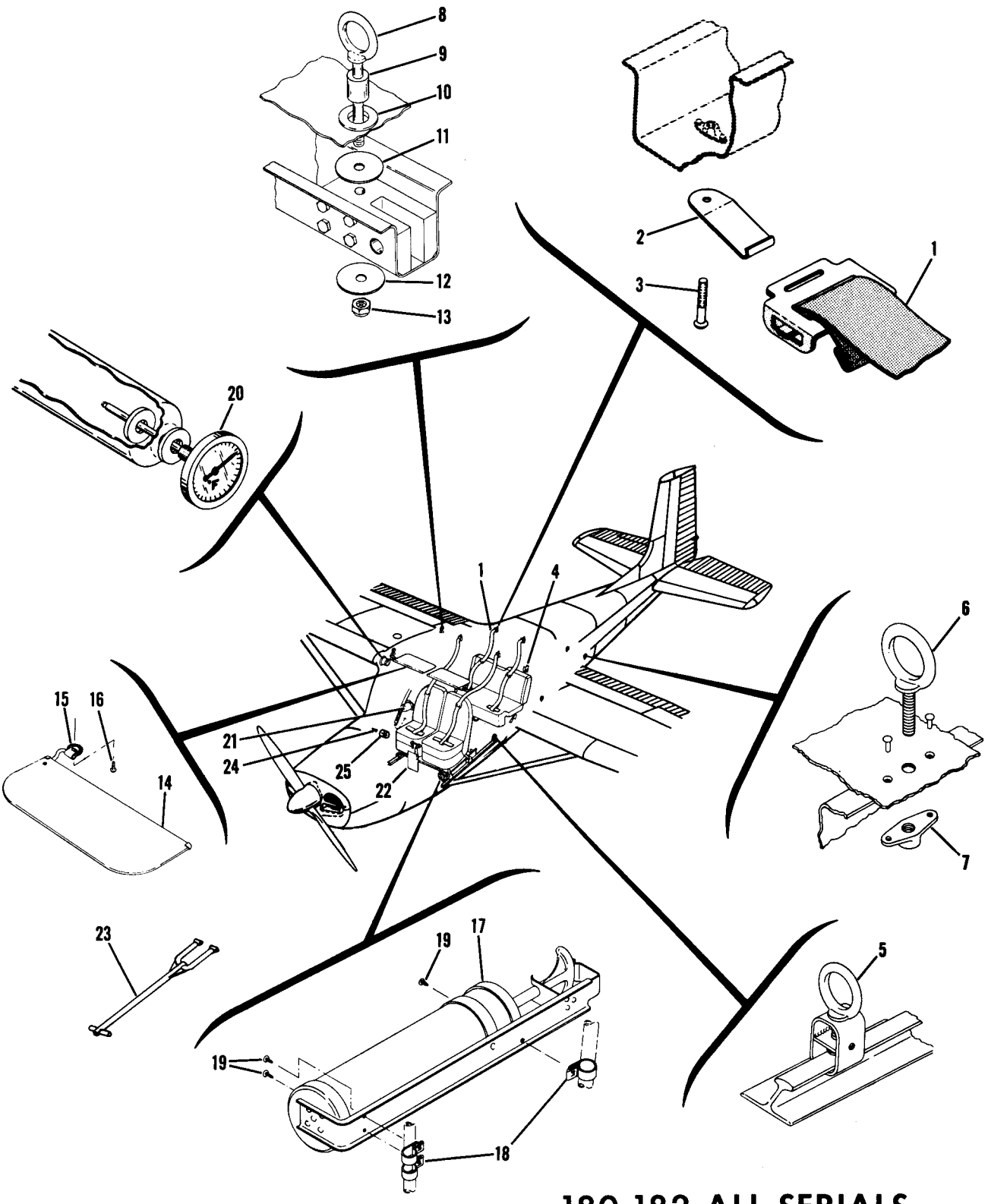

180-182 ALL SERIALS

Figure 65. Fuselage Equipment Installation

FIGURE AND INDEX NO.	PART NUMBER	DESCRIPTION 1 2 3 4 5 6 7	UNITS PER ASSY	USABLE ON CODE
65-		FUSELAGE EQUIPMENT INSTALLATION	NP	
- 1	0511233	HARNESS-SHOULDER	4	A
	0511233-7	HARNESS-SHOULDER	4	B
- 2	0511232-3	HOOK-SHOULDER HARNESS	4	
		ATTACHING PARTS		
- 3	NAS221-10	SCREW	1	
		---*---		
- 4	10004-98	JACK POINT-UNIVERSAL	1	M
	10182-006	JACK POINT-UNIVERSAL	1	N
- 5	0511166	SLIDE ASSEMBLY-TIE DOWN	2	
- 6	0511165	RING-TIE DOWN	6	
		ATTACHING PARTS		
- 7	NAS680A4	NUTPLATE	6	
		---*---		
- 8	0541115-3	EYEBOLT-HOISTING	4	
- 9	0541115-2	SPACER	4	
- 10	MS35489-17	GROMMET	4	
- 11	0541115-4	PLATE	4	
- 12	AN970-5	WASHER	4	
- 13	MS20365-524C	NUT	4	
- 14	0713011-13	VISOR-SUN	1	C
	0713104-1	VISOR-SUN	1	D
	1200116-1	VISOR-SUN LH	1	O
	1200116-2	VISOR-SUN RH	1	O
		ATTACHING PARTS		
- 15	0713011-12	BRACKET	1	
- 16	S-1021Z-10-10	SCREW CESSNA STANDARD	2	E
	AN507-1032R14	SCREW	2	F
		---*---		
- 17	0800111-2	FIRE EXTINGUISHER	1	
	CPS-2 1/2	FIRE EXTINGUISHER	1	
- 18	NAS434D8	CLAMP TIN A2981A-8	2	A
	A2981A-4-27	CLAMP TIN USED WITH STANDARD SEAT	2	B
	A2981A-4-27	CLAMP TIN USED WITH TILTING SEAT	1	B
	NAS434D10	CLAMP TIN 2981A-10	1	A
	A2981A-8-27	CLAMP TIN USED WITH STANDARD SEAT	2	B
	A2981A-8-27	CLAMP TIN USED WITH TILTING SEAT	1	B
		ATTACHING PARTS		
- 19	S-1021Z-8-8	SCREW CESSNA STANDARD	1	
		---*---		
		INSTALLATION-PORTABLE STRETCHER SEE FIGURE 66	1	G
		INSTALLATION-PORTABLE STRETCHER SEE FIGURE 66	1	H
- 20	S-1322-1	GAGE-OUTSIDE AIR TEMP-----CESSNA STANDARD	1	
- 21	0713068-1	COMPASS ASSEMBLY	1	
		ATTACHING PARTS		
	0713065	BRACKET	1	
	AN520PB10R12	SCREW	4	
		---*---		

180-182 ALL SERIALS

CONTINUED ON PAGE 176

FIGURE AND INDEX NO.	PART NUMBER	DESCRIPTION 1 2 3 4 5 6 7	UNITS PER ASSY	USABLE ON CODE
65- 22	0511142-5	LOCK-CONTROL	1	J
	0513145-1	LOCK-CONTROL	1	K
	0713108-2	LOCK-CONTROL	1	P
	0713108-4	LOCK-CONTROL	1	Q
- 23	0700315-2	TOW BAR	1	
- 24	0541162-1	VALVE-TUBELESS TIRE INFLATION	1	L
	10004-101	EXPANDER ASSEMBLY-TIRE	1	L
- 25	0526001-1	CUP-FUEL SAMPLER	1	
		A---180 SERIAL 30000 THRU 32661 182 SERIAL 33000 THRU 33842 B---180 SERIAL 32662 & ON 182 SERIAL 33843 & ON C---180 SERIAL 30000 THRU 50355 182 SERIAL 33000 THRU 51556 D---180 SERIAL 50356 THRU 50661 182 SERIAL 51557 THRU 52358 E---180 SERIAL 30000 THRU 31532 F---180 SERIAL 51533 & ON 182 SERIAL 33000 & ON G---180 SERIAL 30000 THRU 30170 H---180 SERIAL 30171 & ON 182 SERIAL 33000 & ON J---180 SERIAL 30000 THRU 32661 K---180 SERIAL 50106 THRU 50355 182 SERIAL 34754 THRU 51556 L---180 SERIAL 50356 & ON 182 SERIAL 51557 & ON M---180 SERIAL 30000 & ON 182 SERIAL 33000 THRU 51556 N---182 SERIAL 51557 & ON O---180 SERIAL 50662 & ON 182 SERIAL 52359 & ON P---180 SERIAL 50356 THRU 50911 182 SERIAL 51557 THRU 53007 Q---180 SERIAL 18050912 & ON 182 SERIAL 18253008 & ON NOTE. FOR ACCESSORY KIT LISTINGS REFER TO PAGES 372 THRU 374B		

FIGURE AND INDEX NO.	PART NUMBER	DESCRIPTION 1 2 3 4 5 6 7	UNITS PER ASSY	USABLE ON CODE
66-		PORTABLE STRETCHER INSTALLATION	NP	
- 1	100FP	STRETCHER GRANPORTABLE	1	
- 2	0511131	BACK ASSEMBLY-REAR SEAT	1	A
	0511131-15	BACK ASSEMBLY-REAR SEAT	1	E
- 3	0511003-23	BRACKET ASSEMBLY-SUPPORT	2	B
- 4	0511170	SUPPORT ASSEMBLY-TUBE	1	
		ATTACHING PARTS		
- 5	AN415A	PIN	2	
		---*---		
- 6	0511003-17	BAG ASSEMBLY-STRETCHER WALL	1	
		ATTACHING PARTS		
- 7	S-1021Z-4-6	SCREW CESSNA STANDARD	29	
- 8	NAS446-1-3	NUT TIN A1776-4Z-3	29	
		---*---		
- 9	0511003-10	STRAP-TIEDOWN	1	
		ATTACHING PARTS		
- 10	S-1021Z-4-6	SCREW CESSNA STANDARD	1	
	NAS446-1-3	NUT TIN A1776-4Z-3	1	
		---*---		
- 11	0511131-10	CLIP-SEAT BACK	2	

180-182 ALL SERIALS

CONTINUED ON PAGE 177

Fuselage Equipment (Cont)

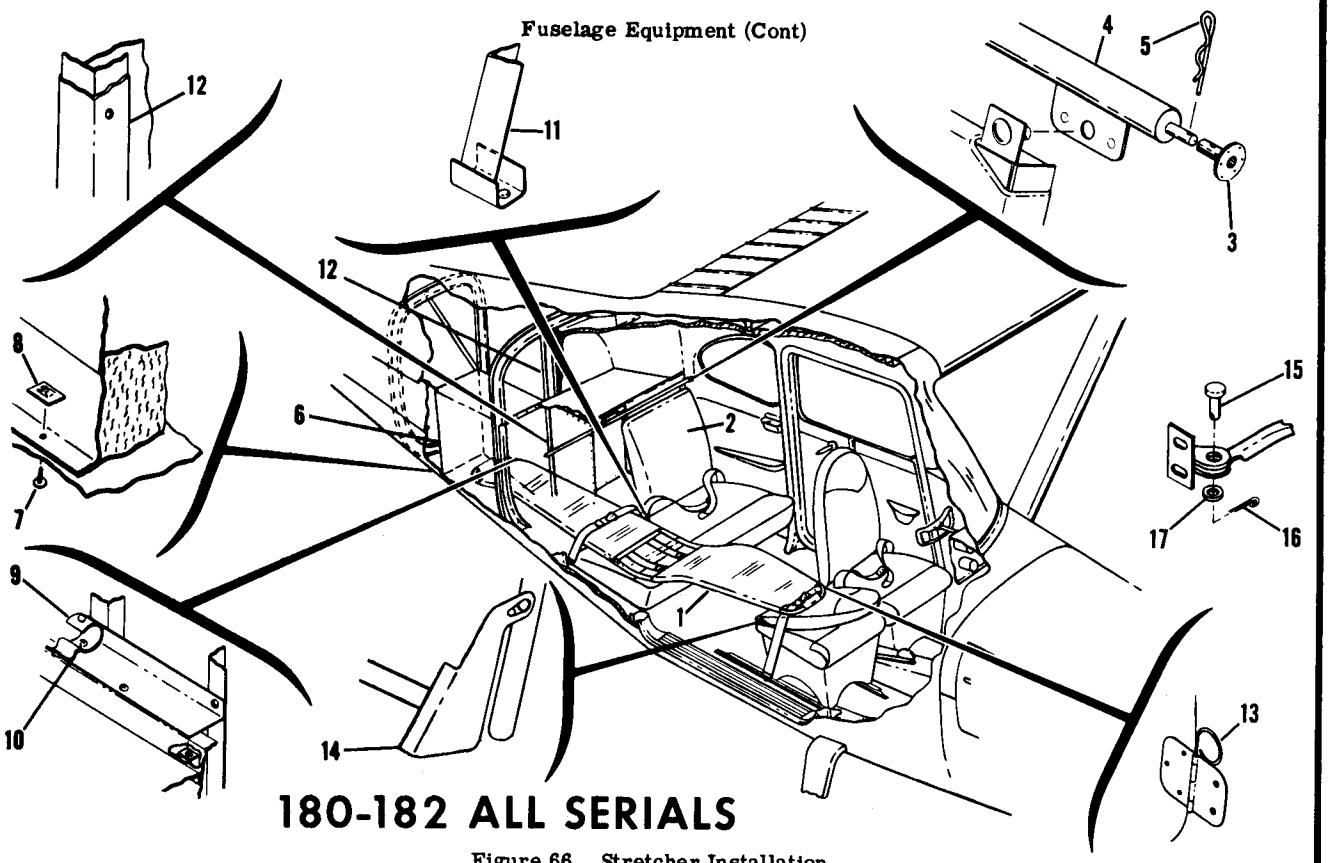

Figure 66. Stretcher Installation

FIGURE AND INDEX NO.	PART NUMBER	DESCRIPTION 1 2 3 4 5 6 7	UNITS PER ASSY	USABLE ON CODE
66- 12	0511003-16	ANGLE-BAG RETAINING	1	
- 13	0511003-12	PIN-DOOR HINGE	2	C
	0511003-31	PIN-DOOR HINGE	2	D
- 14	0511003-29	DOUBLER-SEAT REINFORCEMENT LH	1	B
	0511003-30	DOUBLER-SEAT REINFORCEMENT RH	1	B
- 15	MS20392-2-9	PIN-DOOR DISCONNECT	1	
		ATTACHING PARTS		
- 16	MS24665-148	PIN-COTTER	1	
- 17	AN960-10L	WASHER	1	
		---*---		
		A---180 SERIAL 30000 THRU 50661 182 SERIAL 33000 THRU 52358 B---180 SERIAL 32151 & ON 182 SERIAL 33000 & ON C---180 SERIAL 30000 THRU 50355 182 SERIAL 33000 THRU 51556 D---180 SERIAL 50356 & ON 182 SERIAL 51557 & ON E---180 SERIAL 50662 & ON 182 SERIAL 52359 & ON NOTE. FOR ACCESSORY KIT LISTINGS REFER TO PAGES 372 THRU 374B		

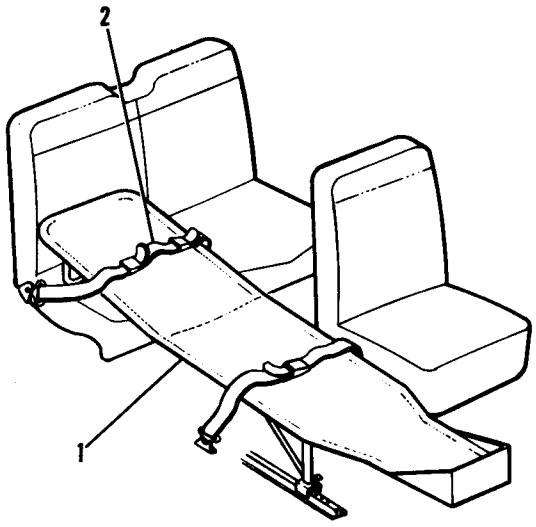

180-182 ALL SERIALS

Figure 66A. Stretcher Installation

FIGURE AND INDEX NO.	PART NUMBER	DESCRIPTION 1 2 3 4 5 6 7	UNITS PER ASSY	USABLE ON CODE
66A-		STRETCHER INSTALLATION ----------	NP	
- 1	0700073-2	STRETCHER ----------	1	
- 2	FCD-2475-50	BELT EXTENSION ----------	1	

This page intentionally left blank.

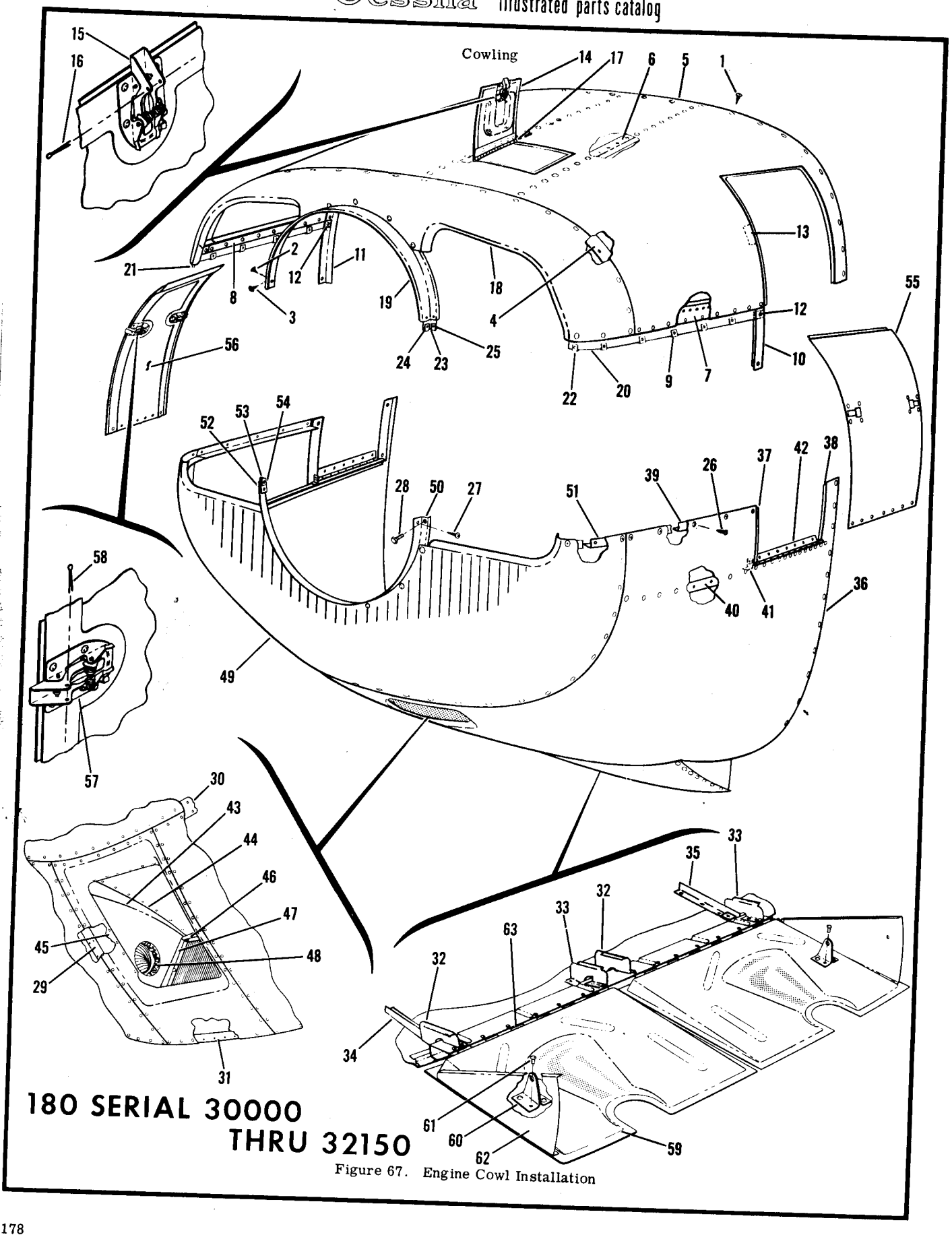

Figure 67. Engine Cowl Installation

FIGURE AND INDEX NO.	PART NUMBER	DESCRIPTION 1 2 3 4 5 6 7	UNITS PER ASSY	USABLE ON CODE
67-	0752000-134	COWL ASSEMBLY-ENGINE WHEN EXHAUSTED USE DETAIL PARTS ---- ATTACHING PARTS	1	A
- 1	S-1022Z-8-8	SCREW CESSNA STANDARD ------- 180 SERIAL ------	56	
		---*---		
	0752000-101	COWL ASSEMBLY-UPPER ---- 30000 THRU 32150	1	
		ATTACHING PARTS		
- 2	AN515-8R	SCREW ----------	1	
- 3	AN3-3A	BOLT ----------	1	
		---*---		
- 4	0752000-19	STRIP-SPLICE ----------	1	
	0752000-122	COWL ASSEMBLY-UPPER-----LESS NOSE CAP ----------	1	
- 5	0752000-55	SPOTWELD ASSEMBLY-UPPER COWL ----------	1	
- 6	0752000-63	ANGLE-STIFFENER ----------	2	
- 7	0752000-23	ANGLE-PARTING LH ----------	1	
- 8	0752000-24	ANGLE-PARTING RH ----------	1	
- 9	NAS395-14-3	NUT TIN A1294-8Z-3----------	6	
- 10	0752000-49	ANGLE-DOOR OPENING LH ----------	1	
- 11	0752000-48	ANGLE-DOOR OPENING RH ----------	1	
- 12	NAS395-13-3	NUT TIN A6077-8Z-3----------	4	
- 13	0752000-64	SPACER-LATCH----------	5	
- 14	0752000-56	DOOR ASSEMBLY-OIL FILTER ----------	1	
- 15	S-1188-1	LATCH-DOOR-----HWL ----------	1	
- 16	MS24665-134	PIN-COTTER----------	1	
- 17	0752000-117	HINGE ASSEMBLY-DOOR ----------	1	
- 18	0752000-125	NOSE CAP ASSEMBLY-UPPER COWL----------	1	
- 19	0752000-7	ADAPTER RING-NOSE CAP ----------	1	
- 20	0752000-17	STRIP-SPLICE LH ----------	1	
- 21	0752000-18	STRIP-SPLICE RH ----------	1	
- 22	NAS395-14-3	NUT TIN A1274-8Z-3----------	6	
- 23	0752000-111	CLIP ASSEMBLY-NOSE CAP UPPER ----------	1	
- 24	22A5-02	NUTPLATE EN----------	1	
- 25	22A5-82	NUTPLATE EN----------	1	
	0752000-102	COWL ASSEMBLY-LOWER ----------	1	
		ATTACHING PARTS		
- 26	S-1022Z-8-8	SCREW CESSNA STANDARD ----------	18	
- 27	AN515-8R	SCREW ----------	1	
- 28	AN3-3A	BOLT ----------	1	
		---*---		
	0752000-123	COWL ASSEMBLY-LOWER-----LESS NOSE CAP ----------	1	
- 29	0752000-36	STRIP-SPLICE----------	2	
- 30	0752000-15	STRIP-SPLICE----------	1	
- 31	0752000-35	SUPPORT-COWL FLAPS ----------	1	
- 32	0752000-135	STIFFENER-COWL FLAP ----------	2	
- 33	0752000-136	STIFFENER-COWL FLAP ----------	2	
- 34	0752000-137	ANGLE-STIFFENER ----------	1	
- 35	0752000-138	ANGLE-STIFFENER ----------	1	
- 36	0752000-126	COWL ASSEMBLY-LOWER LH----------	1	
	0752000-127	COWL ASSEMBLY-LOWER RH----------	1	
- 37	0752000-28	DOUBLER-DOOR OPENING FORWARD ----------	1	
- 38	0752000-29	DOUBLER-DOOR OPENING AFT----------	1	
- 39	0752000-61	DOUBLER-LH----------	1	
	0752000-22	DOUBLER-RH----------	1	
- 40	0752000-119	ANGLE-STIFFENER LH ----------	1	
	0752000-118	ANGLE-STIFFENER RH ----------	1	
- 41	0752000-113	ANGLE-REINFORCEMENT LH ----------	1	
	0752000-112	ANGLE-REINFORCEMENT RH ----------	1	
	NAS395-12-3	NUT TIN A1786-8Z-3 ----------	2	
- 42	0752000-116	HINGE ASSEMBLY-COWL DOOR----------	1	
	0752000-109	TUNNEL ASSEMBLY-AIR INTAKE----------	1	
- 43	0752000-52	SIDE-TUNNEL RH ----------	1	
	0752000-51	SIDE-TUNNEL LH ----------	1	
- 44	0752000-50	TOP-TUNNEL----------	1	
- 45	0752000-27	ADAPTER-TUNNEL ----------	1	
- 46	0752001-1	SEAL-TUNNEL UPPER ----------	1	
	0752000-38	ANCHOR STRIP-SEAL ----------	1	
- 47	0752001-2	SEAL-TUNNEL SIDE ----------	2	
	0752000-57	ANCHOR STRIP-SEAL ----------	2	
- 48	0450234-27	RUB STRIP ----------	2	

CONTINUED ON PAGE 180

FIGURE AND INDEX NO.	PART NUMBER	DESCRIPTION 1 2 3 4 5 6 7	UNITS PER ASSY	USABLE ON CODE
67- 49	0752000-124	NOSE CAP ASSEMBLY-LOWER COWL	1	
- 50	0752000-8	ADAPTER RING-NOSE CAP	1	
- 51	0752000-21	DOUBLER-LH	1	
	0752000-60	DOUBLER-RH	1	
- 52	0752000-111	CLIP ASSEMBLY-NOSE CAP LOWER	1	
- 53	22A5-02	NUTPLATE EN	1	
- 54	22A5-82	NUTPLATE EN	1	
- 55	0752000-103	DOOR ASSEMBLY-COWL LH	1	
- 56	0752000-104	DOOR ASSEMBLY-COWL RH	1	
- 57	S-1188-1	LATCH-DOOR HWL	2	
- 58	MS24665-134	PIN-COTTER	2	
- 59	0752000-133	FLAP ASSEMBLY-COWL LH	1	
	0752000-132	FLAP ASSEMBLY-COWL RH	1	
- 60	0752000-34	BRACKET-CONTROL	1	
- 61	CR163-4-2	RIVET CY	4	
- 62	0752000-43	BAFFLE-COWL FLAP LH	1	
	0752000-44	BAFFLE-COWL FLAP RH	1	
- 63	0752000-116	HINGE ASSEMBLY-COWL FLAP	1	
		A---180 SERIAL 30000 THRU 32150		

FIGURE AND INDEX NO.	PART NUMBER	DESCRIPTION 1 2 3 4 5 6 7	UNITS PER ASSY	USABLE ON CODE
68-	0752000-150	COWL ASSEMBLY-ENGINE ATTACHING PARTS WHEN EXHAUSTED USE DETAIL PARTS	1	A
- 1	S-1022Z-8-8	SCREW CESSNA STANDARDS	56	
		---*--- **180 SERIAL**		
	0752000-101	COWL ASSEMBLY-UPPER **32151 THRU 32661**	1	
		ATTACHING PARTS		
- 2	AN515-8R	SCREW	1	
- 3	AN3-3A	BOLT	1	
		---*---		
- 4	0752000-19	STRIP-SPLICE	1	
	0752000-122	COWL ASSEMBLY-UPPER-----LESS NOSE CAP	1	
- 5	0752000-55	SPOTWELD ASSEMBLY-UPPER COWL	1	
- 6	0752000-63	ANGLE-STIFFENER	2	
- 7	0752000-23	ANGLE-PARTING LH	1	
	0752000-24	ANGLE-PARTING RH	1	
- 8	NAS395-14-3	NUT TIN A1274-8Z-3	6	
- 9	0752000-49	ANGLE-DOOR OPENING LH	1	
	0752000-48	ANGLE-DOOR OPENING RH	1	
- 10	NAS395-13-3	NUT TIN A6077-8Z-3	4	
- 11	0752000-64	SPACER-LATCH	5	
- 12	0752000-56	DOOR ASSEMBLY-OIL FILTER	1	
- 13	S-1188-1	LATCH-DOOR-----HWL	1	
- 14	MS24665-134	PIN-COTTER	1	
- 15	0752000-117	HINGE ASSEMBLY-DOOR	1	
- 16	0752000-125	NOSE CAP ASSEMBLY-UPPER COWL	1	
- 17	0752000-7	ADAPTER RING-NOSE CAP	1	
- 18	0752000-17	STRIP-SPLICE LH	1	
	0752000-18	STRIP-SPLICE RH	1	
- 19	NAS395-14-3	NUT TIN A1274-8Z-3	6	
- 20	0752000-111	CLIP ASSEMBLY-NOSE CAP UPPER	1	
- 21	NAS684A3	NUTPLATE EN	1	
- 22	NAS684A08	NUTPLATE EN	1	
	0752000-149	COWL ASSEMBLY-LOWER	1	
		ATTACHING PARTS		
- 23	S-1022Z-8-8	SCREW CESSNA STANDARD	18	
- 24	AN515-8R	SCREW	1	
- 25	AN3-3A	BOLT	1	
		---*---		
		COWL ASSEMBLY-LOWER-----LESS NOSE CAP	1	
- 26	0752000-139	DOUBLER-EXHAUST OPENING	1	
- 27	0752000-144	DOUBLER-AIR INLET OPENING	1	
- 28	0752000-36	STRIP-SPLICE	2	
- 29	0752000-15	STRIP-SPLICE	1	
- 30	0752000-35	SUPPORT-COWL FLAPS	1	
- 31	0752000-135	STIFFENER-COWL FLAP	2	
		CONTINUED ON PAGE 182		

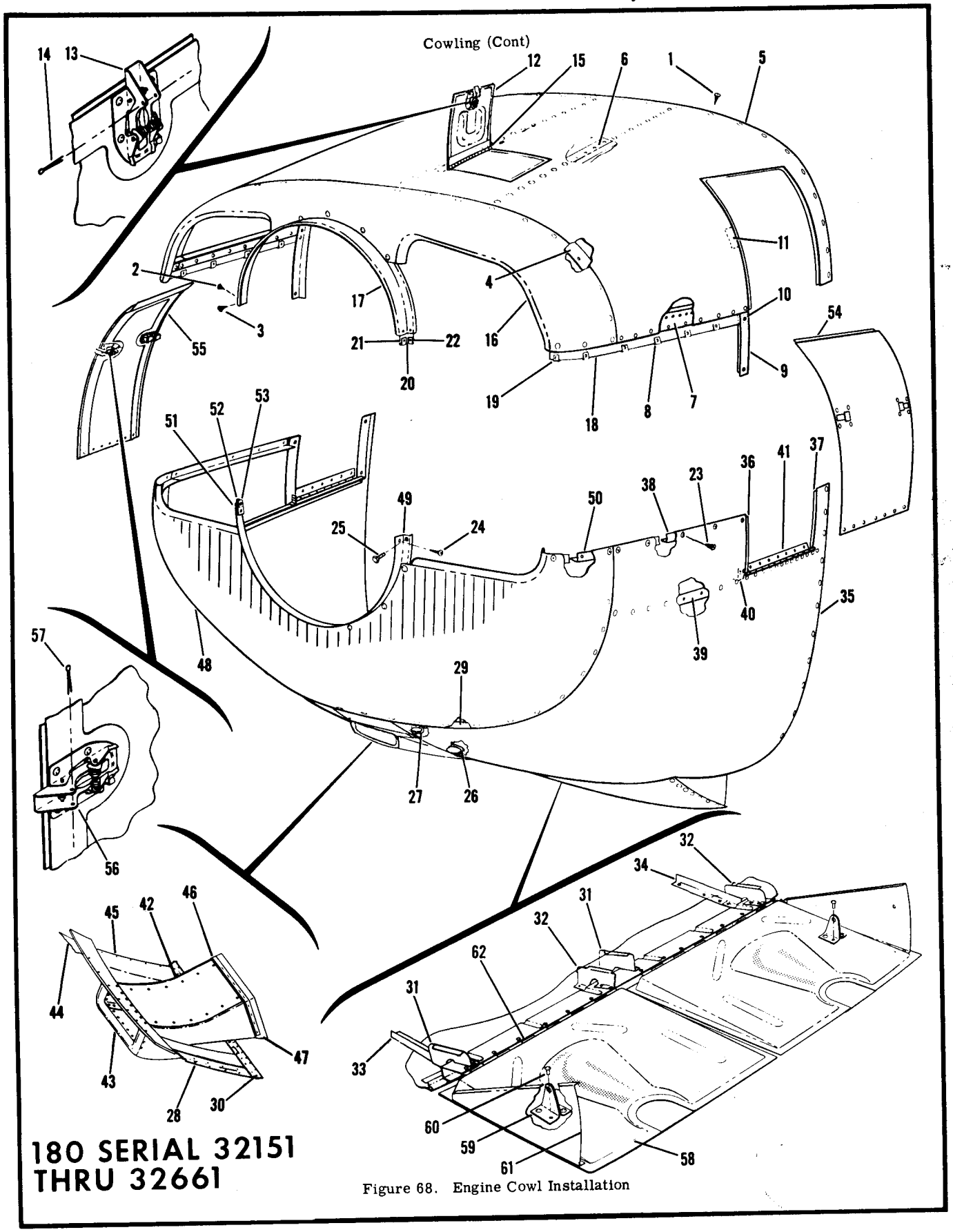

Figure 68. Engine Cowl Installation

FIGURE AND INDEX NO.	PART NUMBER	DESCRIPTION 1 2 3 4 5 6 7	UNITS PER ASSY	USABLE ON CODE
68- 32	0752000-136	STIFFENER-COWL FLAP	2	
- 33	0752000-137	ANGLE-STIFFENER	1	
- 34	0752000-138	ANGLE-STIFFENER	1	
- 35	0752000-126	COWL ASSEMBLY-LOWER LH	1	
	0752000-127	COWL ASSEMBLY-LOWER RH	1	
- 36	0752000-28	DOUBLER-DOOR OPENING FORWARD	1	
- 37	0752000-29	DOUBLER-DOOR OPENING AFT	1	
- 38	0752000-61	DOUBLER-LH	1	
	0752000-22	DOUBLER-RH	1	
- 39	0752000-119	ANGLE-STIFFENER LH	1	
	0752000-118	ANGLE-STIFFENER RH	1	
- 40	0752000-113	ANGLE-REINFORCEMENT LH	1	
	0752000-112	ANGLE-REINFORCEMENT RH	1	
	NAS395-12-3	NUT TIN A1786-8Z-3	1	
- 41	0752000-116	HINGE ASSEMBLY-COWL DOOR	2	
	0752007-1	SCOOP ASSEMBLY-AIR INTAKE	1	
- 42	0752007-13	BOX ASSEMBLY	1	
- 43	0752008-495	CASTING-NOSE	1	
- 44	0752007-3	SKIN-SCOOP	1	
- 45	0752007-4	SKIN-SCOOP	1	
- 46	0752007-9	RETAINER-SCOOP	1	
- 47	0752007-11	SEAL-SCOOP	1	
	0752007-10	RETAINER-SCOOP	1	
	0752007-12	SEAL-SCOOP	1	
- 48	0752000-124	NOSE CAP ASSEMBLY-LOWER COWL	1	
- 49	0752000-8	ADAPTER RING-NOSE CAP	1	
- 50	0752000-21	DOUBLER-LH	1	
	0752000-60	DOUBLER-RH	1	
- 51	0752000-111	CLIP ASSEMBLY-NOSE CAP LOWER	1	
- 52	NAS684A3	NUTPLATE EN	1	
- 53	NAS684A08	NUTPLATE EN	1	
- 54	0752000-103	DOOR ASSEMBLY-COWL LH	1	
- 55	0752000-104	DOOR ASSEMBLY-COWL RH	1	
- 56	S-1188-1	LATCH-DOOR HWL	1	
- 57	MS24665-134	PIN-COTTER	2	
- 58	0752000-143	FLAP ASSEMBLY-COWL LH	2	
	0752000-142	FLAP ASSEMBLY-COWL RH	1	
- 59	0752000-34	BRACKET-CONTROL	1	
- 60	CR163-4-2	RIVET CY	1	
- 61	0752000-43	BAFFLE-COWL FLAP LH	4	
	0752000-44	BAFFLE-COWL FLAP RH	1	
- 62	0752000-116	HINGE ASSEMBLY-COWL FLAP	1	
		A---180 SERIAL 32151 THRU 32661		

FIGURE AND INDEX NO.	PART NUMBER	DESCRIPTION	UNITS PER ASSY	USABLE ON CODE
		1 2 3 4 5 6 7		
69-	0752012-1	COWL ASSEMBLY-ENGINE WHEN EXHAUSTED USE DETAIL PARTS ----	1	A
	0752012-4	COWL ASSEMBLY-ENGINE WHEN EXHAUSTED USE DETAIL PARTS ----	1	B
	0752012-6	COWL ASSEMBLY-ENGINE WHEN EXHAUSTED USE DETAIL PARTS ----	1	C
		ATTACHING PARTS		
- 1	S-1022Z-8-8	SCREW CESSNA STANDARD ---------- ----	56	
		---*---		
- 2	0752010-23	COWL ASSEMBLY-UPPER ----	1	
		ATTACHING PARTS		
- 3	S-1021Z-8-6	SCREW CESSNA STANDARD ----------	4	
		---*---		
- 4	0752000-19	STRIP-SPLICE ----------	1	
- 5	0752000-122	COWL ASSEMBLY-UPPER-----LESS NOSE CAP ----------	1	
- 6	0752000-55	SPOTWELD ASSEMBLY-UPPER COWL ----------	1	
- 7	0752000-63	ANGLE-STIFFENER ----------	2	
- 8	0752000-23	ANGLE-PARTING LINE LH ----------	1	
	0752000-24	ANGLE-PARTING LINE RH ----------	1	
- 9	NAS395-14-3	NUT TIN A1724-8Z-3----------	14	
- 10	0752000-49	ANGLE-DOOR OPENING LH ----------	1	
	0752000-48	ANGLE-DOOR OPENING RH ----------	1	
- 11	NAS395-13-3	NUT TIN A6077-8Z-3----------	4	
- 12	0752000-64	SPACER-LATCH----------	5	
- 13	0752000-56	DOOR ASSEMBLY-OIL FILTER ----------	1	
- 14	S-1188-1	LATCH-DOOR-----HWL ----------	1	
- 15	MS24665-134	PIN-COTTER----------	1	
- 16	0752000-117	HINGE ASSEMBLY-DOOR ----------	1	
- 17	0752011-5	NOSE CAP ASSEMBLY-UPPER ----------	1	
- 18	0752011-21	DOUBLER-NOSE CAP LH ----------	1	
	0752011-20	DOUBLER-NOSE CAP RH ----------	1	
- 19	0752012-2	COWL ASSEMBLY-LOWER COMPLETE ----------	1	A
	0752012-3	COWL ASSEMBLY-LOWER COMPLETE ----------	1	B
	0752012-5	COWL ASSEMBLY-LOWER COMPLETE ----------	1	C
		ATTACHING PARTS		
- 20	S-1022Z-8-8	SCREW CESSNA STANDARD ----------	18	
		---*---		
	0795201-1	COWL ASSEMBLY-LOWER-----LESS COWL FLAPS ----------	1	A
	0795201-2	COWL ASSEMBLY-LOWER-----LESS COWL FLAPS ----------	1	B
	0795201-3	COWL ASSEMBLY-LOWER-----LESS NOSE CAP ----------	1	C
- 21	0752000-126	COWL ASSEMBLY-LOWER LH----------	1	
	0752000-127	COWL ASSEMBLY-LOWER RH----------	1	
- 22	0752000-28	DOUBLER-DOOR OPENING FORWARD ----------	1	
- 23	0752000-29	DOUBLER-DOOR OPENING AFT----------	1	
- 24	0752000-61	DOUBLER-COWL LH----------	1	
	0752000-22	DOUBLER-COWL RH----------	1	
- 25	0752000-165	DOUBLER-COWL LH----------	1	
	0752000-166	DOUBLER-COWL RH----------	1	
- 26	0752007-1	SCOOP ASSEMBLY-AIR ----------	1	
- 27	0752007-9	RETAINER-SCOOP ----------	1	
- 28	0752007-11	SEAL-AIR SCOOP ----------	1	
	0752007-10	RETAINER-SCOOP ----------	1	
	0752007-12	SEAL-AIR SCOOP ----------	1	
- 29	0752008-495	NOSE CASTING ----------	1	
- 30	0752007-13	BOX ASSEMBLY-AIR SCOOP ----------	1	
- 31	0752007-3	SKIN-AIR SCOOP ----------	1	
- 32	0752007-4	SKIN-AIR SCOOP ----------	1	
- 33	0752000-36	STRIP-SPLICE----------	2	
- 34	0752000-152	DOUBLER-EXHAUST ----------	1	
- 35	0752000-144	DOUBLER-AIR INTAKE ----------	2	
- 36	0752000-135	STIFFENER-COWL LH----------	1	
	0752000-136	STIFFENER-COWL RH----------	1	
- 37	0752000-137	ANGLE-COWL LH ----------	1	
	0752000-138	ANGLE-COWL RH ----------	1	
- 38	0752000-35	SUPPORT-COWL----------	1	
- 39	0752000-15	STRIP-SPLICE----------	1	
- 40	0752011-1	NOSE CAP ASSEMBLY-LOWER ----------	1	
- 41	0752011-12	PLATE-NOSE CAP ----------	1	

180 SERIAL 32662 THRU 50661

CONTINUED ON PAGES 184 & 185

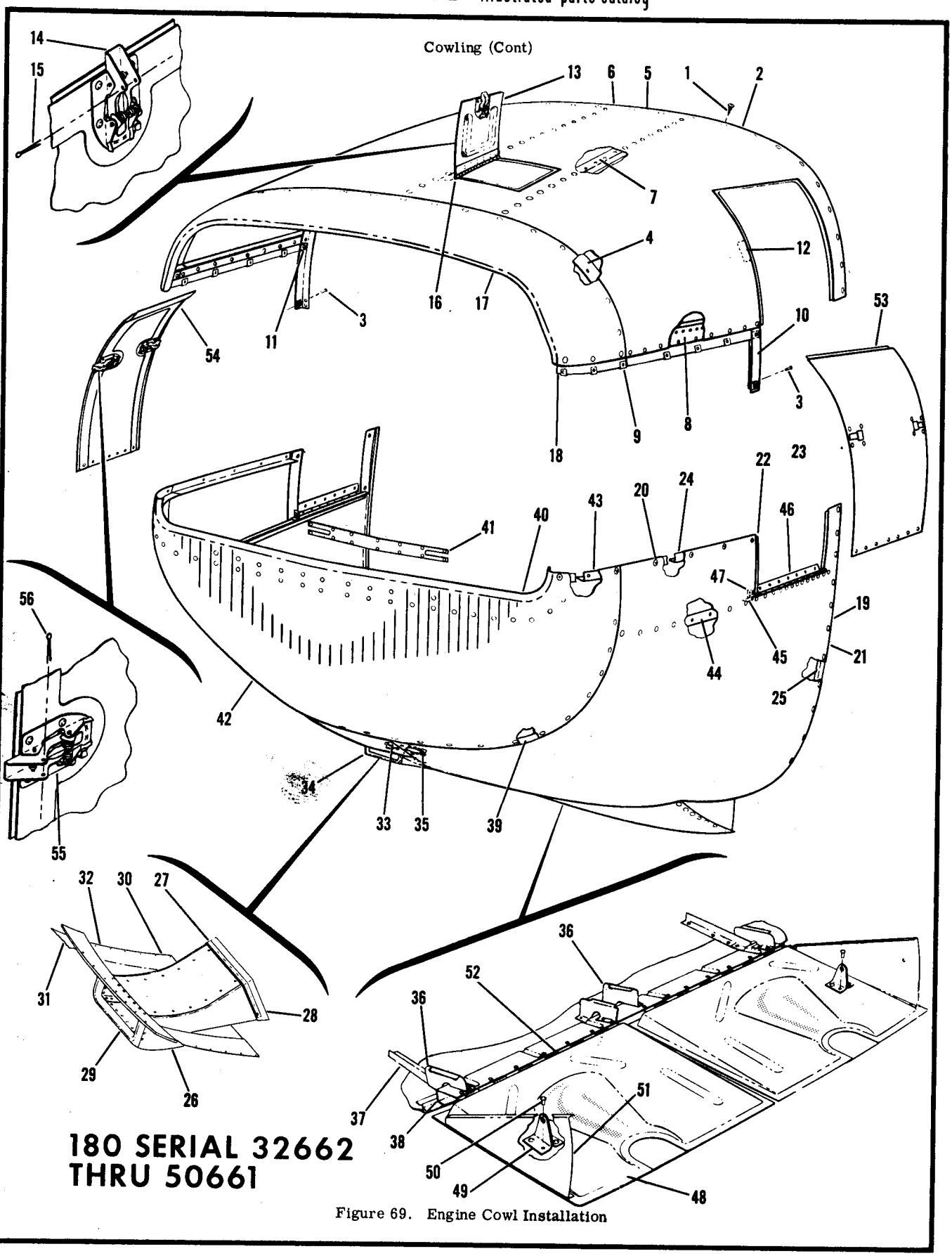

Figure 69. Engine Cowl Installation

FIGURE AND INDEX NO.	PART NUMBER	DESCRIPTION 1 2 3 4 5 6 7	UNITS PER ASSY	USABLE ON CODE
69- 42	0752011-4	SPOTWELD ASSEMBLY-NOSE CAP	1	
- 43	0752011-19	DOUBLER LH	1	
	0752011-18	DOUBLER RH	1	
- 44	0752000-119	ANGLE-STIFFENING LH	1	
	0752000-118	ANGLE-STIFFENING RH	1	
- 45	0752000-113	ANGLE LH	1	
	0752000-112	ANGLE RH	1	
- 46	0752000-116	HINGE ASSEMBLY-COWL DOOR	2	
- 47	NAS395-12-3	NUT TIN A1786-8Z-3	4	
- 48	0752000-143	FLAP ASSEMBLY-COWL LH	1	
	0752000-142	FLAP ASSEMBLY-COWL RH	1	
- 49	0752000-34	BRACKET-FLAP	2	
- 50	CR163-4-2	RIVET CY	4	
- 51	0752000-43	BAFFLE-FLAP LH	1	
	0752000-44	BAFFLE-FLAP RH	1	
- 52	0752000-116	HINGE ASSEMBLY-COWL FLAP	2	
	CR163-4-4	RIVET CY	8	
- 53	0752000-103	DOOR ASSEMBLY-COWL LH	1	
- 54	0752000-104	DOOR ASSEMBLY-COWL RH	1	
- 55	S-1188-1	LATCH-DOOR HWL	4	
- 56	MS24665-134	PIN-COTTER	4	
		A---180 SERIAL 32662 THRU 50105		
		B---180 SERIAL 50106 THRU 50355		
		C---180 SERIAL 50356 THRU 50661		

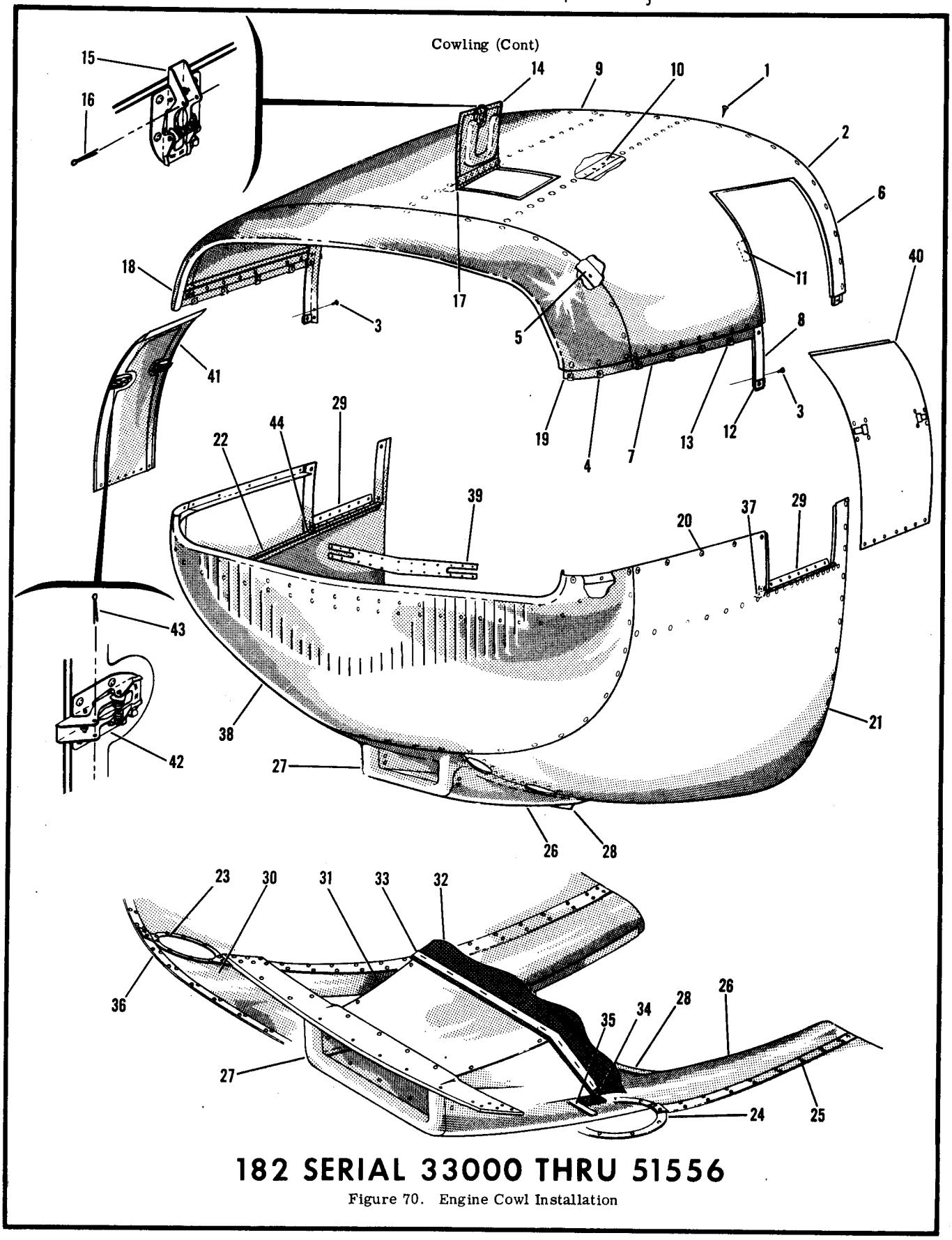

182 SERIAL 33000 THRU 51556

Figure 70. Engine Cowl Installation

FIGURE AND INDEX NO.	PART NUMBER	DESCRIPTION 1 2 3 4 5 6 7	UNITS PER ASSY	USABLE ON CODE
70-	0752010-1	COWL ASSEMBLY-ENGINE WHEN EXHAUSTED USE DETAIL PARTS ----	1	A
	0752010-79	COWL ASSEMBLY-ENGINE WHEN EXHAUSTED USE DETAIL PARTS ----	1	B
		ATTACHING PARTS		
- 1	S-1022Z-8-8	SCREW CESSNA STANDARD ---*---	56	
- 2	0752010-23	COWL ASSEMBLY-UPPER --	1	
		ATTACHING PARTS		
- 3	S-1021Z-8-6	SCREW CESSNA STANDARD ---*---	4	
- 4	NAS395-14-3	NUT TIN A1274-8Z-3	6	
- 5	0752000-19	STRIP-SPLICE	1	
- 6	0752000-122	COWL ASSEMBLY-UPPER-----LESS NOSE CAP	1	
- 7	0752000-23	ANGLE-SPLICE LH	1	
	0752000-24	ANGLE-SPLICE RH	1	
- 8	0752000-49	STIFFENER-DOOR OPENING LH	1	
	0752000-48	STIFFENER-DOOR OPENING RH	1	
- 9	0752000-55	SKIN ASSEMBLY-UPPER COWL		
- 10	0752000-63	ANGLE-STIFFENER	2	
- 11	0752000-64	SPACER-LATCH	5	
- 12	NAS-395-13-3	NUT TIN A6077-8Z-3	4	
- 13	NAS-395-14-3	NUT TIN A1274-8Z-3	4	
- 14	0752000-56	DOOR ASSEMBLY-OIL FILTER	1	
- 15	S-1188-1	LATCH-DOOR-----HWL	1	
- 16	MS24665-134	PIN-COTTER	1	
- 17	0752000-117	HINGE-DOOR	1	
- 18	0752011-5	NOSE CAP ASSEMBLY-UPPER	1	
- 19	0752011-21	DOUBLER-NOSE CAP LH	1	
	0752011-20	DOUBLER-NOSE CAP RH	1	
	0752010-22	COWL ASSEMBLY-LOWER	1	A
	0752010-80	COWL ASSEMBLY-LOWER	1	B
		ATTACHING PARTS		
- 20	S-1022Z-8-8	SCREW CESSNA STANDARD ---*---	18	
- 21	0752010-27	COWL SUBASSEMBLY-LH	1	A
	0752010-89	COWL SUBASSEMBLY-LH	1	B
	0752010-26	COWL SUBASSEMBLY-RH	1	A
	0752010-90	COWL SUBASSEMBLY-RH	1	B
- 22	0752000-118	ANGLE-RH	1	A
	0752010-94	ANGLE-RH	1	B
	0752000-119	ANGLE-LH	1	A
	0752010-93	ANGLE-LH	1	B
- 23	0752010-46	DOUBLER-AIR INTAKE RH	1	A
	0752010-88	DOUBLER-AIR INTAKE RH	1	B
	0752010-45	DOUBLER-AIR INTAKE LH	1	A
	0752010-87	DOUBLER-AIR INTAKE LH	1	B
- 24	0752010-13	DOUBLER-EXHAUST OPENING	1	
- 25	0752010-41	DOUBLER-LH	1	A
	0752010-84	DOUBLER-LH	1	B
	0752010-47	DOUBLER-RH	1	A
	0752010-85	DOUBLER-RH	1	B
- 26	0752010-48	SKIN ASSEMBLY-LOWER COWL	1	A
	0752010-86	SKIN ASSEMBLY-LOWER COWL	1	B
- 27	0752009-495	NOSE CASTING-COWL	1	
- 28	0752010-43	DEFLECTOR-AIR	1	
- 29	0752000-115	HINGE ASSEMBLY-DOOR	1	
- 30	0752010-24	SKIN-FRONT	1	

182 SERIAL 33000 THRU 51556

CONTINUED ON PAGE 188

FIGURE AND INDEX NO.	PART NUMBER	DESCRIPTION 1 2 3 4 5 6 7	UNITS PER ASSY	USABLE ON CODE
70- 31	0752010-25	BOX ASSEMBLY-AIRSCOOP	1	
- 32	0752007-11	SEAL-AIRSCOOP	1	
- 33	0752007-9	RETAINER-AIRSCOOP	1	
- 34	0752010-44	SEAL-AIRSCOOP	1	
- 35	0752007-10	RETAINER-AIRSCOOP	1	
- 36	0752000-15	STRIP-NOSE CAP	1	
- 37	0752000-113	ANGLE-LH	1	
	0752000-112	ANGLE-RH	1	
- 38	0752011-1	NOSE CAP ASSEMBLY-LOWER	1	
- 39	0752011-12	PLATE-NOSE CAP	1	
- 40	0752000-103	DOOR ASSEMBLY-LH	1	
- 41	0752000-104	DOOR ASSEMBLY-RH	1	
- 42	S-1188-1	LATCH-DOOR HWL	1	
- 43	MS24665-134	PIN-COTTER	4	
- 44	NAS395-12-3	NUT TIN A1786-8Z-6	4	
		A---182 SERIAL 33000 THRU 34753		
		B---182 SERIAL 34754 THRU 51556		

This page intentionally left blank.

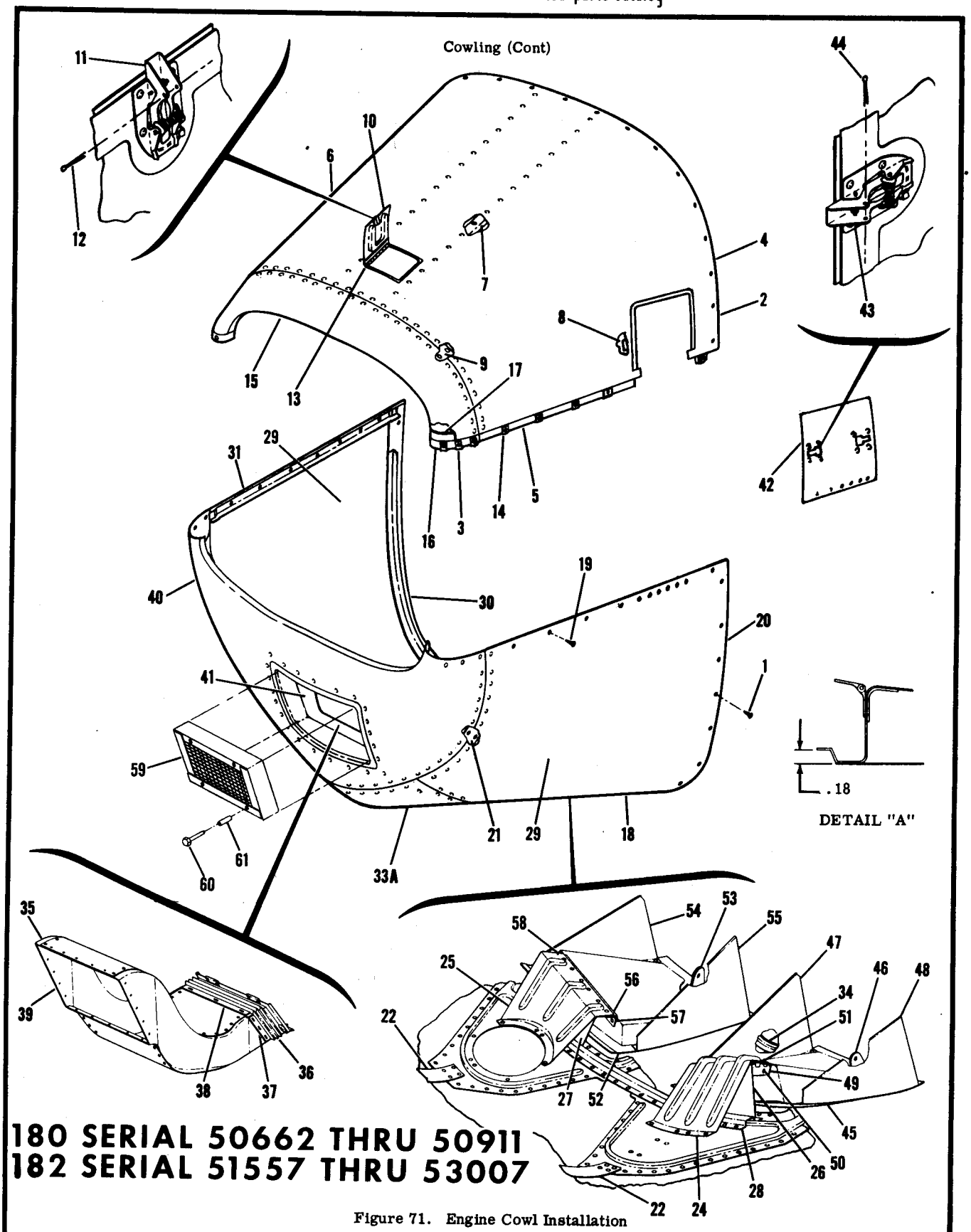

Figure 71. Engine Cowl Installation

FIGURE AND INDEX NO.	PART NUMBER		DESCRIPTION 1 2 3 4 5 6 7	UNITS PER ASSY	USABLE ON CODE
71-			COWL ASSEMBLY-ENGINE ----------	NP	A
			ATTACHING PARTS		
- 1	S-1022Z-8-8		SCREW CESSNA STANDARD ----------	56	
			---*---		
- 2	0752015-2		COWL ASSEMBLY-UPPER ----------	1	
- 3	NAS395-14-3		NUT TIN A1274-8Z-3 ----------	6	
- 4	0795202-1		COWL ASSEMBLY-UPPER-----LESS NOSE CAP ----------	1	
- 5	0752015-27		DOUBLER-LH ----------	1	
	0752015-26		DOUBLER-RH ----------	1	
- 6	0752015-29		COWL ASSEMBLY-UPPER ----180 SERIAL --------	1	
- 7	0752000-63		ANGLE-STIFFENER --	2	
- 8	0752000-64		SPACER-LATCH-------50662 THRU 50911	3	
- 9	0752000-19		STRIP-SPLICE----------	1	
- 10	0752000-56		DOOR ASSEMBLY-OIL---------182 SERIAL -------	1	
- 11	S-1188-1		LATCH-DOOR-----HWL ----182 SERIAL -------	1	
- 12	MS24665-134		PIN-COTTER-------51557 THRU 53007	1	
- 13	0752000-117		HINGE-DOOR-------51557 THRU 53007	1	
- 14	NAS395-14-3		NUT TIN A1274-8Z-3----------	8	
- 15	0752019-2		NOSE CAP ASSEMBLY-UPPER ----------	1	
- 16	0752019-7	*	DOUBLER-CAP SPLICE LH ----------	1	
	0752019-8	*	DOUBLER-CAP SPLICE RH ----------	1	
- 17	0752019-10		STRAP-REINFORCING----------	1	
	0752019-11		STRAP-REINFORCING----------	1	
- 18	0795202-2	**	COWL ASSEMBLY-LOWER LESS COWL FLAPS ----------	1	D
			ATTACHING PARTS		
- 19	S-1022Z-8-8		SCREW CESSNA STANDARD ----------	18	
			---*---		
- 20	0795202-3		COWL ASSEMBLY-LOWER-----LESS NOSE CAP ----------	1	D
- 21	0752015-10		DOUBLER-LOWER NOSE CAP----------	1	
- 22	0752015-31		DOUBLER-COWL SPLICE LOWER LH ----------	2	
- 23			DELETED-----REPLACE BY 0752015-31 ----------		
- 24	0752015-19		BRACKET-HINGE LH ----------	1	
- 25	0752015-39		BRACKET-HINGE RH ----------	1	
- 26	0752015-21		BRACKET-HINGE LH ----------	1	
- 27	0752015-22		BRACKET-HINGE RH ----------	1	
- 28	0752022-1		STIFFENER ----------	1	
- 29	0752015-7		SKIN ASSEMBLY-LOWER COWL SIDE LH ----------	1	
	0752015-9		SKIN ASSEMBLY-LOWER COWL SIDE RH ----------	1	
- 30	0752015-12		DOUBLER-RH----------	1	
	0752015-11		DOUBLER-LH----------	1	
- 31	0752015-14		ANGLE-RH ----------	1	
	0752015-13		ANGLE-LH ----------	1	
- 32			DELETED-----NOT PROCURABLE----------		
- 33			DELETED-----NOT PROCURABLE----------		
-33A	0752015-8		SKIN ASSEMBLY-LOWER COWL CENTER----------	1	
- 34	0752015-23		DOUBLER-STRUT OPENING ----------	1	
- 35	0752018-1		DUCT ASSEMBLY-CARBURETOR AIR INTAKE ----------	1	
- 36	0752016-1		EXPANDER ASSEMBLY----------	1	
	0752016-7		BOOT-EXPANDER ----------	1	
	0752027-1		GASKET ----------	1	
	99967-C-098		RECEPTACLE-----ALIC ----------	2	
	0752021-1		CLIP ----------	2	
- 37	0752023-1		STRIP-SIDE----------	2	
- 38	0752023-2		STRIP-TOP & BOTTOM ----------	2	
- 39	0752018-2		DUCT SUB ASSEMBLY----------	1	
- 40	0752019-1		NOSE CAP ASSEMBLY-LOWER ----------	1	
- 41	0752020-1		MOUNT ASSEMBLY ----------	1	
- 42	0752025-1		DOOR ASSEMBLY-COWL ACCESS ----------	1	
	0752025-7		HINGE ASSEMBLY----------	1	
- 43	S-1188-1		LATCH-DOOR HWL ----------	2	
- 44	MS24665-134		PIN-COTTER ----------	2	
- 45	0752014-1		FLAP ASSEMBLY-COWL LH----------	1	
- 46	0752014-17		BRACKET ----------	1	
- 47	0752014-9		BAFFLE-RH----------	1	
- 48	0752014-11		BAFFLE-LH----------	1	
- 49	0752014-15		HINGE ASSEMBLY----------	1	
			ATTACHING PARTS		
- 50	CR163C-4-4		RIVET CY ----------	6	
			---*---		
- 51	0752014-14		PIN-HINGE ----------	1	
- 52	0752014-2		FLAP ASSEMBLY-COWL RH----------	1	

CONTINUED ON PAGE 192

FIGURE AND INDEX NO.	PART NUMBER	DESCRIPTION 1 2 3 4 5 6 7	UNITS PER ASSY	USABLE ON CODE
71- 53	0752014-17	BRACKET	1	
- 54	0752014-10	BAFFLE-RH	1	
- 55	0752014-12	BAFFLE-LH	1	
- 56	0752014-15	HINGE ASSEMBLY	1	
		ATTACHING PARTS		
- 57	CR163C-4-4	RIVET CY	6	
		---*---		
- 58	0752014-14	PIN-HINGE	1	
- 59	0750146-1	FILTER ASSEMBLY-CARBURETOR	1	B
	0750038-1	FILTER ASSEMBLY-CARBURETOR	1	C
	0750146-3	GASKET	1	B
	0750038-3	GASKET	1	C
- 60	98293	STUD AL1C	4	
	99785-2	PIN AL1C	4	
- 61	NAS43-3-124	SPACER	4	B
		A---180 SERIAL 50662 THRU 50911 182 SERIAL 51557 THRU 53007 B---182 SERIAL 51557 THRU 52358 C---180 SERIAL 50662 THRU 50911 182 SERIAL 52359 THRU 53007 D---180 SERIAL 50662 THRU 50911 182 SERIAL 51557 THRU 53007 WHEN REPLACING LOWER COWL ON 182 SERIALS 51557 THRU 52056 SEE NOTE BELOW.		
		**NOTE. IF COWL FLAPS ON LOWER COWL BEING REPLACED DO NOT MEET MEASUREMENT OF DETAIL A OF THIS ILLUSTRATION ALSO ORDER 0752014-1 & 0752014-2 COWL FLAPS *NOTE. WHEN ORDERING THESE PARTS FOR AIRPLANES SERIAL 51557 THRU 52056 ALSO ORDER SK182-16		

FIGURE AND INDEX NO.	PART NUMBER	DESCRIPTION 1 2 3 4 5 6 7	UNITS PER ASSY	USABLE ON CODE
71A-		COWL ASSEMBLY-ENGINE	NP	A
- 1	0752031-27	COWL ASSEMBLY-UPPER WHEN EXHAUSTED USE 0752031-201	1	B
	0752031-201	COWL ASSEMBLY-UPPER	1	C
- 2	0752031-19	STRIP-PARTING LH	1	
	0752031-20	STRIP-PARTING RH	1	
- 3	4002-244-16	RECEPTACLE CLC	9	
	0752031-24	SKIN ASSEMBLY-UPPER	1	
- 4	0752031-26	ANGLE-UPPER COWL	2	
- 5	0752000-64	SPACER-LATCH	3	
- 6	0752031-22	STRIP-SPLICE	1	
- 6A	R4G	SNAP RING-----CLC	10	
	4002-H	GROMMET CLC	10	
	4002-4	STUD-----CLC	10	
- 7	0752000-56	DOOR ASSEMBLY-OIL	1	
- 8	S-1188-1	LATCH-DOOR HWL	1	
- 9	MS24665-134	PIN-COTTER	1	
- 10	0752000-117	HINGE-DOOR	1	
- 11	0752031-29	NOSE CAP ASSEMBLY-UPPER COWL-----WHEN EXHAUSTED USE 0752031-200	1	B
	0752031-200	NOSE CAP ASSEMBLY-UPPER COWL	1	C
- 12	0752030-5	DOUBLER-CAP SPLICE LH	1	
	0752030-6	DOUBLER-CAP SPLICE RH	1	
- 13	0752019-10	STRAP-REINFORCING	1	
	0752019-11	STRAP-REINFORCING	1	
- 14	0752032-1	RECEPTACLE	2	
- 15	0752031-28	COWL ASSEMBLY-LOWER LESS FLAPS & DOORS WHEN EXHAUSTED USE 0752031-203	1	B
	0752031-203	COWL ASSEMBLY-LOWER LESS FLAPS & DOORS	1	C
- 16	0752015-10	DOUBLER-LOWER NOSE CAP	1	
- 17	0752031-31	DOUBLER-COWL SPLICE LOWER LH	2	
- 18	0752015-19	BRACKET-HINGE LH	1	
- 19	0752015-39	BRACKET-HINGE RH	1	
- 20	0752015-21	BRACKET-HINGE LH	1	
- 21	0752015-22	BRACKET-HINGE RH	1	
- 22	0752022-1	STIFFENER	1	
		CONTINUED ON PAGES 193 & 193A		

180 SERIAL 18050912 & ON
182 SERIAL 18253008 & ON

Cowling (Cont)

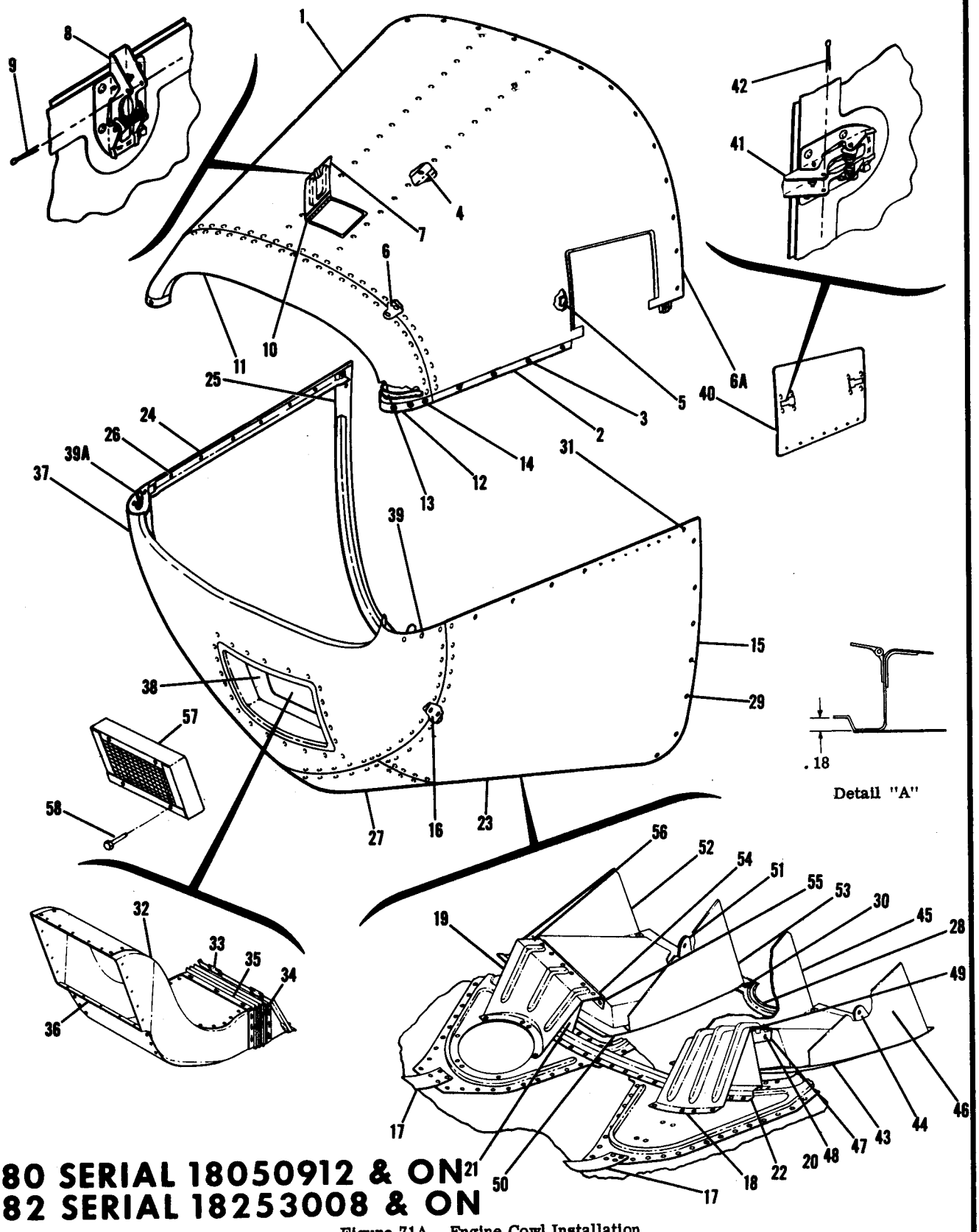

180 SERIAL 18050912 & ON
182 SERIAL 18253008 & ON

Figure 71A. Engine Cowl Installation

FIGURE AND INDEX NO.	PART NUMBER	DESCRIPTION 1 2 3 4 5 6 7	UNITS PER ASSY	USABLE ON CODE
71A- 23	0752031-7	SKIN ASSEMBLY-LOWER COWL SIDE LH	1	
- 24	0752031-8	SKIN ASSEMBLY-LOWER COWL SIDE RH	1	
- 25	0752031-16	DOUBLER-AFT RH	1	
	0752031-15	DOUBLER-AFT LH	1	
- 26	0752031-18	DOUBLER-LOWER PARTING RH	1	
	0752031-17	DOUBLER-LOWER PARTING LH	1	
- 27	0752015-8	SKIN ASSEMBLY-LOWER CENTER	1	
- 28	0752015-23	DOUBLER-STRUT OPENING	1	
- 29	R4G	SNAP RING-----CLC LOWER REAR SIDE	8	
	4002-H	GROMMET CLC LOWER REAR SIDE	8	
	4002-4	STUD-----CLC LOWER REAR SIDE	8	
- 30	R4G	SNAP RING-----CLC BOTTOM	2	
	4002-G	GROMMET CLC BOTTOM	2	
	4002-3	STUD-----CLC BOTTOM	2	
- 31	R4G	SNAP RING-----CLC LOWER PARTING	9	
	4002-H	GROMMET CLC LOWER PARTING	9	
	4002-4	STUD-----CLC LOWER PARTING	9	
- 32	0752018-1	DUCT ASSEMBLY-CARBURETOR AIR INTAKE	1	
- 33	0752016-1	EXPANDER ASSEMBLY	1	
	0752016-7	BOOT-EXPANDER	1	
	0752027-1	GASKET	1	
	99967-C-098	RECEPTACLE-----ALIC	2	
	0752021-1	CLIP	2	
- 34	0752023-1	STRIP-SIDE	2	
- 35	0752023-2	STRIP-TOP & BOTTOM	2	
- 36	0752018-2	DUCT SUB ASSEMBLY	1	
- 37	0752031-30	NOSE CAP ASSEMBLY-LOWER ----WHEN EXHAUSTED USE 0752031-202	1	B
	0752031-202	NOSE CAP ASSEMBLY-LOWER	1	C
- 38	0752020-1	MOUNT ASSEMBLY	1	
- 39	R4G	SNAP RING CLC	2	
	4002-H	GROMMET-----CLC	2	
	4002-4	STUD CLC	2	
-39A	0752013-2	CLIP-COWL NOSE RH	1	
	0752013-1	CLIP-COWL NOSE LH	1	
- 40	0752025-1	DOOR ASSEMBLY-COWL ACCESS	1	
	0752025-7	HINGE ASSEMBLY	1	
- 41	S-1188-1	LATCH-DOOR HWL	2	
- 42	MS24665-134	PIN-COTTER	2	
- 43	0752014-1	FLAP ASSEMBLY-COWL LH	1	
- 44	0752014-17	BRACKET	1	
- 45	0752014-9	BAFFLE-RH	1	
- 46	0752014-11	BAFFLE-LH	1	
- 47	0752014-15	HINGE ASSEMBLY	1	
		ATTACHING PARTS		
- 48	CR163C-4-4	RIVET CY	6	
		---*---		
- 49	0752609-2	PIN-HINGE	1	
- 50	0752014-2	FLAP ASSEMBLY-COWL RH	1	
- 51	0752014-17	BRACKET	1	
- 52	0752014-10	BAFFLE-RH	1	
- 53	0752014-12	BAFFLE-LH	1	
- 54	0752014-15	HINGE ASSEMBLY	1	
		ATTACHING PARTS		
- 55	CR163C-4-4	RIVET CY	6	
		---*---		
- 56	0752609-2	PIN-HINGE	1	
- 57	0750038-1	FILTER ASSEMBLY-CARBURETOR	1	
	0750146-1	FILTER ASSEMBLY-CARBURETOR FLOATPLANE ONLY	1	
	0750038-3	GASKET	1	
	0750146-3	GASKET-----FLOATPLANE ONLY	1	
- 58	98293-2-.250	STUD UC	4	
	99785-2	PIN UC	4	

A---180 SERIAL 18050912 & ON
182 SERIAL 18253008 THRU 18253598
B---180 SERIAL 18050912 THRU 18051063
182 SERIAL 18253008 THRU 18253598
C---180 SERIAL 18051064 & ON
182 SERIAL 18253008 THRU 18253598

This page intentionally left blank.

Propeller

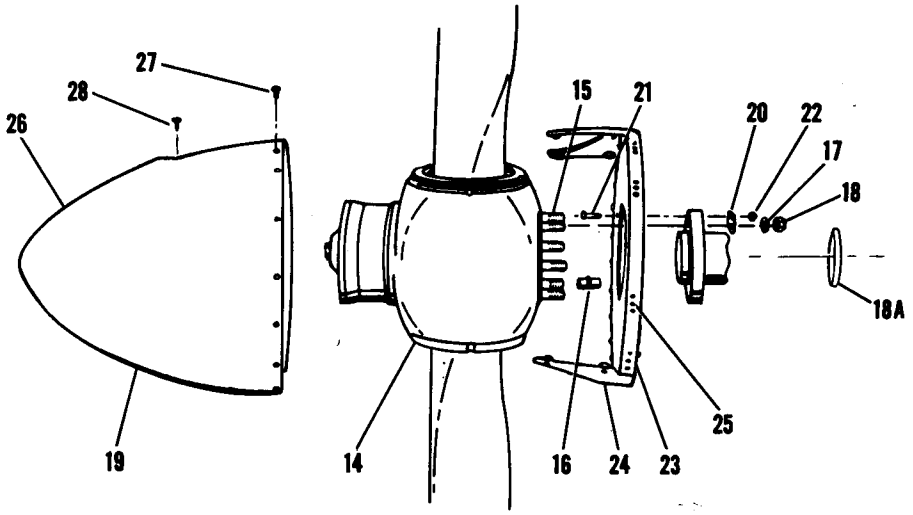

McCAULEY PROPELLER

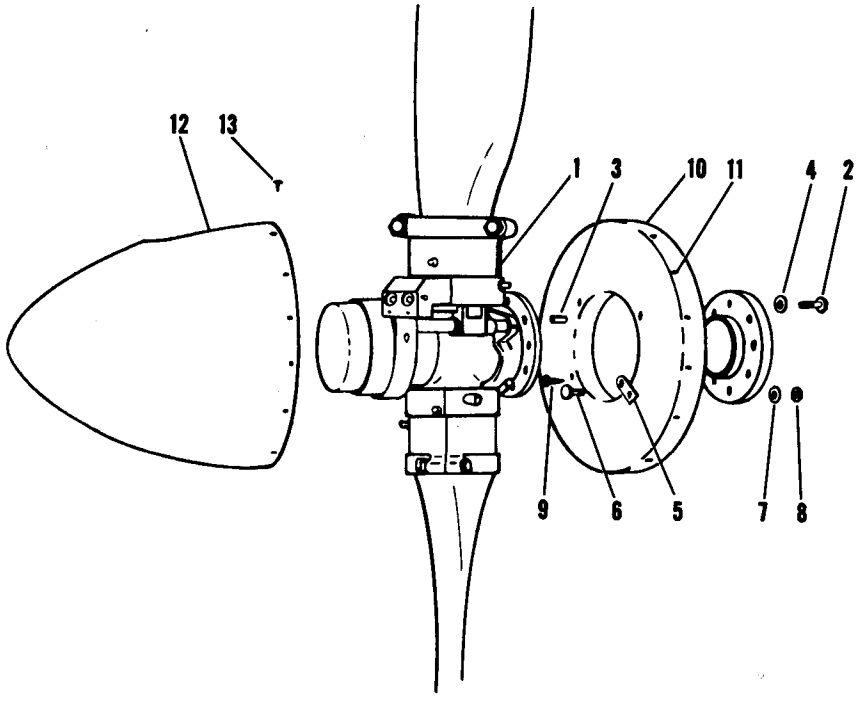

HARTZELL PROPELLER

180-182 ALL SERIALS

Figure 72. Propeller Installation

FIGURE AND INDEX NO.	PART NUMBER		DESCRIPTION 1 2 3 4 5 6 7	UNITS PER ASSY	USABLE ON CODE
72-			PROPELLER INSTALLATION	NP	
- 1	0752002-100		PROPELLER ASSEMBLY-HARTZELL HTP BHC-A2XF-1A 12.00 8433S	1	A
			SEE FIGURE 134		
	0752002-98		PROPELLER ASSEMBLY-HARTZELL HTP BHC-A2XF-1A 12.00 8433-2	1	B
			SEE FIGURE 134		
	0752002-102		PROPELLER ASSEMBLY-HARTZELL HTP BHC-A2XF-1A 12.00 8833S	1	C
			SEE FIGURE 134		
			ATTACHING PARTS		
- 2	AN8H7A	#	BOLT	6	
- 3	.5002X1	#	PIN-DOWEL DANLEY	2	
- 4	AN960-816	#	WASHER	6	
			---*---		
			SPINNER ASSEMBLY-PROPELLER---- FOR HARTZELL PROPELLERS ONLY		
			ATTACHING PARTS		
- 5	0752006-2	#	LUG	4	
- 6	AN4H5A		BOLT	4	
- 7	AN960-416L		WASHER	4	
- 8	MS20363-428		NUT	4	
- 9	AN4H-4A		SCREW	4	
			---*---		
- 10	0752006-1		BULKHEAD ASSEMBLY-PROPELLER SPINNER	1	
- 11	NAS680A3		NUTPLATE	14	
- 12	0850311-1		DOME-PROPELLER SPINNER	1	
			ATTACHING PARTS		
- 13	NAS221-8		SCREW	14	
			---*---		
- 14			PROPELLER ASSEMBLY-MCCAULEY MCL2A36C1/90M-8	1	D
			SEE FIGURE 135		
			PROPELLER ASSEMBLY-MCCAULEY MCL2A36C18/90M-8	1	E
			SEE FIGURE 135		
			PROPELLER ASSEMBLY-MCCAULEY MCL2A36C1/90M-2	1	C
			SEE FIGURE 135		
	0752024-3		PROPELLER ASSEMBLY-MCCAULEY 2A36C29-90M8	1	F
			SEE FIGURE 136		
	0752024-4		PROPELLER ASSEMBLY-MCCAULEY 2A36C29-90M2	1	G
			SEE FIGURE 136		
			ATTACHING PARTS		
- 15	A-1561-2	*	BOLT MCL	6	
- 16	A-1562	*	PIN-DOWEL MCL	2	
- 17	AN960-816	*	WASHER	6	
- 18	MS20365-820C		NUT	6	
-18A	A1633-3		O RING-----MCL	1	F
			---*---		
- 19			PROPELLER SPINNER INSTALLATION-----FOR MCCAULEY PROPELLERS ONLY	1	
			ATTACHING PARTS		
- 20	0752005-4		LUG	6	
- 21	AN509-10R16		SCREW	12	
- 22	MS20365-1032C		NUT	12	
			---*---		
- 23	0752004-6		BULKHEAD ASSEMBLY-SPINNER	1	
- 24	0752004-1		FILLET ASSEMBLY	2	
- 25	NAS680A3		NUTPLATE	4	
- 26	0752004-2		DOME-SPINNER	1	
			ATTACHING PARTS		
- 27	NAS221-8		SCREW	14	
- 28	AN520-10R7		SCREW	8	
			---*---		

180-182 ALL SERIALS

A---180 SERIAL 30000 & ON
B---182 SERIAL 33000 & ON
C---180, 180 AMPHIBIAN, 180 FLOATPLANE SERIAL 30000 THRU 50355
D---180 SERIAL 30000 THRU 32996
182 SERIAL 33000 THRU 34529
E---180 SERIAL 32997 THRU 50355
182 SERIAL 34530 THRU 51556
F---180 SERIAL 50356 & ON
182 SERIAL 51557 & ON
G---180, 180 AMPHIBIAN, 180 FLOATPLANE SERIALS 50356 & ON
#NOTE. THESE ITEMS ARE PART OF THE PROPELLER ASSEMBLIES SHOWN ON FIGURE 134.
*NOTE. THESE ITEMS ARE PART OF THE PROPELLER ASSEMBLIES SHOWN ON FIGURES 135 & 136.

Engine

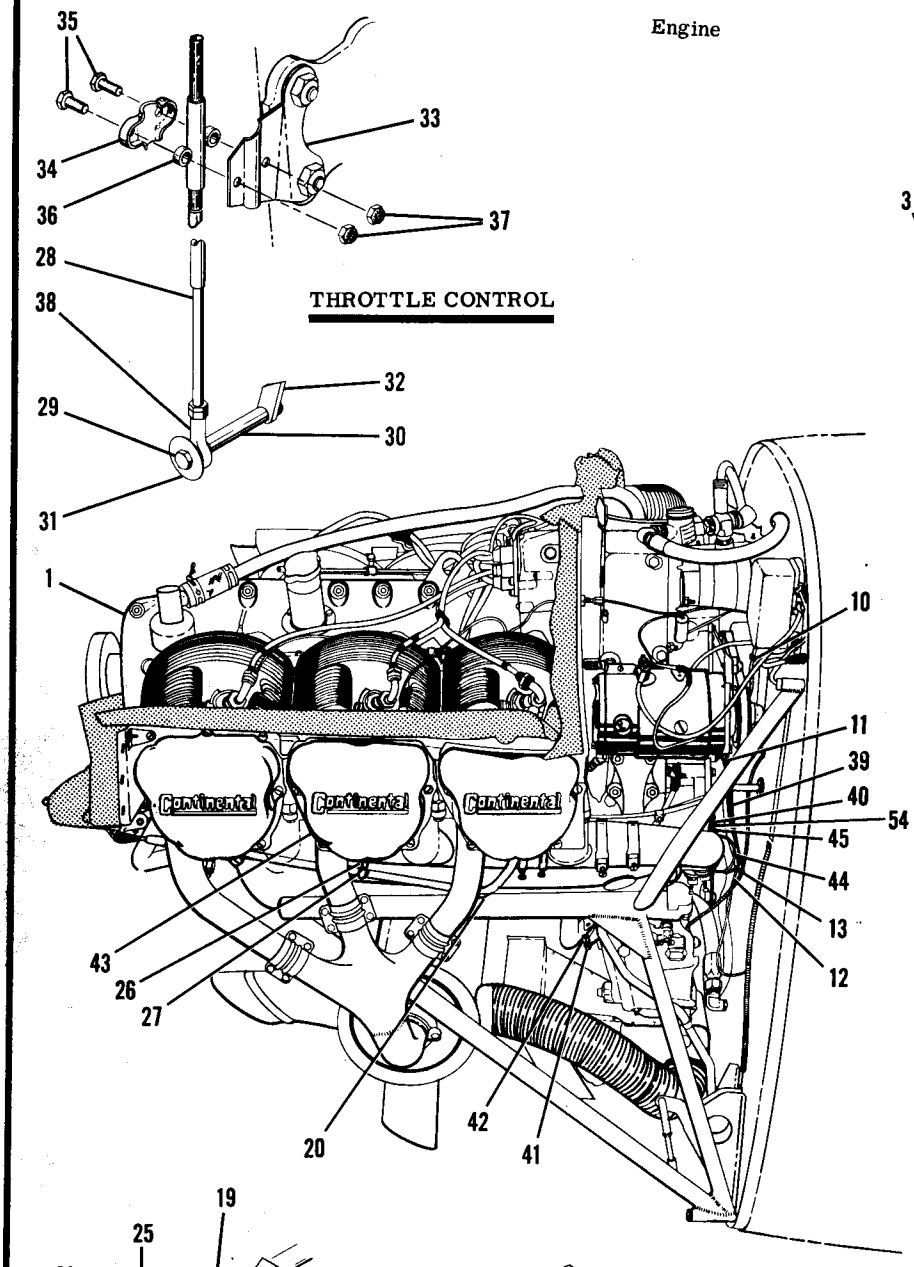

THROTTLE CONTROL

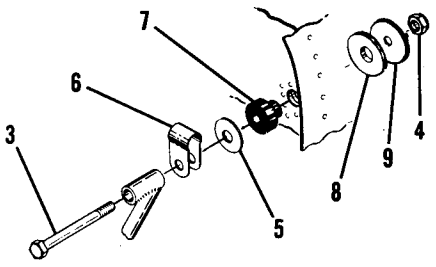

UPPER ENGINE MOUNT

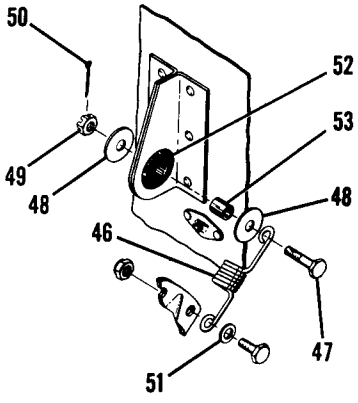

EXHAUST BRACKET ATTACHMENT

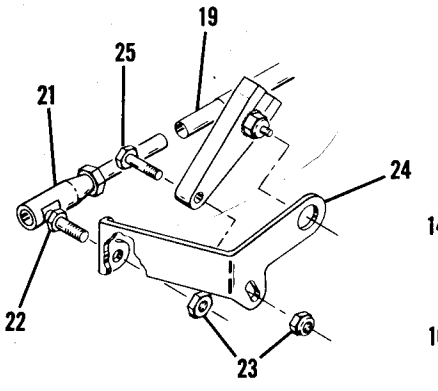

PROP GOV CONTROL

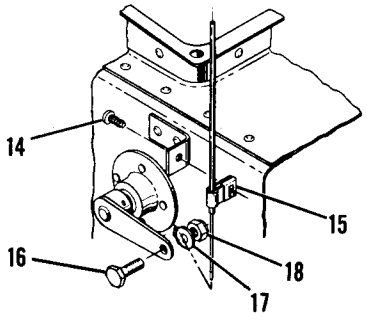

CARB HEAT CONTROL

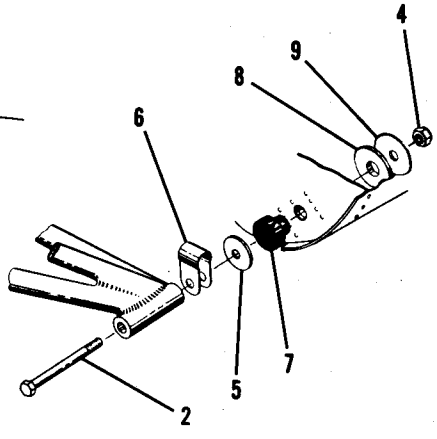

LOWER ENGINE MOUNT

180 SERIAL 30000 THRU 50661

Figure 73. Engine Installation

FIGURE AND INDEX NO.	PART NUMBER	DESCRIPTION	UNITS PER ASSY	USABLE ON CODE
		1 2 3 4 5 6 7		
73-		ENGINE INSTALLATION	NP	A
- 1		ENGINE ASSEMBLY SEE FIGURE 75	1	B
		ENGINE ASSEMBLY SEE FIGURE 75	1	C
		ENGINE ASSEMBLY SEE FIGURE 76	1	D
		ATTACHING PARTS		
- 2	AN6-36A	BOLT	2	M
	AN6-34A	BOLT	2	N
- 3	AN6-25A	BOLT	2	
- 4	MS20365-624C	NUT	4	
- 5	0550156	WASHER-ENGINE MOUNT	4	
- 6	0750100-9	STRAP-GROUND	4	
- 7	0550155	BUSHING-ENGINE MOUNT	4	
- 8	0550154-2	PAD-ENGINE MOUNT	4	
- 9	0550153-1	WASHER-ENGINE MOUNT	4	
		---*---		
- 10	AN742D2	CLAMP	1	E
	MS21919-2	CLAMP	1	F
		ATTACHING PARTS		
	S-1021Z-8-6	SCREW CESSNA STANDARD	1	
	NAS446-4-3	NUT TIN A1778-8Z-3	1	
		---*---		
- 11	0500106-105	LINE ASSEMBLY-PRIMER	1	
		ATTACHING PARTS		
	MS21919DG	CLAMP	1	
	NAS446-4-3	NUT TIN A1778-8Z-3	1	
	S-1021Z-8-6	SCREW CESSNA STANDARD	1	
		---*---		
- 12	0411090-22	CONTROL ASSEMBLY-CARBURETOR HEAT REF 0411090-21	1	G
	0713050	CONTROL ASSEMBLY-CARBURETOR HEAT	1	H
	0713050-2	CONTROL ASSEMBLY-CARBURETOR HEAT	1	P
		ATTACHING PARTS		
- 13	AN742D3	CLAMP	1	
	NAS446-4-3	NUT TIN A1778-8Z-3	1	
- 14	S-1021Z-8-6	SCREW CESSNA STANDARD	2	
- 15	A2981A-3-27	CLAMP TIN	1	
- 16	0450311-5	CLAMP-CARBURETOR HEAT CONTROL	1	
- 17	AN960-10L	WASHER	1	
- 18	MS20365-1032C	NUT	1	
		---*---		
- 19	0311031-4	CONTROL ASSEMBLY-PROPELLER	1	O
	0311031-5	CONTROL ASSEMBLY-PROPELLER	1	P
		ATTACHING PARTS		
- 20	A3047A-5	CLAMP TIN	1	I
	A2980A-14	CLAMP TIN	1	I
	A3047A-5-92	CLAMP TIN	1	J
	0550100-9	BRACKET-PROPELLER CONTROL	1	J
	S-1021Z-8-8	SCREW CESSNA STANDARD	1	
- 21	S-1186-1	BALL JOINT-PROPELLER CONTROL CESSNA STANDARD	1	
- 22	AN315-3R	NUT	1	
- 23	MS20365-1032C	NUT	2	
- 24	0750138	ARM-GOVERNOR CONTROL	1	
- 25	AN3-5A	BOLT	1	
- 26	0450191-1	CLAMP-PROPELLER CONTROL	1	
- 27	AN741-18P	CLAMP	1	
	AN936B10	WASHER	1	
	AN3-12A	BOLT	1	
	MS20365-1032C	NUT	1	
		---*---		

180 SERIAL 30000 THRU 50661

CONTINUED ON PAGE 198

FIGURE AND INDEX NO.	PART NUMBER	DESCRIPTION 1 2 3 4 5 6 7	UNITS PER ASSY	USABLE ON CODE
73- 28	0411091-8	CONTROL ASSEMBLY-THROTTLE	1	E
	0411091-19	CONTROL ASSEMBLY-THROTTLE	1	F
		ATTACHING PARTS		
- 29	AN4-30A	BOLT	1	K
	AN4-11A	BOLT	1	L
- 30	NAS43-4-128	SPACER	1	J
- 31	AN970-4	WASHER	1	
	AN960C416L	WASHER	1	J
- 32	MS20365-428C	NUT	1	
- 33	0750119	BRACKET-THROTTLE CONTROL	1	
- 34	S-351	CLAMP-THROTTLE CONTROL CESSNA STANDARD	1	
- 35	AN3-6A	BOLT	2	
- 36	NAS43-3-9	SPACER	2	
- 37	MS20365-1032C	NUT	2	
- 38	S-1106-4	ROD END-THROTTLE CONTROL CESSNA STANDARD	1	
		---*---		
- 39	0411090-22	CONTROL ASSEMBLY-CARBURETOR MIXTURE-----REF 0411090-21	1	O
	0713050-2	CONTROL ASSEMBLY-CARBURETOR MIXTURE	1	P
		ATTACHING PARTS		
- 40	A2980A-4-27	CLAMP TIN	1	
- 41	0450311-4	CLAMP-MIXTURE CONTROL	1	
	MS20365-428C	NUT	1	
	AN960-416L	WASHER	2	
- 42	AN742D3	CLAMP	1	
	AN742D7	CLAMP	1	
	AN3-3A	BOLT	1	
	MS20365-1032C	NUT	1	
	AN960-10L	WASHER	1	
		---*---		
- 43	0450261	ADAPTER-OIL TEMPERATURE LEAD TO ENGINE	1	E
	0750139	ADAPTER-OIL TEMPERATURE LEAD TO ENGINE	1	F
		ATTACHING PARTS		
	A3047A-4-92	CLAMP TIN	1	
	AN742D36	CLAMP	2	
	S-1021Z-8-8	SCREW CESSNA STANDARD	2	
		---*---		
- 44	0713041	CONTROL ASSEMBLY-COWL FLAP	1	
		ATTACHING PARTS		
- 45	A2982A-3-27	CLAMP TIN	1	
	S-1021Z-8-6	SCREW CESSNA STANDARD	1	
		---*---		
- 46	0750115	SPRING-TAILPIPE SUPPORT	2	G
		ATTACHING PARTS		
- 47	AN3-6	BOLT	1	G
- 48	0750100-14	WASHER-TAILPIPE	2	G
- 49	AN320-3	NUT	1	G
- 50	MS24665-134	PIN-COTTER	1	G
- 51	AN960-10L	WASHER	1	G
		---*---		
- 52	MS35489-9	GROMMET	2	G
- 53	NAS43-3-20	SPACER	2	G
- 54	0500106-107	LINE ASSEMBLY-MANIFOLD PRESSURE FIREWALL TO ENGINE	1	Q
	0500106-223	LINE ASSEMBLY-MANIFOLD PRESSURE FIREWALL TO BAFFLE	1	R
	0500106-224	LINE ASSEMBLY-MANIFOLD PRESSURE BAFFLE TO NO. 1 CYLINDER	1	R

A---180 SERIAL 30000 THRU 50661
B---180 SERIAL 30000 THRU 31260
C---180 SERIAL 31261 THRU 32150
D---180 SERIAL 32151 THRU 50661
E---180 SERIAL 30000 THRU 32661
F---180 SERIAL 32662 THRU 50661
G---180 SERIAL 30000 THRU 32150
H---180 SERIAL 32151 THRU 50355
I---180 SERIAL 30061 THRU 30881
J---180 SERIAL 30882 THRU 50661
K---180 SERIAL 30000 THRU 50055
L---180 SERIAL 50056 THRU 50661
M---180 SERIAL 30000 THRU 32492
N---180 SERIAL 32493 THRU 50661
O---180 SERIAL 30000 THRU 50355
P---180 SERIAL 50356 THRU 50661
Q---180 SERIAL 30000 THRU 32661, 50220 THRU 50661
R---180 SERIAL 32662 THRU 50219
NOTE. FOR ACCESSORY KIT LISTINGS REFER TO PAGES 372 THRU 374B

FIGURE AND INDEX NO.	PART NUMBER	DESCRIPTION 1 2 3 4 5 6 7	UNITS PER ASSY	USABLE ON CODE
74-		ENGINE INSTALLATION	NP	A
- 1		ENGINE ASSEMBLY SEE FIGURE 77	1	
		ATTACHING PARTS		
- 2	AN6-34A	BOLT 180 SERIAL	2	
	AN6-35A	BOLT FLOATPLANE ONLY	2	
- 3	AN6-25A	BOLT 50662 & ON	2	
	AN6-26A	BOLT FLOATPLANE ONLY	2	
- 4	MS20365-624C	NUT	4	
- 5	0750100-9	STRAP-GROUND 182 ALL SERIALS	4	
- 6	0550155	BUSHING-ENGINE MOUNT	4	
	0751004-1	BUSHING-ENGINE MOUNT FLOATPLANE ONLY	4	N
- 7	0550154-2	PAD-ENGINE MOUNT	4	
	0751004-2	PAD-ENGINE MOUNT-----FLOATPLANE ONLY	4	N
- 8	0550153-1	WASHER-ENGINE MOUNT	4	
- 9	0550156	WASHER-ENGINE MOUNT	4	
		---*---		
- 10	AN742D2	CLAMP	1	B
	A2980A-14-27	CLAMP	1	K
	A2980A-20-27	CLAMP	1	K
		ATTACHING PARTS		
	NAS446-4-3	NUT TIN A1778-8Z-3	1	
	S-1021Z-8-6	SCREW CESSNA STANDARD	1	
		---*---		
- 11	0500106-202	LINE ASSEMBLY-PRIMER	1	
		ATTACHING PARTS		
	MS21919DG2	CLAMP	1	
	S-1021Z-8-6	SCREW CESSNA STANDARD	1	
	NAS446-4-3	NUT TIN A1778-8Z-3	1	
		---*---		
- 12	0713050	CONTROL ASSEMBLY-CARBURETOR HEAT	1	B
	0411090-22	CONTROL ASSEMBLY-CARBURETOR HEAT REF 0411090-8	1	M
	0713302-5	CONTROL ASSEMBLY-CARBURETOR HEAT REF 0713302-3	1	L
		ATTACHING PARTS		
- 13	AN742D3	CLAMP	1	
	NAS446-4-3	NUT TIN A1778-8Z-3	1	
	S-1021Z-8-6	SCREW CESSNA STANDARD	1	
- 14	AN742-4	CLAMP	1	
- 15	AN3-3A	BOLT	1	
	MS20365-1032C	NUT	1	
- 16	0450311-5	CLAMP-CARBURETOR HEAT	1	
- 17	AN960-10L	WASHER	1	
- 18	MS20365-1032C	NUT	1	
		---*---		
- 19	0311031-4	CONTROL ASSEMBLY-PROPELLER	1	H
	0311031-5	CONTROL ASSEMBLY-PROPELLER	1	I
		ATTACHING PARTS		
- 20	S-1186-1	BALL JOINT-PROPELLER CONTROL CESSNA STANDARD	1	
- 21	MS20365-1032C	NUT	3	
- 22	AN315-3R	NUT	1	
- 23	0750138	ARM-PROPELLER CONTROL	1	
- 24	AN3-5A	BOLT	1	
- 25	0450191-1	CLAMP-PROPELLER CONTROL	1	
- 26	AN741-18P	CLAMP	1	
	AN3-11A	BOLT	1	
	AN936B10	WASHER	2	
- 27	0550100-9	BRACKET-PROPELLER CONTROL	1	
- 28	A3047A-5-92	CLAMP TIN	1	
	S-1021Z-8-8	SCREW CESSNA STANDARD	1	
		---*---		

CONTINUED ON PAGES 200 & 201

Engine (Cont)

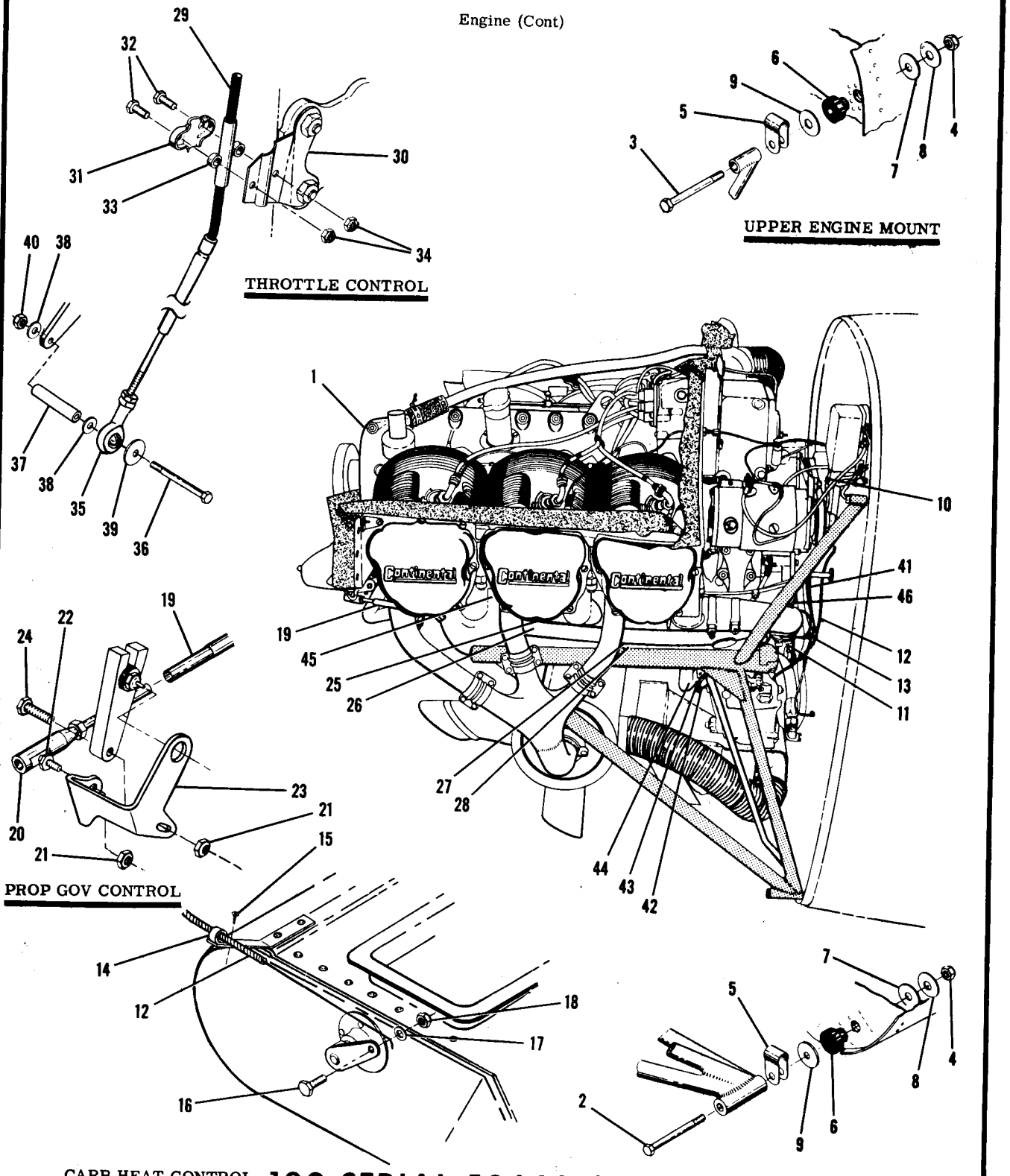

180 SERIAL 50662 & ON
182 ALL SERIALS

Figure 74. Engine Installation

FIGURE AND INDEX NO.	PART NUMBER	DESCRIPTION 1 2 3 4 5 6 7	UNITS PER ASSY	USABLE ON CODE
74- 29	0411091-19	CONTROL ASSEMBLY-THROTTLE	1	H
	S-1222-1	CONTROL ASSEMBLY-THROTTLE ----CESSNA STANDARD----	1	I
		ATTACHING PARTS		
- 30	0750119	BRACKET-THROTTLE CONTROL	1	
- 31	S-351	CLAMP-THROTTLE CONTROL CESSNA STANDARD	1	
- 32	AN3-6A	BOLT	2	
- 33	NAS43-3-9	SPACER	2	
- 34	MS20365-1032C	NUT	2	
- 35	S-1106-4	ROD END-THROTTLE CONTROL CESSNA STANDARD	1	
- 36	AN4-35A	BOLT	1	F
	AN4-11A	BOLT	1	G
- 37	NAS43-4-168	SPACER	1	F
- 38	AN960C416L	WASHER	2	F
- 39	AN970-4	WASHER	1	G
- 40	MS20365-428C	NUT	1	
		---*---		
- 41	0411090-22	CONTROL ASSEMBLY-MIXTURE REF 0411090-21	1	H
	0713050-2	CONTROL ASSEMBLY-MIXTURE	1	I
		ATTACHING PARTS		
- 42	0450311-4	CLAMP-MIXTURE CONTROL	1	
	MS20365-428C	NUT	1	
	AN960-416L	WASHER	2	
- 43	AN742D-4	CLAMP	1	
- 44	0750159-1	CLIP-MIXTURE CONTROL	1	
	AN3-3A	BOLT	1	
	MS20365-1032C	NUT	1	
	AN742-4	CLAMP	1	L
	MS21919D6-11	CLAMP	1	L
	S-1021Z-8-6	SCREW CESSNA STANDARD	1	L
		---*---		
- 45	0450261	ADAPTER-OIL TEMPERATURE	1	B
	0750139	ADAPTER-OIL TEMPERATURE	2	C
		ATTACHING PARTS		
	AN900-10	GASKET	1	C
	A3047A-4-92	CLAMP TIN	2	
	AN742D36	CLAMP	2	
	S-1021Z-8-8	SCREW CESSNA STANDARD	2	
	MS21919DG4	CLAMP	1	
	S-1021Z-8-6	SCREW CESSNA STANDARD	1	
	NAS446-4-3	NUT TIN A1778-8Z-3	1	
		---*---		
- 46	0500106-199	LINE ASSEMBLY-MANIFOLD PRESSURE FIREWALL TO ENGINE ----	1	D
	0500106-223	LINE ASSEMBLY-MANIFOLD PRESSURE FIREWALL TO BAFFLE ----	1	E
	0500106-224	LINE ASSEMBLY-MANIFOLD PRESSURE BAFFLE TO NO. 1 CYLINDER	1	E
		ATTACHING PARTS		
	MS21919DG2	CLAMP	1	
	S-1021Z-8-6	SCREW CESSNA STANDARD	1	
	NAS446-4-3	NUT TIN A1778-8Z-3	1	
	0750282-1	ADAPTER	1	
		---*---		

A---180 SERIAL 50662 & ON
182 SERIAL 33000 & ON
B---182 SERIAL 33000 THRU 33842
C---182 SERIAL 33843 & ON
D---180 SERIAL 50662 & ON
182 SERIAL 33000 THRU 33842 & 51038 & ON
E---182 SERIAL 33843 THRU 51037
F---182 SERIAL 33000 THRU 34700
G---182 SERIAL 34701 & ON
H---182 SERIAL 33000 THRU 51556
I---180 SERIAL 50662 & ON
182 SERIAL 51557 & ON
J---182 SERIAL 51557 & ON
K---182 SERIAL 33843 THRU 52358
L---180 SERIAL 50662 & ON
182 SERIAL 52359 & ON
M---182 SERIAL 33843 THRU 51556
N---180 FLOATPLANE SERIAL 18050913 & ON

NOTE. FOR ACCESSORY KIT LISTINGS REFER TO PAGES 372 THRU 374B

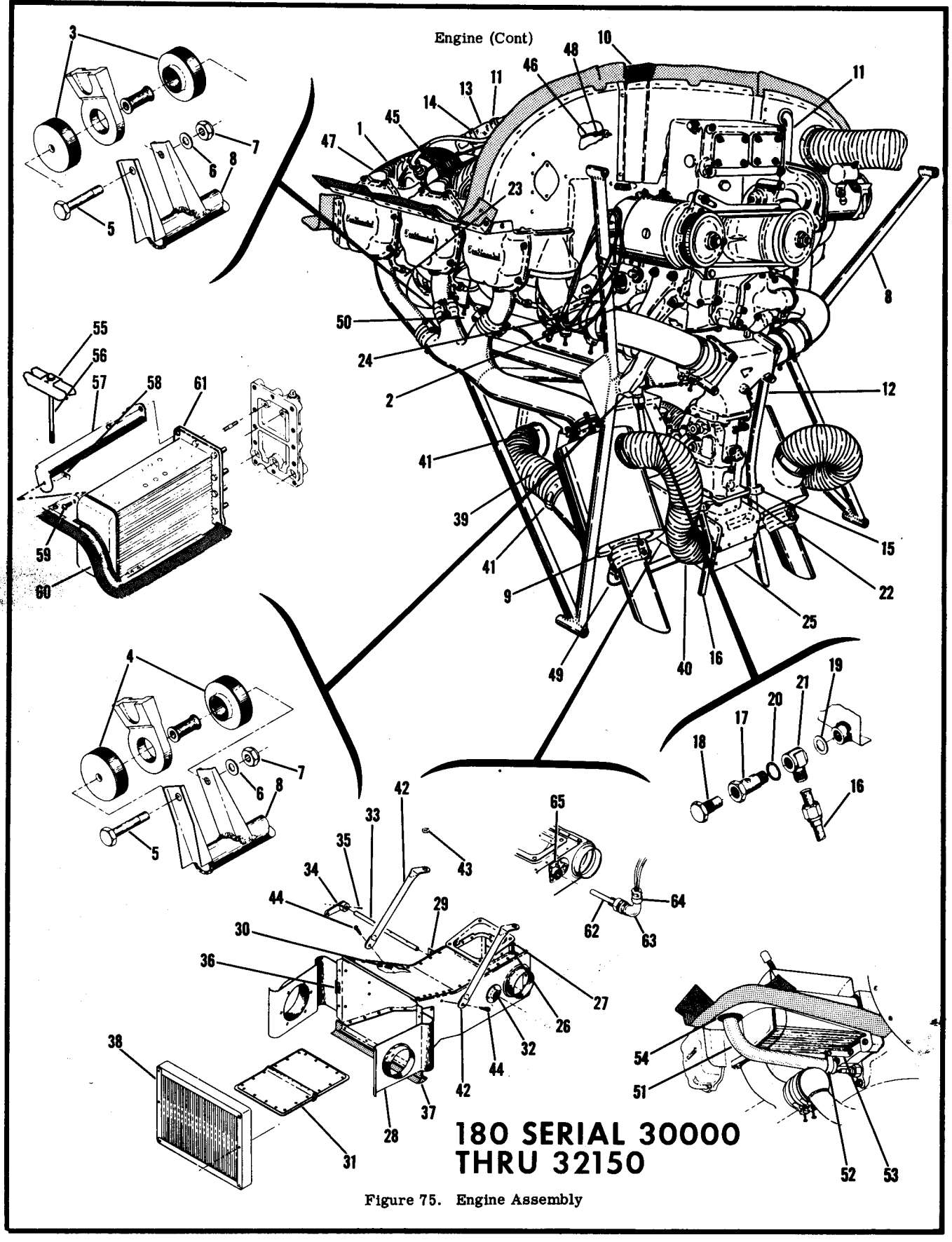

Figure 75. Engine Assembly

FIGURE AND INDEX NO.	PART NUMBER	DESCRIPTION 1 2 3 4 5 6 7	UNITS PER ASSY	USABLE ON CODE
75-		ENGINE ASSEMBLY-CONTINENTAL	NP	A
- 1	0-470-A	ENGINE-----CM ----------180 SERIAL------	1	B
	0-470-J	ENGINE-----CM ----------30000 THRU 32150.	1	C
		ATTACHING PARTS		
- 2	0750100-13	BONDING STRAP-ENGINE --	1	
- 3	0750102-1	SHOCK MOUNT-ENGINE FRONT	2	
- 4	0750102-2	SHOCK MOUNT-ENGINE REAR	2	
- 5	AN7-27A	BOLT	4	
- 6	AN960-716	WASHER	4	
- 7	MS20365-720C	NUT	4	
		---*---		
- 8	0751000	MOUNT-ENGINE	1	
- 9	0750290-27	STACK ASSEMBLY-EXHAUST LH ----SEE FIGURE 82	1	
	0750290-28	STACK ASSEMBLY-EXHAUST RH ----SEE FIGURE 82	1	
- 10		BAFFLE ASSEMBLY-ENGINE SEE FIGURE 78	NP	
- 11	0500106-102	TUBE-BREATHER LINE FORWARD	1	D
	0500106-158	TUBE-BREATHER LINE FORWARD	1	E
	0500106-160	TUBE-BREATHER LINE FORWARD	1	F
	0500106-164	TUBE-BREATHER LINE FORWARD	1	C
- 12	0500106-100	TUBE-BREATHER LINE REAR	1	
		ATTACHING PARTS		
- 13	S-51-12	HOSE-3.00 IN. LG. BULK ITEM REF S-51-12-12	2	
		CESSNA STANDARD		
- 14	A3122-18-1	CLAMP TIN	4	
- 15	0750100-5	STRAP-BREATHER LINE	1	
	A2981A-12	CLAMP TIN	1	
	S-1021Z-8-8	SCREW CESSNA STANDARD	1	
		---*---		
- 16	0500106-138	TUBE-OIL DRAIN LINE	1	G
	0500106-157	TUBE-OIL DRAIN LINE	1	H
	0500106-163	TUBE-OIL DRAIN LINE	1	C
		ATTACHING PARTS		
- 17	0750109	VALVE-OIL DRAIN	1	
- 18	0750110	PLUG-OIL VALVE	1	
- 19	0750108	GASKET-OIL VALVE	1	
- 20	AN900-12	GASKET-OIL PLUG	1	
- 21	AN776-8D	ELBOW	1	
- 22	0750100-17	STRAP-OIL DRAIN	1	
	A2981A8-27	CLAMP TIN	1	
	S-1021Z-8-8	SCREW CESSNA STANDARD	1	
		---*---		
- 23	0750101-3	GOVERNOR-PROPELLER SEE FIGURE 128A	1	
- 24	0311018-11	THERMOCOUPLE	1	
		ATTACHING PARTS		
	AN515B6-5	SCREW	2	
	AN936A6B	WASHER	2	
		---*---		
	S-292-8	SLEEVE-INSTALLATION CESSNA STANDARD	1	
- 25	0750111	AIR BOX ASSEMBLY-CARBURETOR	1	
		ATTACHING PARTS		
- 26	AN74A3	BOLT	4	
- 27	0750100-6	WASHER	4	
		---*---		
- 28	0750111-13	BRACKET ASSEMBLY-LH	1	
	0750111-14	BRACKET ASSEMBLY-RH	1	
- 29	0750111-10	ANGLE-CARBURETOR AIR BOX	1	
- 30	NAS680A3	NUTPLATE	2	
- 31	0750111-24	VALVE ASSEMBLY-AIR	1	
- 32	0750113-1	HOUSING-VALVE SHAFT	2	
- 33	0750112	SHAFT-VALVE	1	
- 34	0750111-19	ARM ASSEMBLY-VALVE	1	
- 35	MS16562-16	ROLL PIN EN	1	
- 36	99871C.098	NUT ALIC	2	
- 37	0752001-1	SEAL-CARBURETOR AIR BOX	1	
- 38	0750114	FILTER-AIR BOX	1	
	0750114-2	GASKET-FILTER	1	
- 39	S-1053E20T	HOSE-CARBURETOR HEAT 12 IN. LONG BULK ITEM	1	
		REF S-1053E20T12.0 CESSNA STANDARD		
- 40	S-1053K20T	HOSE-CARBURETOR HEAT 15 IN. LONG BULK ITEM	1	
		REF S-1053K20W15.0 CESSNA STANDARD		
		ATTACHING PARTS		
- 41	A3122-42-1	CLAMP TIN	4	
		---*---		

CONTINUED ON PAGE 204

FIGURE AND INDEX NO.	PART NUMBER	DESCRIPTION	UNITS PER ASSY	USABLE ON CODE
		1 2 3 4 5 6 7		
75- 42	0750123	SUPPORT-CARBURETOR AIR BOX	2	
		ATTACHING PARTS		
- 43	AN960D516L	WASHER	1	
- 44	AN520-10R8	SCREW	1	
		---*---		
- 45	0500106-103	PRIMER LINE-FORWARD	1	J
	0500106-171	PRIMER LINE-CYLINDER #6 TO TEE	1	K
- 46	0500106-104	PRIMER LINE-REAR	1	J
	0500106-172	PRIMER LINE-CYLINDER #4 TO TEE	1	K
		ATTACHING PARTS		
- 47	AN4022-1	NIPPLE	2	
- 48	AN834-2D	TEE	1	
	AN960D516	WASHER	1	J
	AN960D516	WASHER	4	K
	AN924-2D	NUT	1	J
	AN924-2D	NUT	2	K
	AN832-2D	UNION	1	K
		---*---		
	0500106-170	PRIMER LINE-TEE TO BAFFLE	1	K
	0500100-5	BRACKET-PRIMER LINE	1	K
		FUEL PRIMER SIX LINE SYSTEM INSTALLATION-----SEE FIGURE 102	NP	
- 49	0750100-23	TUBE-EXHAUST STACK STABILIZER	1	
- 50	0750121	DEFLECTOR ASSEMBLY	2	L
	0750121	DEFLECTOR ASSEMBLY	6	A
- 51	0750106-1	TUBE-BLAST	1	M
		ATTACHING PARTS		
- 52	A298A-16-27	CLAMP TIN	1	
	S-1021Z-10-8	SCREW CESSNA STANDARD	1	
- 53	0750106-2	BRACKET-BLAST TUBE	1	
		---*---		
- 54	MS35489-23	GROMMET	1	M
	SK8054-3	LARGE OIL COOLER INSTALLATION	1	N
- 55	0750117-31	SUPPORT-INTER CYLINDER	1	
- 56	AN3-37A	BOLT	1	
- 57	0750117-52	BAFFLE ASSEMBLY	1	
- 58	NAS446-5-3	NUT TIN A1779-10Z-B	1	
- 59	S-1021Z-10-6	SCREW CESSNA STANDARD	1	
- 60	0750117-53	BAFFLE ASSEMBLY	1	
- 61	EQ5491S	OIL COOLER CM	1	
		CARBURETOR AIR TEMPERATURE GAGE INSTALLATION	NP	
		DETAILS-ENGINE COMPARTMENT		
- 62	AN5525-1	BULB-CARBURETOR AIR TEMPERATURE	1	
- 63	MS3108-12S-3S	PLUG	1	
- 64	MS3057-4A	ADAPTER	1	
- 65	0411849-1 *	PLATE-NUT	1	

A---180 SERIAL 30000 THRU 32150
B---180 SERIAL 30000 THRU 31260
C---180 SERIAL 31261 THRU 32150
D---180 SERIAL 30000 THRU 30639
E---180 SERIAL 30640 THRU 30816
F---180 SERIAL 30817 THRU 31260
G---180 SERIAL 30000 THRU 30373, 30375 THRU 30378, 30380 THRU 30390, 30394, 30396, 30399, 30401, 30402, 30418, 30422, 30438 THRU 30440, 30442, 30453.
H---180 SERIAL 30374, 30379, 30391 THRU 30393, 30395, 30397, 30398, 30400, 30404 THRU 30417, 30419 THRU 30421, 30423 THRU 30437, 30441, 30443 THRU 30452, 30454 THRU 31260.
J---180 SERIAL 30000 THRU 31340
K---180 SERIAL 31341 THRU 32150
L---180 SERIAL 30906 THRU 31260
M---180 SERIAL 30316 THRU 32150
N---180 SERIAL 31177 THRU 32150
*NOTE. INSTALL PER AK8053-1 INSTRUCTIONS
NOTE. FOR ACCESSORY KIT LISTINGS REFER TO PAGES 372 THRU 374B

FIGURE AND INDEX NO.	PART NUMBER	DESCRIPTION 1 2 3 4 5 6 7	UNITS PER ASSY	USABLE ON CODE
76-		ENGINE ASSEMBLY-CONTINENTAL	NP	A
- 1	0-470-K	ENGINE-----CM	1	
		ATTACHING PARTS		
- 2	0750137	BONDING STRAP-ENGINE MOUNT	4	
- 3	0750132-1	SHOCK MOUNT ASSEMBLY-ENGINE --180 SERIAL	4	
- 4	0750132-2	SPACER-BONDED	4	
- 5	AN7-33A	BOLT 32151 THRU 50661	4	
- 6	MS20253-5-100 **	PIN	4	
	MS20253-5-112 #	PIN FLOATPLANE & AMPHIBIAN ONLY	4	
- 7	627773	NUT-BARREL CM	1	
		---*---		
- 8	0751001-1	MOUNT-ENGINE	1	
	0751001-23	MOUNT-ENGINE FLOATPLANE & AMPHIBIAN ONLY	1	
- 9		EXHAUST STACK INSTALLATION---- SEE FIGURE 83	NP	
- 10		BAFFLE INSTALLATION-ENGINE---- SEE FIGURES 79 & 80	NP	
- 11	0500106-164	TUBE-BREATHER LINE FORWARD	1	
- 12	0500106-100	TUBE-BREATHER LINE REAR	1	
		ATTACHING PARTS		
- 13	S-51-12	HOSE-3.00 IN. LG. BULK ITEM REF S-51-12-12	2	
		CESSNA STANDARD		
- 14	A3122-18-1	CLAMP TIN	4	
- 15	0750100-5	STRAP-BREATHER LINE	1	
	A2981A-12	CLAMP TIN	1	
	S-1021Z-8-8	SCREW CESSNA STANDARD	1	
		---*---		
- 16	0500106-163	TUBE-OIL DRAIN LINE	1	
		ATTACHING PARTS		
- 17	0750109	VALVE-OIL DRAIN	1	
- 18	0750110	PLUG-OIL VALVE	1	
- 19	0750108	GASKET-OIL VALVE	1	
- 20	AN900-12	GASKET-OIL PLUG	1	
- 21	AN776-8D	ELBOW	1	
- 22	0750100-17	STRAP-OIL DRAIN	1	
	A2981S-8-24	CLAMP TIN	1	
	AN742-8	CLAMP	1	
	S-1021Z-8-8	SCREW CESSNA STANDARD	1	
		---*---		
- 23	0750101-3	GOVERNOR-PROPELLER WGV 210105 SEE FIGURE 128A	1	
- 24	0311018-11	THERMOCOUPLE-ENGINE	1	
		ATTACHING PARTS		
	AN515B6-5	SCREW	2	
	AN936A6B	WASHER	2	
		---*---		
	S-292-18	SLEEVE-INSULATION CESSNA STANDARD	1	K
	S-1046-13-3.00	SLEEVE-INSULATION CESSNA STANDARD	2	L
- 25	0750126-21	AIR BOX ASSEMBLY-CARBURETOR	1	
		ATTACHING PARTS		
- 26	AN7443	BOLT	4	
- 27	0750100-6	WASHER-CARBURETOR AIR BOX	4	
		---*---		
	0750126-9	VALVE ASSEMBLY	1	
- 28	0750126-13	SEAL	1	
- 29	0750126-5	SHAFT VALVE	1	
- 30	0750111-19	ARM ASSEMBLY	1	
- 31	MS16562-16	ROLL PIN EN	1	
- 32	0750126-6	BRACKET ASSEMBLY	3	
- 33	0750126-17	BRACKET ASSEMBLY	1	
- 34	0750113-3	HOUSING ASSEMBLY	2	
- 35	0750126-20	DOUBLER-AIR BOX	1	
- 36	0750142-1	GASKET-CARBURETOR AIR BOX	1	C
- 37	0750123-1	SUPPORT-CARBURETOR AIR BOX	1	
		ATTACHING PARTS		
- 38	AN520-10R8	SCREW	1	
		---*---		

CONTINUED ON PAGES 206, 207, & 208

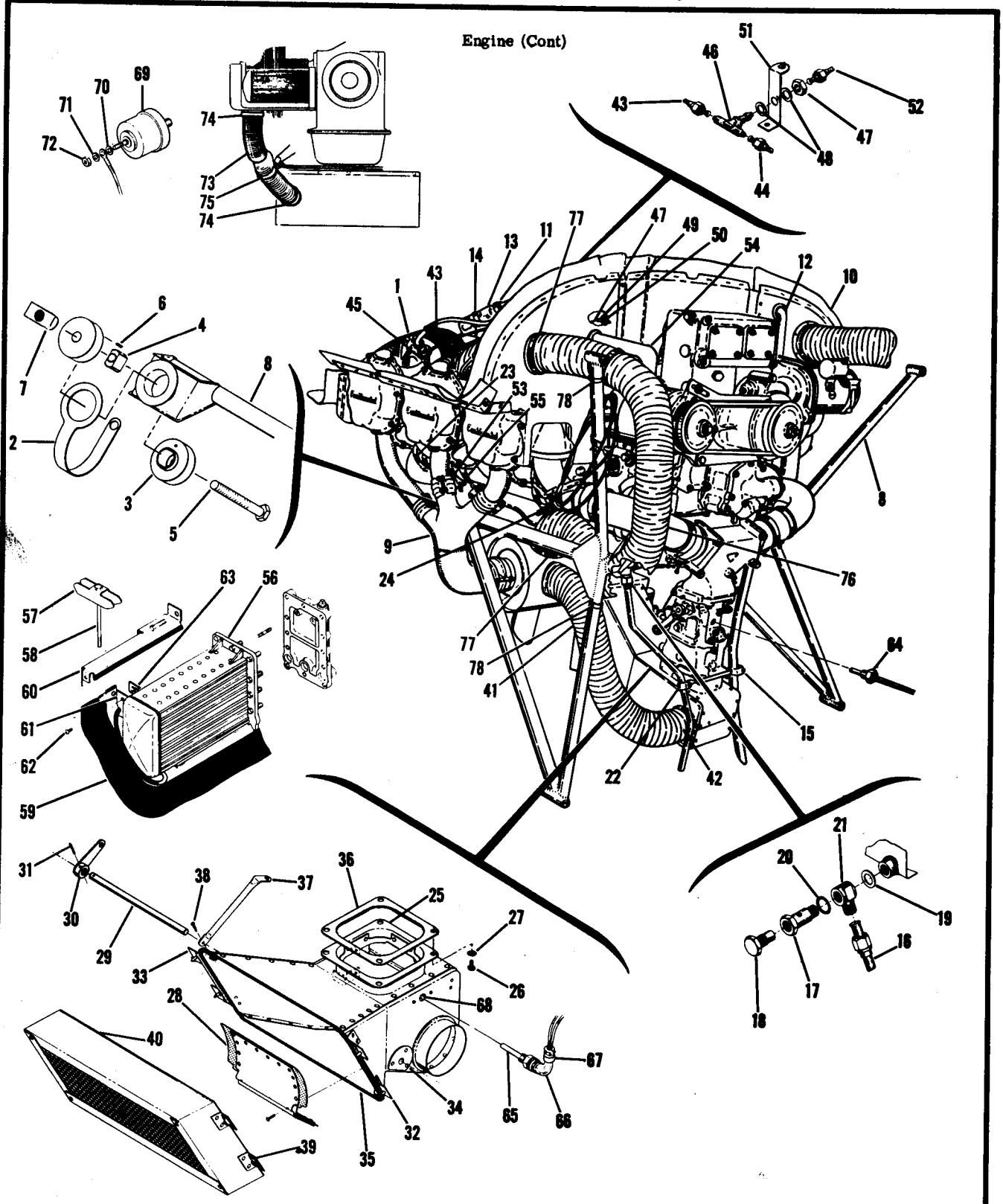

180 SERIAL 32151 THRU 50661

Figure 76. Engine Assembly

FIGURE AND INDEX NO.	PART NUMBER	DESCRIPTION 1 2 3 4 5 6 7	UNITS PER ASSY	USABLE ON CODE
76- 39	99871C.098	NUT ALIC	2	
- 40	0750127	FILTER-AIR BOX	1	
	0750127-2	GASKET-FILTER	1	
- 41	S-1053K20T	HOSE-CARBURETOR HEAT 20 IN. LONG BULK ITEM	2	
		REF S-1053K20T20.0 CESSNA STANDARD		
		ATTACHING PARTS		
- 42	A3122-42-1	CLAMP TIN	1	
		---*---		
- 43	0500106-196	PRIMER LINE-CYLINDER #6 TO TEE	1	
- 44	0500106-197	PRIMER LINE-CYLINDER #4 TO TEE	1	
		ATTACHING PARTS		
- 45	AN4022-1	NIPPLE	2	
- 46	AN834-2D	TEE	1	
- 47	AN924-2D	NUT	1	
- 48	AN960D516	WASHER	2	
- 49	AN832-2D	UNION	1	
- 50	AN924-2D	NUT	1	
- 51	0750150-1	BRACKET-PRIMER LINE	2	
	MS21919DG10	CLAMP	1	
	MS21919DG8	CLAMP	1	
		ATTACHING PARTS		
	S-1021Z-10-8	SCREW CESSNA STANDARD	1	
	NAS446-5-3	NUT TIN A1779-10Z-3	1	
		---*---		
- 52	0500100-170	PRIMER LINE-TEE TO BAFFLE	1	
- 53	0750121	DEFLECTOR ASSEMBLY	1	
- 54	0750140-6	BLAST TUBE-GENERATOR	1	D
		ATTACHING PARTS		
	A3122-16-1	CLAMP TIN	1	
		---*---		
- 55	0750141-1	DEFLECTOR-EXHAUST HEAT	2	E
		ATTACHING PARTS		
	A2982A-14-27	CLAMP TIN	2	
	S-1021Z-10-8	SCREW CESSNA STANDARD	2	
		---*---		
		LARGE OIL COOLER INSTALLATION	NP	
- 56	EQ5491S	OIL COOLER KIT-----CM	1	
- 57	0750117-31	SUPPORT-OIL COOLER	1	
- 58	AN3-60A	BOLT	1	
- 59	0700309-1	BAFFLE ASSEMBLY-OIL COOLER	1	
- 60	0700309-2	BAFFLE ASSEMBLY-OIL COOLER	1	
- 61	0700309-3	BRACKET-OIL COOLER	1	
- 62	S-1021Z-6-6	SCREW CESSNA STANDARD	2	
- 63	NAS446-2-3	NUT TIN A1181-6Z-3	2	
		FUEL PRIMER SIX LINE SYSTEM INSTALLATION-----SEE FIGURE 102	NP	
		CARBURETOR AIR TEMPERATURE GAGE INSTALLATION DETAILS-ENGINE COMPARTMENT	NP	
- 64	0550209-1	PROBE	1	N
- 65	AN5525-1	BULB	1	H
- 66	MS3108-12S-3S	PLUG	1	H
- 67	MS3057-4A	ADAPTER	1	H
- 68	0411849 *	PLATE-NUT	1	H
- 69	0726109-1	TRANSMITTER-OIL PRESSURE	1	J
	AN912-3	BUSHING	1	J
- 70	400050	WASHER SW	1	
- 71	64460	WASHER SW	1	
- 72	64459	NUT SW	1	
- 73	S-1053K24T	HOSE-AIR INTAKE 19 IN. LONG BULK ITEM	1	M
		REF S-1053K24T19.0 CESSNA STANDARD		
	S-1053K24T	HOSE-AIR INTAKE 23 IN. LONG BULK ITEM	1	B
		REF S-1053K24T23.0 CESSNA STANDARD		
		ATTACHING PARTS		
- 74	NAS398-50	CLAMP TIN A3122-50-1	2	L
- 75	AN742D50	CLAMP	1	B
	AN742D12	CLAMP	1	B
	AN3-4A	BOLT	1	B
	MS20365-1032C	NUT	1	B
		---*---		

CONTINUED ON PAGE 208

FIGURE AND INDEX NO.	PART NUMBER	DESCRIPTION 1 2 3 4 5 6 7	UNITS PER ASSY	USABLE ON CODE
76- 76	S-1053K20T	HOSE-AIR INTAKE 50 IN. LONG BULK ITEM---------- REF S-1053K20T50.0 CESSNA STANDARD ATTACHING PARTS	1	L
- 77	NAS398-42	CLAMP TIN A3122-42-1 ----------	2	L
- 78	TA732D42	CLAMP THAS ----------	2	L
	A2981A-16-27	CLAMP TIN ----------	1	L
	A2982A-14-27	CLAMP TIN ----------	1	L
	S-1021Z-8-8	SCREW CESSNA STANDARD ----------	2	L
		---*---		
		A---180 SERIAL 32151 THRU 50661 B---180 SERIAL 50404 THRU 50661 C---180 SERIAL 50166 THRU 50661 D---180 SERIAL 50155 THRU 50661 E---180 SERIAL 32942 THRU 50661 F---180 SERIAL 30000 THRU 32661 & 50220 THRU 50661 G---180 SERIAL 32662 THRU 50219 H---180 SERIAL 50190 THRU 50469 J---180 SERIAL 32662 THRU 50661 K---180 SERIAL 32151 THRU 50355 L---180 SERIAL 50356 THRU 50661 M---180 SERIAL 50356 THRU 50403 N---180 SERIAL 50470 & ON *NOTE. INSTALL PER AK180-12 INSTRUCTIONS NOTE. FOR ACCESSORY KIT LISTINGS REFER TO PAGES 372 THRU 374B NOTE. ** WHEN REPLACING THIS ITEM FOR FLOATPLANES & AMPHIBIANS ORDER PART MARKED #		

FIGURE AND INDEX NO.	PART NUMBER	DESCRIPTION 1 2 3 4 5 6 7	UNITS PER ASSY	USABLE ON CODE
77-		ENGINE ASSEMBLY-CONTINENTAL	NP	A
- 1	0-470-L	ENGINE-----CM WHEN EXHAUSTED USE 0-470-R	1	
	0-470-R	ENGINE-----CM	1	
		ATTACHING PARTS		
- 2	0750137	BONDING STRAP-ENGINE MOUNT	4	
- 3	0750132-1	SHOCK MOUNT ASSEMBLY-ENGINE	4	
- 4	0750132-2	SPACER-BONDED	1	
- 5	MS20253-5-100 **	PIN	4	
	MS20253-5-112 #	PIN FLOATPLANE & AMPHIBIAN ONLY	4	T
- 6	AN7-33A	BOLT	4	
- 7	627773	NUT-BARREL CM	4	
	AN960-716L	WASHER	4	
		---*---		
- 8	0751001-13	MOUNT-ENGINE	1	
	0751001-25	MOUNT-ENGINE FLOATPLANE & AMPHIBIAN ONLY	1	T
- 9		STACK INSTALLATION-EXHAUST---- SEE FIGURE 83	NP	
		VACUUM SYSTEM COMPONENTS-FORWARD OF FIREWALL SEE FIGURES 93, 94, & 95	NP	
- 10		BAFFLE INSTALLATION-ENGINE---- SEE FIGURE 80	NP	
- 11	0500106-164	TUBE-BREATHER LINE FORWARD	1	
- 12	0500106-250	TUBE-BREATHER LINE REAR	1	
		ATTACHING PARTS		
- 13	S-51-12	HOSE-3.00 IN. LG. BULK ITEM REF S-51-12-12 CESSNA STANDARD	2	
- 14	NAS397-18-1	CLAMP TIN A3122-18-1	4	
- 15	0750158-1	STRAP	1	
	A2981A-12-27	CLAMP TIN	1	
	S-1021Z-10-10	SCREW CESSNA STANDARD	1	
		---*---		
- 16		DELETED-NEVER USED		
- 17	0750109	VALVE-OIL DRAIN	1	S
- 18	0750110	PLUG-OIL VALVE	1	S
- 19	0750108	GASKET-OIL VALVE	1	S
- 20	AN900-12	GASKET-OIL PLUG	1	S
- 21	AN776-8D	ELBOW	1	S
- 22		DELETED-NEVER USED		
- 23	0750101-3	GOVERNOR-PROPELLER SEE FIGURE 128A	1	
- 24	0311018-11	THERMOCOUPLE-ENGINE	1	
		ATTACHING PARTS		
	AN515B6-5	SCREW	2	
	AN936A6B	WASHER	2	
		---*---		
- 25	0750133-1	AIRBOX ASSEMBLY-CARBURETOR	1	B
	0750133-18	AIRBOX ASSEMBLY-CARBURETOR	1	C
	0750144-1	AIRBOX ASSEMBLY-CARBURETOR	1	J
		ATTACHING PARTS		
- 26	AN74A3	BOLT	4	
- 27	0750100-6	WASHER	4	
		---*---		
- 28	0750133-7	VALVE ASSEMBLY	1	
- 29	0750133-8	SHAFT-VALVE	1	
	0750133-21	SHAFT-VALVE ALTERNATE	1	
- 30	0750111-19	ARM ASSEMBLY	1	
- 31	MS16562-16	ROLL PIN EN	1	
- 32	0750133-9	BRACKET ASSEMBLY	2	
- 33	0750113-1	HOUSING ASSEMBLY	2	
- 34	0750156-1	STRAP	1	
- 35	0750126-4	COLLAR	1	
- 36	0750133-16	CLIP	1	B
	0750133-17	CLIP	2	C
- 37	0750133-15	ANGLE	1	H
- 38	99967-C-.098	NUT ALIC	2	
- 39	0750133-22	DUST BAFFLE	1	
- 40	0750133-23	SEAL	1	
-40A	WL98293-3-320	STUD-----ALIC	2	J
-40B	99785-2	PIN ALIC	2	J
	AN960-10L	WASHER	2	J

CONTINUED ON PAGES 210, 211, & 212

180 SERIAL 50662 & ON
182 ALL SERIALS

Engine (Cont)

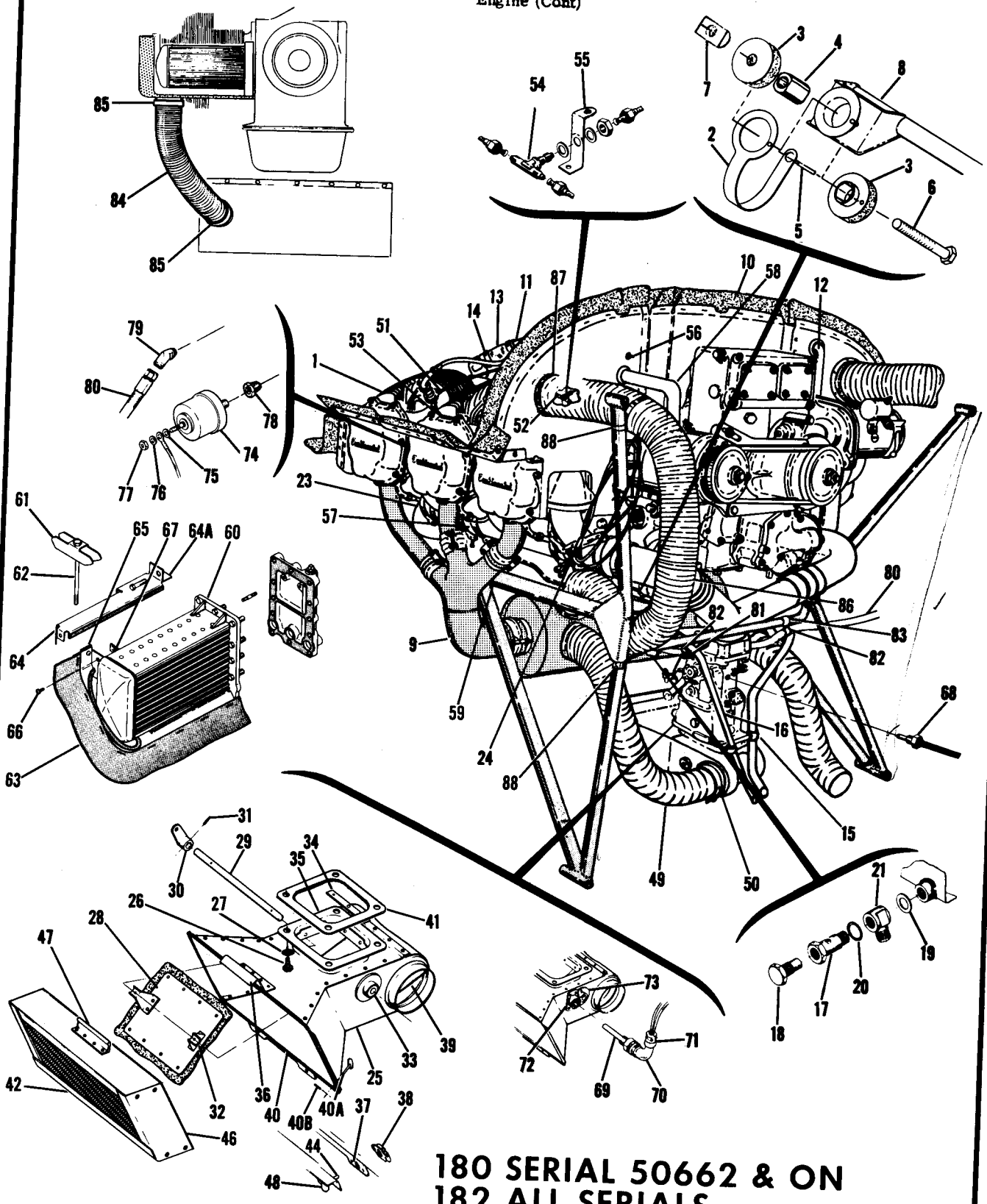

Figure 77. Engine Assembly

FIGURE AND INDEX NO.	PART NUMBER	DESCRIPTION 1 2 3 4 5 6 7	UNITS PER ASSY	USABLE ON CODE
77- 41	0750142-1	GASKET-CARBURETOR AIRBOX	1	G
- 42	0750127-12	FILTER ASSEMBLY-CARBURETOR	1	B
	0750127-14	FILTER ASSEMBLY-CARBURETOR	1	C
- 43		DELETED NOT PROCURABLE		
- 44	WL98293-2-240	STUD-----ALIC	2	H
- 45		DELETED NOT PROCURABLE		
	99785-2	PIN ALIC	2	
- 46	0750127-2	GASKET-FILTER	1	H
	0750127-15	GASKET-FILTER	1	
- 47	0750127-5	ANGLE-FILTER TOP	1	B
	0750127-13	ANGLE-FILTER TOP	1	C
- 48	0750127-4	ANGLE-FILTER TOP	1	H
- 49	S-1053K20T	HOSE-CARBURETOR HEAT 17.5 IN. LONG BULK ITEM ----- REF S-1053K20T17.50 CESSNA STANDARD	1	
		ATTACHING PARTS		
- 50	NAS398-42-1	CLAMP TIN A3122-42-1	1	
		---*---		
- 51	0500106-196	PRIMER LINE-CYLINDER #6 TO TEE	1	
- 52	0500106-197	PRIMER LINE-CYLINDER #4 TO TEE	1	
		ATTACHING PARTS		
- 53	AN4022-1	NIPPLE	2	
- 54	AN834-2D	TEE	1	
	AN924-2D	NUT	1	
	AN960D516	WASHER	2	
- 55	0750150-1	BRACKET-PRIMER LINE	2	
		---*---		
	MS21919DG8	CLAMP-IGNITION HARNESS FORWARD	1	
	MS21919DG10	CLAMP-IGNITION HARNESS REAR	1	
		ATTACHING PARTS		
	S-1021Z-10-8	SCREW CESSNA STANDARD	1	
	NAS446-5-3	NUT TIN A1779-10Z-3	1	
		---*---		
- 56	0500106-170	PRIMER LINE-TEE TO BAFFLE	1	
- 57	0750121	DEFLECTOR ASSEMBLY	6	
		FUEL PRIMER SIX LINE SYSTEM INSTALLATION-----SEE FIGURE 102	1	D
		FUEL PRIMER FIVE LINE SYSTEM INSTALLATION SEE FIGURE 102	1	E
- 58	0750140-6	BLAST TUBE-GENERATOR	1	F
		ATTACHING PARTS		
	NAS397-16-1	CLAMP TIN A3122-16-1	1	
		---*---		
- 59	0750283-1	DEFLECTOR-EXHAUST HEAT	2	K
		ATTACHING PARTS		
	A2982A-14-27	CLAMP TIN	2	
	S-1021Z-10-10	SCREW CESSNA STANDARD	2	
		---*---		
- 60	EQ5491S	LARGE OIL COOLER INSTALLATION	NP	
- 61	0750117-31	OIL COOLER CM	1	
- 62	AN3-60A	SUPPORT-OIL COOLER	1	H
- 63	0700309-1	BOLT	1	H
	0700318-2	BAFFLE ASSEMBLY	1	H
- 64	0700309-2	BAFFLE ASSEMBLY	1	J
-64A	0750152-2	BAFFLE ASSEMBLY	1	
- 65	0700309-3	BAFFLE-OIL COOLER INBOARD	1	
- 66	S-1021Z-6-6	BRACKET-OIL COOLER	1	H
- 67	NAS446-2-3	SCREW CESSNA STANDARD	2	
		NUT TIN A1181-6Z-3	2	
		CARBURETOR AIR TEMPERATURE GAGE INSTALLATION	NP	
		DETAILS-ENGINE COMPARTMENT		
- 68	0550209-1	PROBE	1	M
- 69	AN5525-1	BULB	1	L
- 70	MS3108-12S-3S	PLUG	1	L
- 71	MS3057-4A	ADAPTER	1	L
- 72	0411849 *	PLATE-NUT	1	L
- 73	0750113-3	HOUSING	1	L

CONTINUED ON PAGE 212

FIGURE AND INDEX NO.	PART NUMBER	DESCRIPTION	UNITS PER ASSY	USABLE ON CODE
		1 2 3 4 5 6 7		
77- 74	0726109-1	TRANSMITTER-OIL PRESSURE	1	N
- 75	400050	WASHER SW	1	
- 76	64460	WASHER SW	1	
- 77	64459	NUT SW	1	
- 78	AN912-3	BUSHING	1	
- 79	0752037-1	ELBOW	1	R
- 80	S-1167-4-0388	HOSE-OIL PRESSURE CESSNA STANDARD	1	P
		ATTACHING PARTS	1	P
- 81	0752038-1	BRACKET		
- 82	MS21919DG9	CLAMP	1	P
- 83	A2981A-12-27	CLAMP TIN	2	P
	S-1021Z-10-10	SCREW CESSNA STANDARD	1	P
	NAS446-4-3	NUT	2	P
		---*---	1	P
- 84	S-1053K24T	HOSE-AIR INTAKE 19 IN. LONG BULK ITEM		
		REF S-1053K24T19.0 CESSNA STANDARD	1	J
- 85	NAS398-50	ATTACHING PARTS		
		CLAMP TIN A3122-50-1		
	S-1053K20T	---*---	2	J
- 86	S-1053K20T	HOSE-AIR INTAKE 39 IN. LONG BULK ITEM		
		REF S-1053K20T39.0 CESSNA STANDARD	1	Q
		HOSE-AIR INTAKE 50 IN. LONG BULK ITEM		
		REF S-1053K20T50.0 CESSNA STANDARD	1	P
- 87	NAS398-42	ATTACHING PARTS		
	TA732D42	CLAMP TIN A3122-42-1		
- 88	TA732D42	CLAMP THAS	2	J
	A3053A-16-27	CLAMP THAS	1	Q
	A2982A-14-27	CLAMP TIN	2	P
	A2981-16-27	CLAMP TIN	1	Q
	S-1021Z-8-8	CLAMP TIN	1	P
	S-1021Z-10-12	SCREW CESSNA STANDARD	1	P
		SCREW CESSNA STANDARD	1	Q
	MF-3A	---*---	2	P
		FILTER-MAGNETO LEAR	1	

A---182 SERIAL 33000 & ON
180 SERIAL 50662 & ON
B---182 SERIAL 33000 THRU 34440
C---182 SERIAL 34441 THRU 51556
D---182 SERIAL 33000 THRU 33842 & 51038 & ON
E---182 SERIAL 33843 THRU 51037
F---182 SERIAL 34782 & ON
180 SERIAL 50662 & ON
G---182 SERIAL 34850 & ON
H---182 SERIAL 33000 THRU 51556
J---182 SERIAL 51557 & ON
180 SERIAL 50662 & ON
K---182 SERIAL 34376 & ON
180 SERIAL 50662 & ON
L---182 SERIAL 33000 THRU 51901
M---182 SERIAL 51902 & ON
180 SERIAL 50662 & ON
N---182 SERIAL 33843 THRU 52358
O---182 SERIAL 51557 THRU 51901
P---182 SERIAL 52359 & ON
180 SERIAL 50662 & ON
Q---182 SERIAL 51557 THRU 52358
R---182 SERIAL 33843 & ON
180 SERIAL 50662 & ON
S---182 SERIAL 33000 THRU 52358
T---180 SERIAL 50662 & ON
*NOTE. INSTALL PER AK180-12 INSTRUCTIONS
NOTE. FOR ACCESSORY KIT LISTINGS REFER TO PAGES 372 THRU 3748
NOTE. ** WHEN REPLACING THIS ITEM FOR FLOATPLANES & AMPHIBIANS ORDER PART MARKED #

This page intentionally left blank.

FIGURE AND INDEX NO.	PART NUMBER	DESCRIPTION 1 2 3 4 5 6 7	UNITS PER ASSY	USABLE ON CODE
78-		BAFFLES INSTALLATION-ENGINE	NP	A
	SK180-1	SERVICE KIT-ENGINE BAFFLES	1	
- 1	0750117-2	BAFFLE ASSEMBLY-FRONT LH **180 SERIAL**	1	
		ATTACHING PARTS		
- 2	AN3-3A	BOLT **30000 THRU 32150**	1	
		---*---		
- 3	0750117-14	SEAL-BAFFLE	1	
- 4	0750117-23	BAFFLE ASSEMBLY-FRONT RH	1	
- 5	0750117-24	SEAL-BAFFLE	1	
- 6	0750117-46	SEAL-BAFFLE	1	
- 7	0750117-9	BAFFLE ASSEMBLY-HORIZONTAL LH	1	
- 8	0750117-12	BAFFLE ASSEMBLY-HORIZONTAL RH	1	
		ATTACHING PARTS		
- 9	AN515-8R8	SCREW	6	
- 10	MS20365-832C	NUT	6	
		---*---		
- 11	0750117-5	SEAL-BAFFLE	1	
- 12	0750117-49	BAFFLE ASSEMBLY-INNER CYLINDER FRONT	2	
		ATTACHING PARTS		
- 13	AN3-66A	BOLT	1	
		---*---		
- 14	NAS682A3	NUT NUS	1	
- 15	0750117-48	BAFFLE ASSEMBLY-INNER CYLINDER REAR	2	
		ATTACHING PARTS		
- 16	AN3-37A	BOLT	1	
		---*---		
- 17	NAS682A3	NUT NUS	1	
- 18	MS35489-20S	GROMMET	1	
- 19	0750117-28	BAFFLE ASSEMBLY-OIL COOLER REAR	1	
		ATTACHING PARTS		
- 20	AN3-3A	BOLT	1	
		---*---		
- 21	NAS682A3	NUT NUS	1	
- 22	0750117-51	BAFFLE ASSEMBLY-REAR CENTER VERTICAL	1	
- 23	0750117-21	BRACKET-MOUNTING	1	
- 24	MS35489-118	GROMMET	1	
- 25	0750117-41	SEAL-BAFFLE	1	
- 26	0750117-4	BAFFLE ASSEMBLY-REAR VERTICAL LH	1	
		ATTACHING PARTS		
- 27	S-1021Z-6-6	SCREW CESSNA STANDARD	3	
- 28	NAS446-2-3	NUT TIN A1181-6Z-3	3	
		---*---		
- 29	0750117-40	PLATE-COVER	1	
		ATTACHING PARTS		
- 30	S-1021Z-8-6	SCREW CESSNA STANDARD	1	
	NAS446-4-3	NUT TIN A1778-8Z-3	1	
		---*---		
- 31	0750117-32	BRACKET-MOUNTING	1	
- 32	0750117-20	PAN-BAFFLE	1	
- 33	0750117-40	SEAL-BAFFLE	1	
- 34	0750117-37	BAFFLE ASSEMBLY-REAR VERTICAL RH	1	
		ATTACHING PARTS		
- 35	S-1021Z-6-6	SCREW CESSNA STANDARD	3	
- 36	NAS446-2-3	NUT TIN A1181-6Z-3	3	
		---*---		
- 37	0713019-33	UNION-BAFFLE	1	
- 38	0750117-39	BRACKET-MOUNTING	1	
- 39	MS35489-20	GROMMET	1	
- 40	0750117-33	PAN-BAFFLE	1	
- 41	0750117-40	SEAL-BAFFLE	1	
- 42	0450277-1	FASTENER-REAR BAFFLE TO CYLINDER	2	
- 43	0450277-2	FASTENER-REAR BAFFLE TO CYLINDER	2	
- 44	0750117-30	SUPPORT-BAFFLE	2	
- 45	0750117-31	SUPPORT-BAFFLE	2	

CONTINUED ON PAGE 215

Engine (Cont)

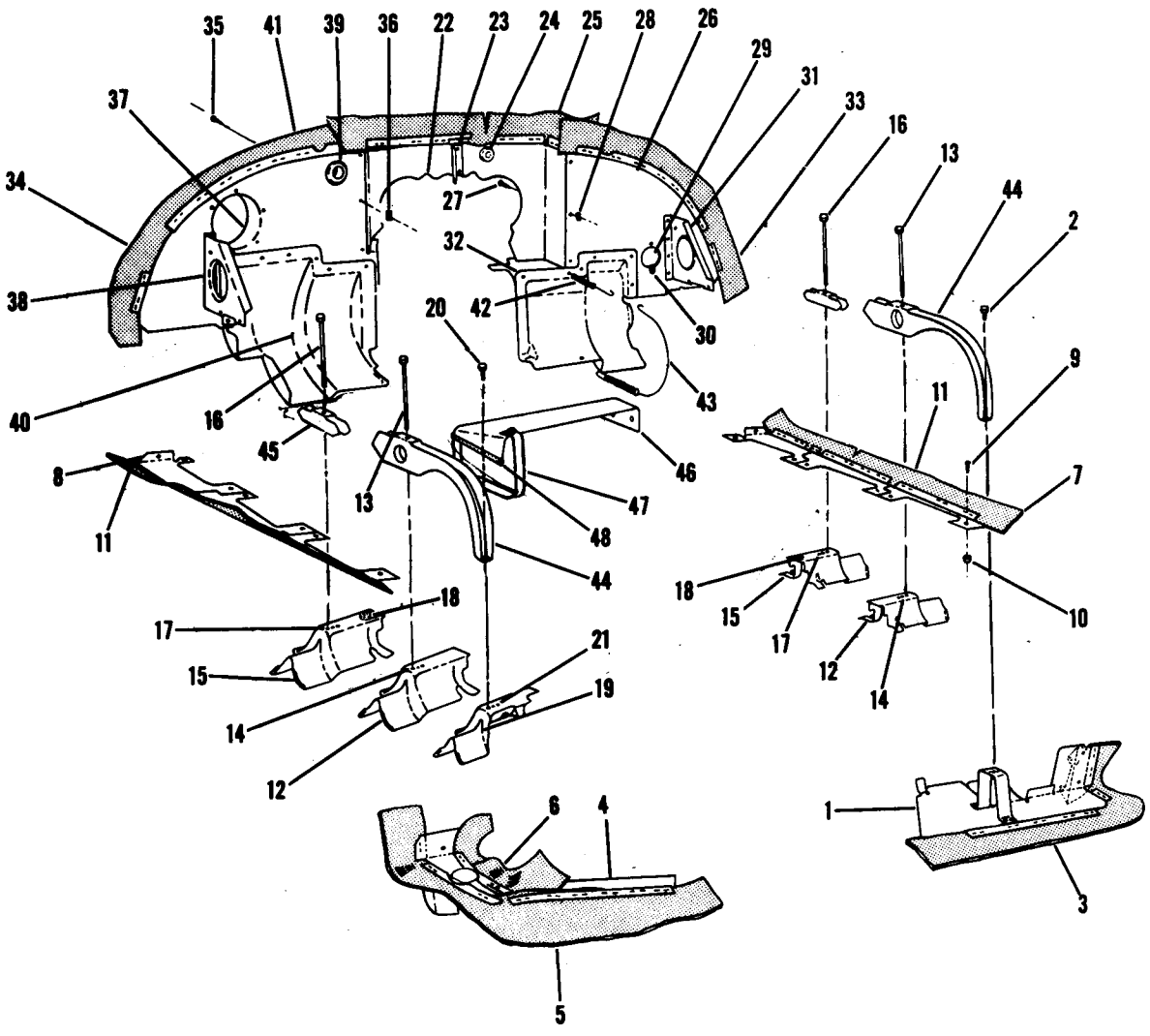

180 SERIAL 30000 THRU 32150

Figure 78. Engine Baffle Installation

FIGURE AND INDEX NO.	PART NUMBER	DESCRIPTION 1 2 3 4 5 6 7	UNITS PER ASSY	USABLE ON CODE
78- 46	0750118-4	BAFFLE ASSEMBLY-OIL COOLER FRONT	1	
- 47	0750118-3	STRAP ASSEMBLY	1	
		ATTACHING PARTS		
	S-1021Z-8-6	SCREW CESSNA STANDARD	1	
	NAS446-2-3	NUT TIN A1181-6Z-3	1	
		---*---		
- 48	S-202RB	MOLDING-RUBBER CHANNEL CESSNA STANDARD	1	
		A---180 SERIAL 30000 THRU 32150		

Engine (Cont)

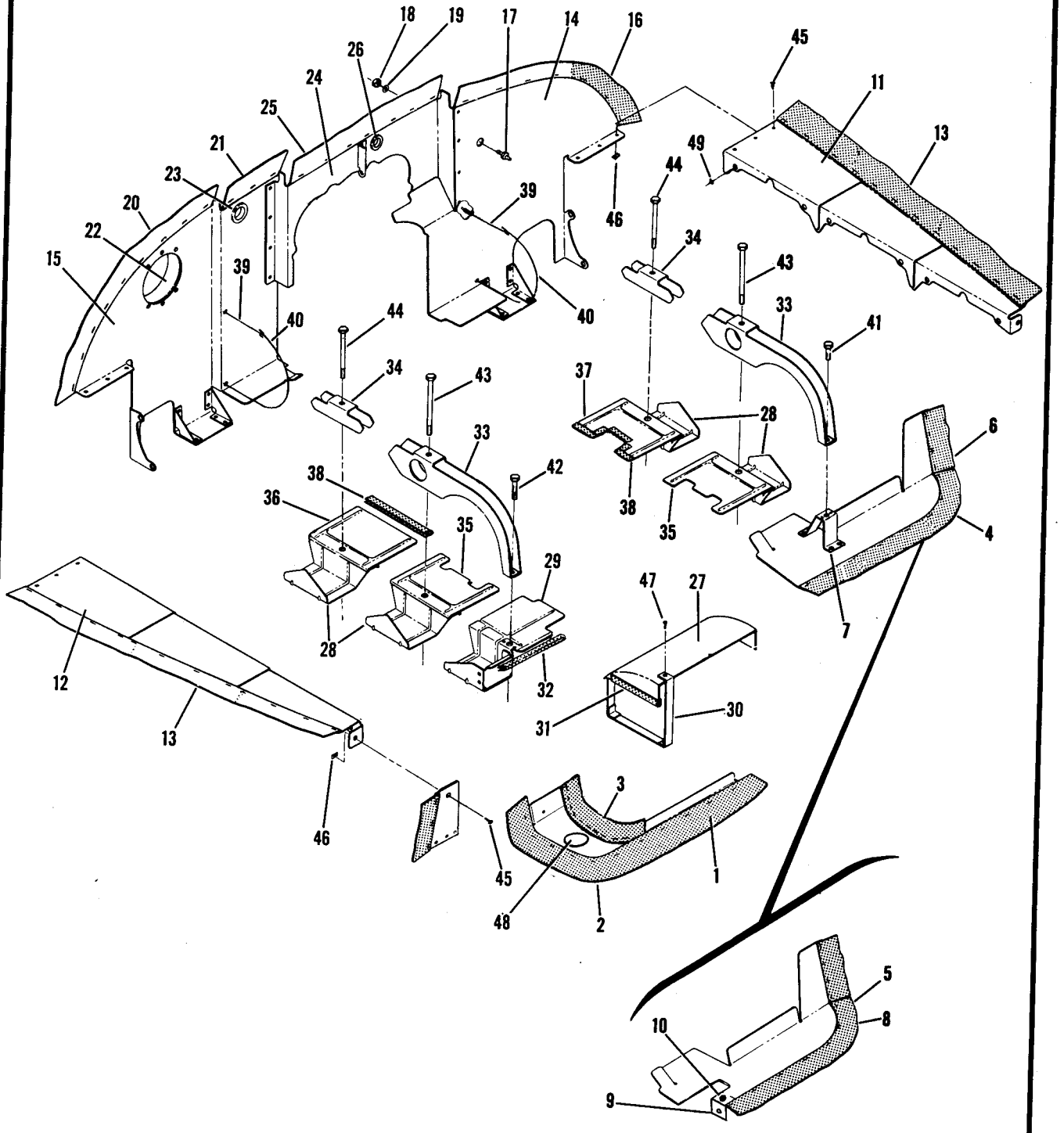

180 SERIAL 32151 THRU 50355

Figure 79. Engine Baffle Installation

FIGURE AND INDEX NO.	PART NUMBER	DESCRIPTION 1 2 3 4 5 6 7	UNITS PER ASSY	USABLE ON CODE
79-		BAFFLES INSTALLATION-ENGINE	NP	A
	SK-180-5	SERVICE KIT-ENGINE BAFFLES---180 SERIAL	1	B
	SK-180-8	SERVICE KIT-ENGINE BAFFLES---32151 THRU 50355	1	C
- 1	0750128-25	BAFFLE ASSEMBLY-FRONT RH	1	B
	0750128-40	BAFFLE ASSEMBLY-FRONT RH	1	C
- 2	0750128-26	SEAL-BAFFLE	1	
- 3	0750128-27	SEAL-BAFFLE	1	
- 4	0750128-24	BAFFLE ASSEMBLY-FRONT LH	1	B
- 5	0750128-38	BAFFLE ASSEMBLY-FRONT LH	1	C
- 6	0750128-18	SEAL-BAFFLE	1	B
- 7	0750117-29	BRACKET-BAFFLE	1	B
- 8	0750128-37	SEAL-BAFFLE	1	C
- 9	0750128-42	BRACKET-BAFFLE	1	C
		ATTACHING PARTS		
- 10	S-1021Z-6-6	SCREW CESSNA STANDARD	1	
	MAS446-2-3	NUT TIN A1181-6Z-3	1	
		---*---		
- 11	0750128-23	BAFFLE ASSEMBLY-HORIZONTAL LH	1	
- 12	0750128-19	BAFFLE ASSEMBLY-HORIZONTAL RH	1	
- 13	0750128-13	SEAL-BAFFLE	2	
- 14	0750128-22	BAFFLE ASSEMBLY-REAR VERTICAL LH	1	E
	0750128-44	BAFFLE ASSEMBLY-REAR VERTICAL LH	1	D
- 15	0750128-20	BAFFLE ASSEMBLY-REAR VERTICAL RH	1	
- 16	0750128-17	SEAL-BAFFLE	1	
- 17	AN832-2D	UNION	1	
		ATTACHING PARTS		
- 18	AN924-2D	NUT	1	
- 19	AN960D516	WASHER	2	
		---*---		
- 20	0750128-14	SEAL-BAFFLE	1	
- 21	0750128-15	SEAL-BAFFLE	1	
- 22	0713019-33	UNION-BAFFLE	1	
- 23	MS35489-20	GROMMET	1	
- 24	0750128-21	BAFFLE ASSEMBLY-REAR	1	
- 25	0750128-16	SEAL-BAFFLE	1	
- 26	MS35489-118	GROMMET	1	
- 27	0750118-4	BAFFLE ASSEMBLY-OIL COOLER	1	
- 28	0750135-1	BAFFLE ASSEMBLY-INTER-CYLINDER	4	
- 29	0750135-7	BAFFLE ASSEMBLY-OIL COOLER	1	
- 30	0750118-3	STRAP ASSEMBLY	1	
- 31	S-202RB	CHANNEL-BAFFLE---CESSNA STANDARD	AR	
- 32	S-202RB	MOULDING CESSNA STANDARD	AR	
- 33	0750117-30	SUPPORT-BAFFLE	2	B
	0750117-30	SUPPORT-BAFFLE	1	C
	0750117-31	SUPPORT-BAFFLE	2	J
- 34	0750117-31	SUPPORT-BAFFLE	3	K
- 35	0750135-3	BAFFLE	2	
- 36	0750135-8	BAFFLE	2	B
	0750135-8	BAFFLE	1	C
- 37	0750135-10	BAFFLE	1	C
- 38	S-202RB	MOULDING CESSNA STANDARD	AR	
- 39	0450277-2	FASTENER	2	
- 40	0450277-3	FASTENER	2	
- 41	AN3-5A	BOLT	1	B
- 42	AN3-24A	BOLT	1	
- 43	AN3-66A	BOLT	1	A
- 44	AN3-60A	BOLT	2	G
	AN3-60A	BOLT	3	H
- 45	S-1021Z-6-6	SCREW CESSNA STANDARD	19	
- 46	MAS446-2-3	NUT TIN A1181-6Z-3	19	
- 47	S-1021Z-8-8	SCREW CESSNA STANDARD	2	
	MAS446-4-3	NUT TIN A1778-8Z-3	1	
- 48	51058	PLUG BUTTON---UC	1	B
- 49	AN960D416	WASHER	32	

A---180 SERIAL 32151 THRU 50355
B---180 SERIAL 32151 THRU 32661
C---180 SERIAL 32662 THRU 50355
D---180 SERIAL 50155 THRU 50355
E---180 SERIAL 32151 THRU 50154
G---180 SERIAL 32151 THRU 32803
H---180 SERIAL 32804 THRU 50355
J---180 SERIAL 32151 THRU 50338
K---180 SERIAL 50339 THRU 50355

Engine (Cont)

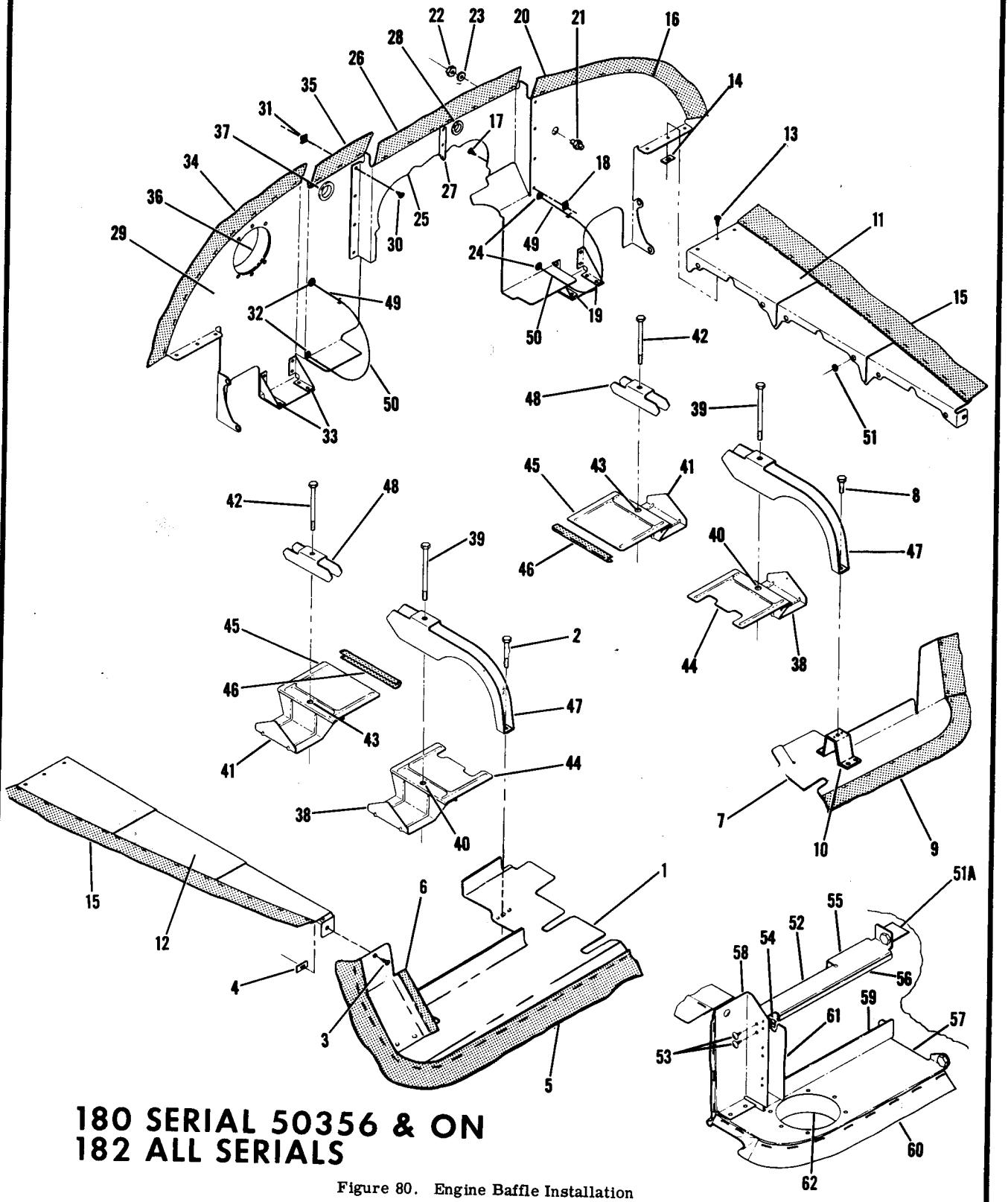

180 SERIAL 50356 & ON
182 ALL SERIALS

Figure 80. Engine Baffle Installation

FIGURE AND INDEX NO.	PART NUMBER	DESCRIPTION 1 2 3 4 5 6 7	UNITS PER ASSY	USABLE ON CODE
80-		BAFFLES INSTALLATION-ENGINE	NP	A
- 1	0750128-35	BAFFLE ASSEMBLY-FRONT RH	1	L
		ATTACHING PARTS		
- 2	AN3-24A	BOLT	1	
- 3	S-1021Z-6-6	SCREW CESSNA STANDARD	1	
- 4	NAS446-2-3	NUT TIN A1181-6Z-3	1	
		---*---		
- 5	0750128-32	SEAL-BAFFLE	1	
- 6	0750128-33	SEAL-BAFFLE	1	
	NAS680A3	NUTPLATE	1	
- 7	0750128-38	BAFFLE ASSEMBLY-FRONT LH	1	
		ATTACHING PARTS		
- 8	AN3-5A	BOLT	1	
	S-1021Z-6-6	SCREW CESSNA STANDARD	1	
	NAS446-2-3	NUT TIN A1181-6Z-3	1	
		---*---		
- 9	0750128-37	SEAL-BAFFLE	1	
- 10	0750128-42	BRACKET ASSEMBLY	1	
	NAS680A3	NUTPLATE	1	
- 11	0750128-23	BAFFLE ASSEMBLY-HORIZONTAL LH	1	
- 12	0750128-19	BAFFLE ASSEMBLY-HORIZONTAL RH	1	
		ATTACHING PARTS		
- 13	S-1021Z-6-6	SCREW CESSNA STANDARD	3	
- 14	NAS446-2-3	NUT TIN A1181-6Z-3	3	
		---*---		
- 15	0750128-13	SEAL-BAFFLE	2	
- 16	0750128-22	BAFFLE ASSEMBLY-VERTICAL LH	1	D
	0750128-44	BAFFLE ASSEMBLY-VERTICAL LH	1	C
	0750128-50	BAFFLE ASSEMBLY-VERTICAL LH	1	G
		ATTACHING PARTS		
- 17	S-1021Z-6-6	SCREW CESSNA STANDARD	4	
- 18	NAS446-2-3	NUT TIN A1181-6Z-3	4	
		---*---		
- 19	0750128-11	GUSSET-BAFFLE	2	
- 20	0750128-17	SEAL-BAFFLE	1	
- 21	AN832-2D	UNION-BAFFLE	1	
		ATTACHING PARTS		
- 22	AN924-2D	NUT	1	
- 23	AN960D516	WASHER	1	
- 24	MS20230B20	GROMMET	2	
		---*---		
- 25	0750128-21	BAFFLE ASSEMBLY-REAR	1	
- 26	0750128-16	SEAL-BAFFLE	1	
- 27	0750117-21	BRACKET-BAFFLE	1	
- 28	MS35489-118	GROMMET	1	
- 29	0750128-20	BAFFLE ASSEMBLY-VERTICAL RH	1	M
	0750128-53	BAFFLE ASSEMBLY-VERTICAL RH	1	N
		ATTACHING PARTS		
- 30	S-1021Z-6-6	SCREW CESSNA STANDARD	4	
- 31	NAS446-2-3	NUT TIN A1181-6Z-3	4	
- 32	MS20230B20	GROMMET	2	
		---*---		
- 33	0750128-11	GUSSET-BAFFLE	2	
- 34	0750128-14	SEAL-BAFFLE	1	
- 35	0750128-15	SEAL-BAFFLE	1	
- 36	0713019-33	UNION-BAFFLE	1	M
- 37	MS35489-20	GROMMET	1	
- 38	0750135-1	BAFFLE ASSEMBLY-INNER CYLINDER FORWARD	2	
		ATTACHING PARTS		
- 39	AN3-66A	BOLT	1	L
	AN3-67A	BOLT	1	G
		---*---		
- 40	NAS680A3	NUTPLATE	1	
- 41	0750135-1	BAFFLE ASSEMBLY-INNER CYLINDER REAR	2	
		ATTACHING PARTS		
- 42	AN3-60A	BOLT	1	
		---*---		
- 43	NAS680A3	NUTPLATE	1	
- 44	0750135-3	BAFFLE-INNER CYLINDER	2	
- 45	0750135-8	BAFFLE ASSEMBLY	2	E
	0750135-8	BAFFLE ASSEMBLY	1	F
	0750135-10	BAFFLE ASSEMBLY	1	G
- 46	0750135-11	SEAL-BAFFLE	1	

180 SERIAL 50356 & ON

182 ALL SERIALS

CONTINUED ON PAGE 220

FIGURE AND INDEX NO.	PART NUMBER	DESCRIPTION 1 2 3 4 5 6 7	UNITS PER ASSY	USABLE ON CODE
80- 47	0750117-30	SUPPORT-BAFFLE FRONT	2	H
	0750117-30	SUPPORT-BAFFLE FRONT	1	J
	0851700-96	SUPPORT-BAFFLE FRONT LH ONLY	1	P
	0851700-96	SUPPORT-BAFFLE FRONT	2	G
- 48	0750117-31	SUPPORT-BAFFLE REAR	3	L
	0750117-31	SUPPORT-BAFFLE REAR	2	G
- 49	0450277-3	FASTENER-REAR BAFFLE TO CYLINDER UPPER	2	
- 50	0450277-2	FASTENER-REAR BAFFLE TO CYLINDER LOWER	2	
- 51	AN960D416	WASHER	32	
-51A	0750152-1	BAFFLE-OIL COOLER INBOARD	1	G
- 52	0750148-2	BAFFLE ASSEMBLY-OIL COOLER	1	G
		ATTACHING PARTS		
- 53	S-1021Z-6-6	SCREW CESSNA STANDARD	2	
- 54	NAS446-2-3	NUT TIN A1181-6Z-3	2	
		---*---		
- 55	0750148-1	BAFFLE-OIL COOLER	1	
- 56	S-202RB	CHANNEL-BAFFLE-----CESSNA STANDARD	AR	
- 57	0750149-1	BAFFLE ASSEMBLY-OIL COOLER	1	G
- 58	0750149-2	BAFFLE-VERTICAL	1	
- 59	0750149-3	BAFFLE-HORIZONTAL	1	
- 60	0750149-4	SEAL-HORIZONTAL BAFFLE	1	
- 61	0750149-5	SEAL-VERTICAL BAFFLE		
- 62	0713019-33	UNION-BAFFLE		

A---182 SERIAL 33000 & ON
180 SERIAL 50356 & ON
C---182 SERIAL 34782 THRU 51556
D---182 SERIAL 33000 THRU 34781
E---182 SERIAL 33000 THRU 33482
F---180 SERIAL 50356 & ON
182 SERIAL 33483 & ON
G---180 SERIAL 50356 & ON
182 SERIAL 51557 & ON
H---182 SERIAL 33000 THRU 34136
J---182 SERIAL 34137 THRU 51556
L---182 SERIAL 33000 THRU 51556
M---180 SERIAL 50356 THRU 50911
182 SERIAL 33000 THRU 53007
N---180 SERIAL 18050912 & ON
182 SERIAL 18253008 & ON
P---180 SERIAL 32804 THRU 50355
182 SERIAL 34137 THRU 51556

FIGURE AND INDEX NO.	PART NUMBER	DESCRIPTION 1 2 3 4 5 6 7	UNITS PER ASSY	USABLE ON CODE
81-		WINTERIZATION EQUIPMENT INSTALLATION	NP	A
		WINTERIZATION INSTALLATION-SMALL OIL COOLER	NP	B
		WINTERIZATION INSTALLATION-LARGE OIL COOLER	NP	B
		WINTERIZATION INSTALLATION-SMALL OIL COOLER	NP	C
		WINTERIZATION INSTALLATION-LARGE OIL COOLER	NP	C
		WINTERIZATION INSTALLATION-SMALL OIL COOLER	NP	D
		WINTERIZATION INSTALLATION-LARGE OIL COOLER	NP	D
		WINTERIZATION INSTALLATION-SMALL OIL COOLER	NP	E
		WINTERIZATION INSTALLATION-LARGE OIL COOLER	NP	E
		WINTERIZATION INSTALLATION---- NON-MECHANICAL-----SMALL & LARGE OIL COOLER	NP	K
- 1	0700313-35	PLATE-COWL LEFT INBOARD COVER	1	F
- 2	0700313-36	PLATE-COWL LEFT OUTBOARD COVER	1	F
- 3	0700313-5	PLATE-COWL LEFT INBOARD COVER	1	G
- 4	0700313-7	PLATE-COWL LEFT OUTBOARD COVER	1	G
		ATTACHING PARTS		
- 5	0700313-37	CLIP-UPPER	2	F
- 6	0700313-38	CLIP-LOWER	2	F
- 7	0700313-20	CLIP-UPPER	2	G
- 8	0700313-29	CLIP-LOWER	2	G
- 9	S-1021Z-8-7	SCREW CESSNA STANDARD	4	
- 10	NAS395-16-3	NUT TIN A1789-8Z-3	4	
		---*---		
- 11	0411090-22	CONTROL ASSEMBLY REF 0411090-22	1	L
	0713302-5	CONTROL ASSEMBLY REF 0713302-5	1	M
- 12	0756001-4	SUPPORT	1	N
		ATTACHING PARTS		
- 13	S-1021Z-8-6	SCREW CESSNA STANDARD	2	
- 14	NAS446-4-3	NUT TIN A1778-8Z-3	2	
		---*---		
- 15	0700313-49	PLACARD-REMOVAL INSTRUCTIONS	1	N
- 16	0753000-13	DOUBLER	1	N
- 17	0700313-25	COVER-BALANCE TUBE	1	
- 18	0700313-40	COVER-CARBURETOR AIR BOX	1	B
	0700313-4	COVER-CARBURETOR AIR BOX	1	J
		ATTACHING PARTS		
- 19	S-1021Z-8-7	SCREW CESSNA STANDARD	4	
	NAS395-16-3	NUT TIN A1789-8Z-3	4	
		---*---		
- 20	0700311	SHUTTER ASSEMBLY USED WITH SMALL OIL COOLER	1	H
- 21	0450311	CLAMP	1	
- 22	MS20365-1032C	NUT	1	
- 23	AN960-10	WASHER	2	
- 24	0700313-3	BOX ASSEMBLY-SHUTTER USED WITH SMALL OIL COOLER	1	E
		ATTACHING PARTS		
- 25	AN3-4A	BOLT	2	
- 26	MS20365-1032C	NUT	2	
		---*---		
- 27	0700313-9	LINK-SHUTTER	2	
		ATTACHING PARTS		
- 28	MS20392-1-7	PIN-FLATHEAD	3	
- 29	MS24665-130	PIN-COTTER	3	
		---*---		
- 30	0700313-11	SHUTTER ASSEMBLY	4	
- 31	0700313-24	PIN	4	
- 32	0450311-5	CLAMP	1	
		ATTACHING PARTS		
- 33	AN960-4	WASHER	1	
- 34	MS20365-1032C	NUT	1	
		---*---		
- 35	A2981A-3-27	CLAMP TIN	1	
		ATTACHING PARTS		
- 36	S-1021Z-8-7	SCREW CESSNA STANDARD	1	
- 37	NAS446-4-3	NUT TIN A1778-8Z-3	1	
		---*---		

CONTINUED ON PAGES 222 & 223

180 SERIAL 30000 THRU 50661
182 SERIAL 33000 THRU 51556

Engine (Cont)

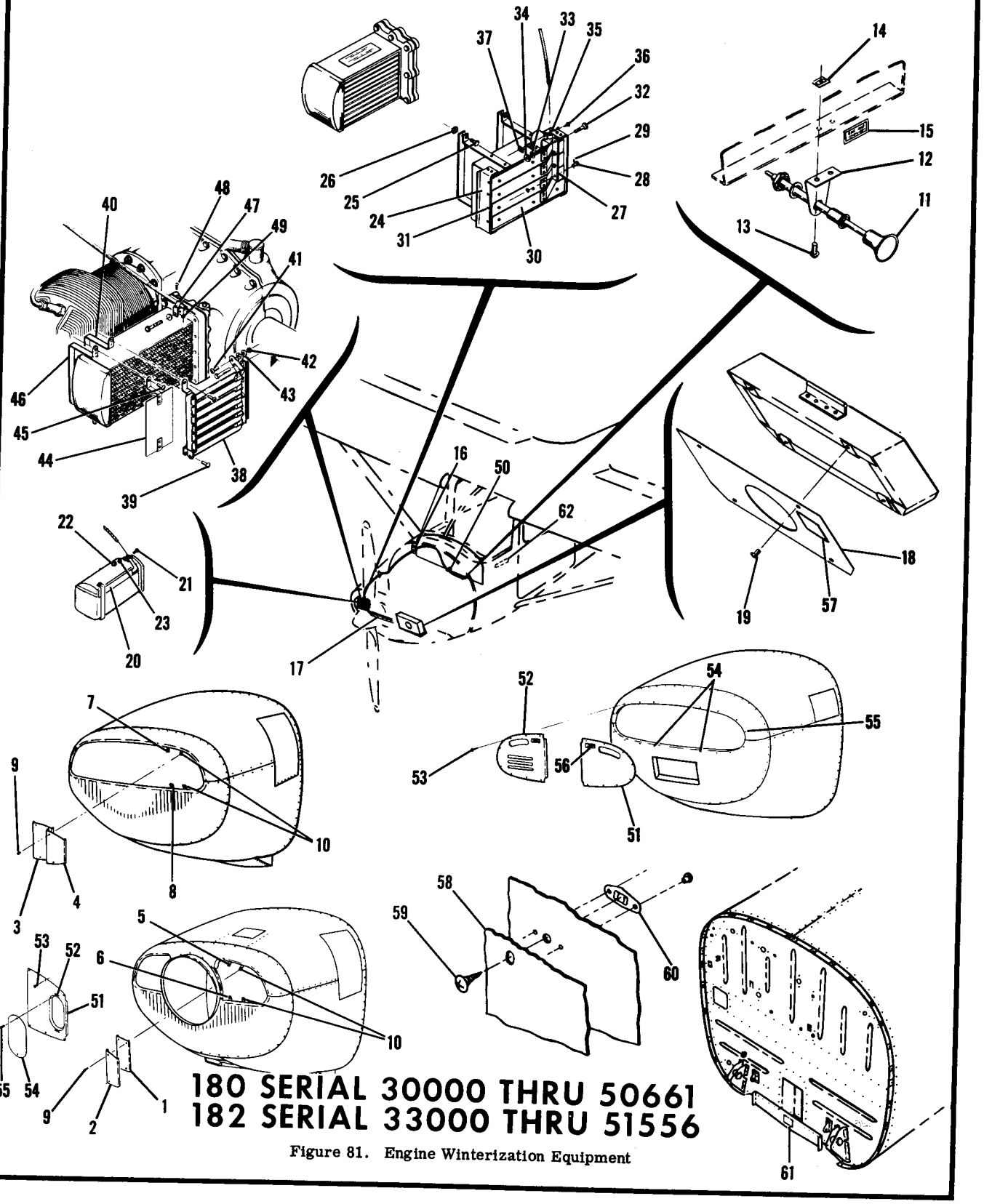

Figure 81. Engine Winterization Equipment

FIGURE AND INDEX NO.	PART NUMBER	DESCRIPTION 1 2 3 4 5 6 7	UNITS PER ASSY	USABLE ON CODE
81- 38	0700313-44	BOX ASSEMBLY-SHUTTER USED WITH LARGE OIL COOLER ----	1	N
		ATTACHING PARTS		
- 39	AN515-8R8	SCREW ----------	2	
		---*---		
- 40	0850007-4	STRAP ASSEMBLY ----------	1	
- 41	0450311-5	CLAMP ----------	1	
		ATTACHING PARTS		
- 42	MS20365-1032C	NUT ----------	1	
- 43	AN960-416L	WASHER ----------	2	
		---*---		
- 44	0700313-45	COVER ASSEMBLY-----USED WITH LARGE OIL COOLER ---------	1	N
		ATTACHING PARTS		
- 45	AN515-8R8	SCREW ----------	2	
- 46	0850006-1	STRAP ASSEMBLY----------	1	
		---*---		
- 47	AN742-3	CLAMP USED WITH LARGE OIL COOLER ----------	1	N
		ATTACHING PARTS		
- 48	S-1021Z-8-6	SCREW CESSNA STANDARD ----------	1	
- 49	NAS446-4-3	NUT TIN A1778-8Z-3 ----------	1	
		---*---		
- 50	49160	CLAMP UC USED WITH LARGE OIL COOLER----------	1	N
- 51	0700319-3	COVER-COWL OPENING LH USED WITH BOTH SMALL & LARGE	1	K
		OIL COOLER		
- 52	0700319-2	COVER-COWL OPENING RH USED WITH BOTH SMALL & LARGE	1	K
		OIL COOLER		
		ATTACHING PARTS		
- 53	AN525-832R8	SCREW ----------	8	
- 54	A8K120	RIVNUT GD ----------	1	
- 55	A8K75	RIVNUT GD ----------	7	
		---*---		
- 56	0700319-12	PLACARD-REMOVAL INSTRUCTIONS----------	2	K
- 57	0700319-12	PLACARD-REMOVAL INSTRUCTIONS----------	1	
		SHIELD INSTALLATION-WINTERIZATION ----------	NP	
- 58	0750105-1	SHIELD ----------	1	
		ATTACHING PARTS		
- 59	S1021Z-8-8	SCREW CESSNA STANDARD ----------	4	
- 60	NAS444-4	NUT TIN A6191-8Z-3 ----------	4	
		---*---		
- 61	0552102	PLACARD-REMOVAL INSTRUCTIONS----------	1	
- 62	0700319-13	PLACARD-WINTERIZATION INFORMATION ----------	1	

A---180 SERIAL 30000 THRU 50661
182 SERIAL 33000 THRU 51556
B---180 SERIAL 30000 THRU 32150
C---180 SERIAL 32151 THRU 32661
D---180 SERIAL 32662 THRU 50338
E---180 SERIAL 50339 THRU 50497
F---180 SERIAL 30000 THRU 32661
G---180 SERIAL 32662 THRU 50497
H---180 SERIAL 30000 THRU 50338
J---180 SERIAL 32151 THRU 50661 & ALL 182 AIRPLANES SERIAL 33000 THRU 51556 THAT HAVE BEEN RETROFITTED TO THE NON-MECHANICAL CONFIGURATION.
K---180 SERIAL 50498 THRU 50661 & ALL 180 AIRPLANES SERIAL 32662 THRU 50497 & ALL 182 AIRPLANES SERIAL 33000 THRU 51556 THAT HAVE BEEN RETROFITTED TO THE NON-MECHANICAL CONFIGURATION.
L---180 SERIAL 30000 THRU 50355
M---180 SERIAL 50356 THRU 50497
N---180 SERIAL 30000 THRU 50497
NOTE. FOR ACCESSORY KIT LISTINGS REFER TO PAGES 372 THRU 374B

Engine (Cont)

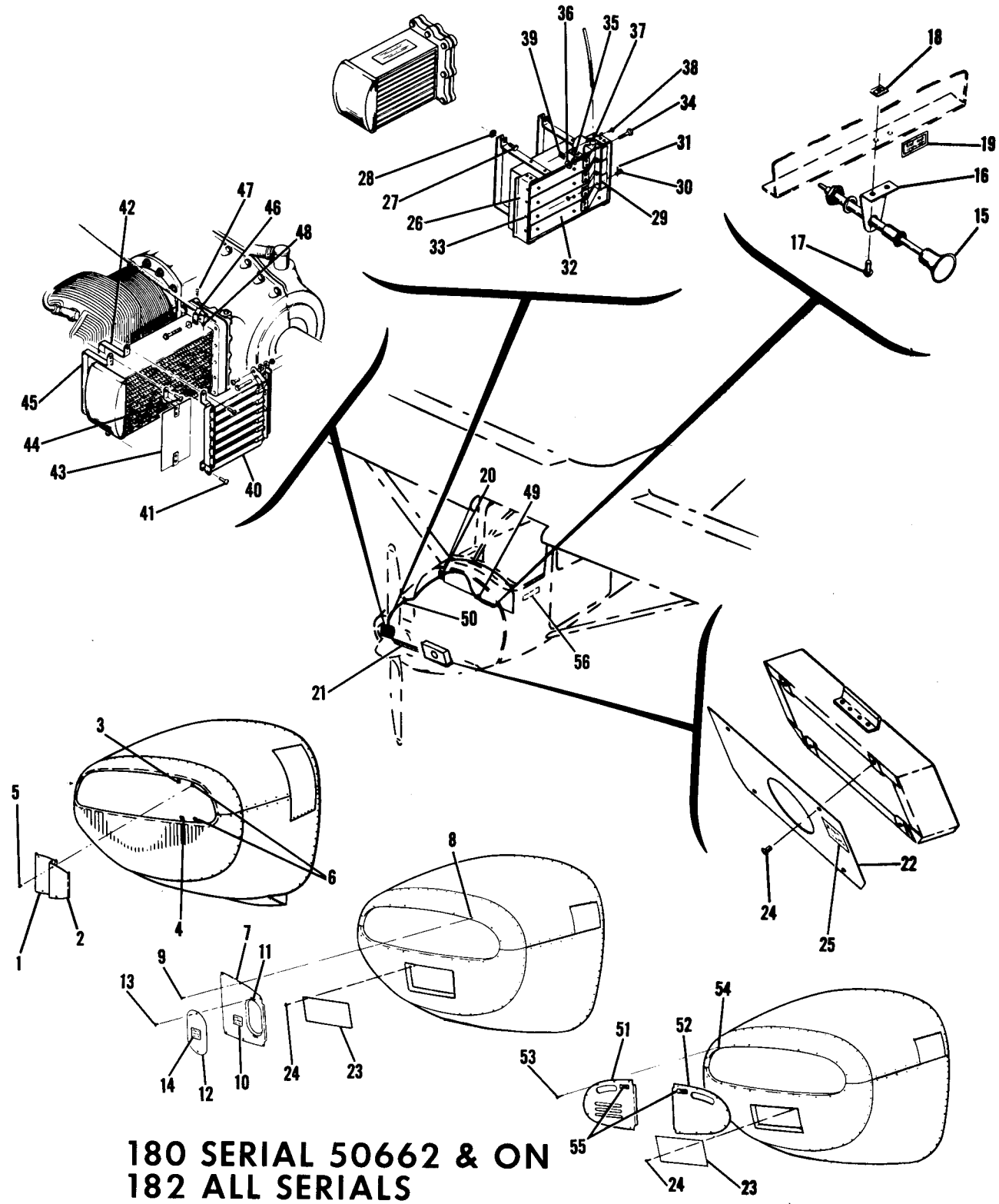

Figure 81A. Engine Winterization Equipment

FIGURE AND INDEX NO.	PART NUMBER	DESCRIPTION 1 2 3 4 5 6 7	UNITS PER ASSY	USABLE ON CODE
81A-		WINTERIZATION EQUIPMENT INSTALLATION	NP	A
		WINTERIZATION INSTALLATION-SMALL OIL COOLER	NP	B
		WINTERIZATION INSTALLATION-LARGE OIL COOLER	NP	B
		WINTERIZATION INSTALLATION-SMALL OIL COOLER	NP	C
		WINTERIZATION INSTALLATION-LARGE OIL COOLER	NP	C
		WINTERIZATION INSTALLATION---- NON MECHANICAL-----USED WITH BOTH SMALL & LARGE OIL COOLERS	NP	D
- 1	0700313-5	PLATE-COWL LEFT INBOARD COVER	1	B
- 2	0700313-7	PLATE-COWL LEFT OUTBOARD COVER	1	B
		ATTACHING PARTS		
- 3	0700313-20	CLIP-UPPER	2	
- 4	0700313-29	CLIP-LOWER	2	
- 5	S-1021Z-8-6	SCREW CESSNA STANDARD	4	
- 6	NAS395-16-3	NUT TIN A1789-8Z-3	4	
		---*---		
- 7	0700313-62	PLATE ASSEMBLY	1	C
		ATTACHING PARTS		
- 8	NAS680A08	NUTPLATE	6	
- 9	AN515-8R8	SCREW	6	
		---*---		
- 10	0552103	PLACARD-REMOVAL INSTRUCTIONS	1	
- 11	NAS680A08	NUTPLATE	2	
- 12	0700313-58	PLATE-COOLER	1	C
		ATTACHING PARTS		
- 13	AN515-8R8	SCREW	2	
		---*---		
- 14	0552103	PLACARD-REMOVAL INSTRUCTIONS	1	C
- 15	0411090-22	CONTROL ASSEMBLY REF 0411090-22	1	B
	0713302-5	CONTROL ASSEMBLY REF 0713302-5	1	C
- 16	0756001-4	SUPPORT	1	E
		ATTACHING PARTS		
- 17	S-1021Z-8-6	SCREW CESSNA STANDARDS	2	
- 18	NAS446-1-3	NUT TIN A1778-8Z-3	2	
		---*---		
- 19	0700313-49	PLACARD-REMOVAL INSTRUCTIONS	1	E
- 20	0753000-13	DOUBLER	1	E
- 21	0700313-25	COVER-BALANCE TUBE	1	
- 22	0700313-4	COVER-CARBURETOR BOX	1	B
- 23	0700313-59	COVER-CARBURETOR BOX	1	F
		ATTACHING PARTS		
- 24	S-1021Z-8-7	SCREW CESSNA STANDARD	4	
	NAS395-12-3	NUT TIN A1786-8Z-3	4	
		---*---		
- 25	0700319-12	PLACARD-REMOVAL INSTRUCTIONS	1	
- 26	0700313-3	BOX ASSEMBLY-SHUTTER USED WITH SMALL OIL COOLER	1	E
		ATTACHING PARTS		
- 27	AN3-4A	BOLT	2	
- 28	MS20365-1032C	NUT	2	
		---*---		
- 29	0700313-9	LINK-SHUTTER	2	
		ATTACHING PARTS		
- 30	MS20392-1-7	PIN-FLATHEAD	3	
- 31	MS24665-130	PIN-COTTER	3	
		---*---		
- 32	0700313-11	SHUTTER ASSEMBLY	4	
- 33	0700313-24	PIN	4	
- 34	0450311-5	CLAMP	1	
		ATTACHING PARTS		
- 35	AN960-4	WASHER	1	
- 36	MS20365-1032C	NUT	1	
		---*---		
- 37	A2981A-3-27	CLAMP TIN	1	
		ATTACHING PARTS		
- 38	S-1021Z-8-7	SCREW CESSNA STANDARD	1	
- 39	NAS446-4-3	NUT TIN A1778-8Z-3	1	
		---*---		

CONTINUED ON PAGE 226

180 SERIAL 50662 & ON
182 ALL SERIALS

FIGURE AND INDEX NO.	PART NUMBER	DESCRIPTION 1 2 3 4 5 6 7	UNITS PER ASSY	USABLE ON CODE
81A- 40	0700313-44	BOX ASSEMBLY-SHUTTER USED WITH LARGE OIL COOLER ----	1	E
		ATTACHING PARTS		
- 41	AN515-8R8	SCREW ----------	2	
		---*---		
- 42	0850007-4	STRAP ASSEMBLY ----------	1	
- 43	0700313-45	COVER ASSEMBLY-----USED WITH LARGE OIL COOLER ----------	1	E
		ATTACHING PARTS		
- 44	AN515-8R8	SCREW ----------	2	
- 45	0850006-1	STRAP ASSEMBLY----------	1	
		---*---		
- 46	AN842-3	CLAMP USED WITH LARGE OIL COOLER ----------	1	E
		ATTACHING PARTS		
- 47	S-1021Z-8-6	SCREW CESSNA STANDARD ----------	1	
- 48	NAS446-4-3	NUT TIN A1778-8Z-3 ----------	1	
		---*---		
- 49	49160	CLAMP UC USED WITH LARGE OIL COOLER----------	1	E
- 50	A2981A-3-27	CLAMP TIN USED WITH LARGE OIL COOLER ----------	1	E
		ATTACHING PARTS		
	S-1021Z-8-7	SCREW CESSNA STANDARD ----------	1	
	NAS446-4-3	NUT TIN A1778-8Z-3 ----------	1	
		---*---		
- 51	0700319-6	COVER-COWL OPENING RH ----------	1	D
- 52	0700319-5	COVER-COWL OPENING LH ----------	1	D
		ATTACHING PARTS		
- 53	AN525-832R8	SCREW ----------	8	
- 54	A8K75	RIVNUT GD ----------	8	
		---*---		
- 55	0700319-12	PLACARD-REMOVAL INSTRUCTIONS----------	2	D
- 56	0700319-13	PLACARD-WINTERIZATION INFORMATION ----------	1	
		A---180 SERIAL 50662 & ON		
		182 SERIAL 33000 & ON		
		FOR RETROFIT INSTALLATION & ITS SUPPORT, SERIAL 33000		
		THRU 51556 SEE FIGURE 81.		
		B---182 SERIAL 33000 THRU 51556		
		C---182 SERIAL 51557 THRU 52011		
		D---182 SERIAL 52012 & ON & ALL 182 AIRPLANES SERIAL 51557		
		THRU 52011 THAT HAVE BEEN RETROFITTED TO THE NON-		
		MECHANICAL CONFIGURATION.		
		180 SERIAL 50662 & ON		
		E---182 SERIAL 33000 THRU 52011		
		F---182 SERIAL 51557 & ON		
		180 SERIAL 50662 & ON		
		NOTE. FOR ACCESSORY KIT LISTINGS REFER TO		
		PAGES 372 THRU 374B		

FIGURE AND INDEX NO.	PART NUMBER	DESCRIPTION 1 2 3 4 5 6 7	UNITS PER ASSY	USABLE ON CODE
82-	0750290-27	STACK ASSEMBLY-ENGINE EXHAUST LH----- ---	1	A
	0750290-28	STACK ASSEMBLY-ENGINE EXHAUST RH----- ---	1	A
- 1	0750290-3	MUFFLER ASSEMBLY-EXHAUST --------- ---	1	
- 2	0750290-19	SHROUD-EXHAUST MUFFLER LH -------- ---	1	
	0750290-20	SHROUD-EXHAUST MUFFLER RH -------- ---	1	
		ATTACHING PARTS		
- 3	AN525-832-8	SCREW ----------	4	
- 4	NAS395-11-3	NUT TIN----------	4	
		---*---		
		CONTINUED ON PAGE 227		

180 SERIAL 30000 THRU 32150

Engine (Cont)

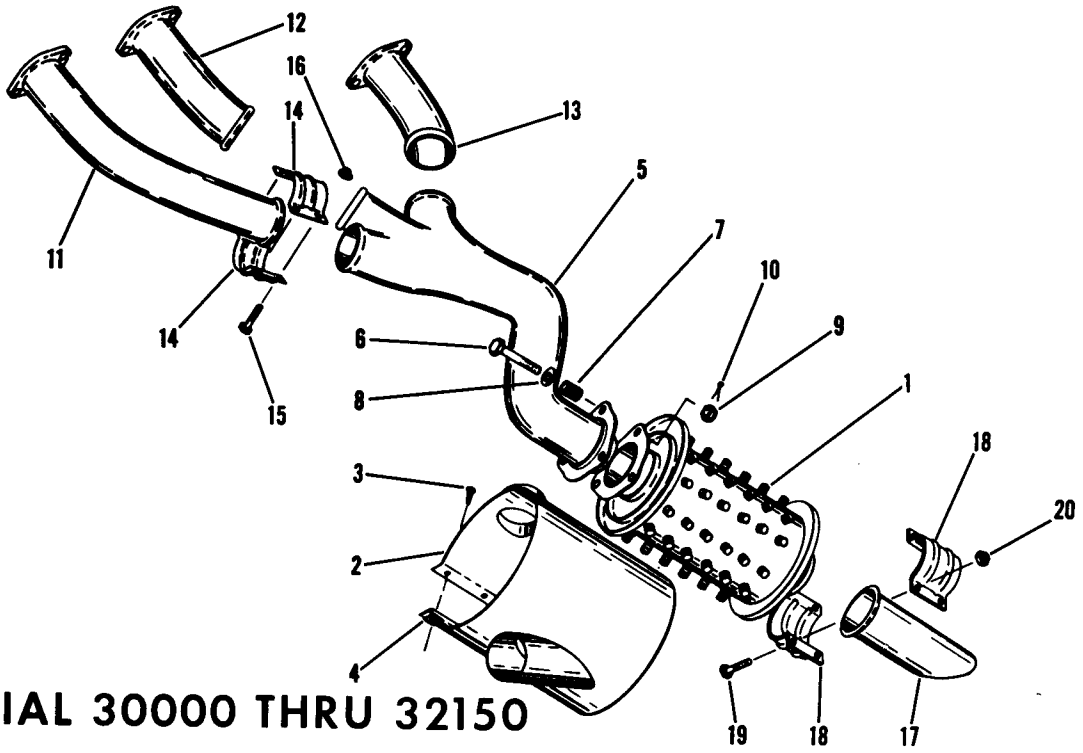

180 SERIAL 30000 THRU 32150

Figure 82. Engine Exhaust Stack Assembly

FIGURE AND INDEX NO.	PART NUMBER	DESCRIPTION 1 2 3 4 5 6 7	UNITS PER ASSY	USABLE ON CODE
82- 5	0750290-23	COLLECTOR ASSEMBLY-ENGINE EXHAUST LH	1	
	0750290-24	COLLECTOR ASSEMBLY-ENGINE EXHAUST RH	1	
		ATTACHING PARTS		
- 6	AN3-12	BOLT	3	
- 7	0750290-10	SPRING-COLLECTOR	3	
- 8	AN960-10	WASHER	3	
- 9	AN310-3	NUT	3	
- 10	MS24665-134	PIN-COTTER	3	
		---*---		
- 11	0750290-6	TUBE EXHAUST-FORWARD	1	
- 12	0750290-7	TUBE EXHAUST-CENTER	1	
- 13	0750290-8	TUBE EXHAUST-REAR	1	
		ATTACHING PARTS		
- 14	0750290-9	CLAMP-EXHAUST	2	
- 15	AN4-4A	BOLT	4	
- 16	MS20365-1032C	NUT	4	
		---*---		
- 17	0750290-25	TAILPIPE-LH	1	
	0750290-26	TAILPIPE-RH	1	
		ATTACHING PARTS		
- 18	0750290-14	CLAMP-EXHAUST	2	
- 19	AN3-4A	BOLT	4	
- 20	MS20365-1032C	NUT	4	
		---*---		
		A---180 SERIAL 30000 THRU 32150		

Engine (Cont)

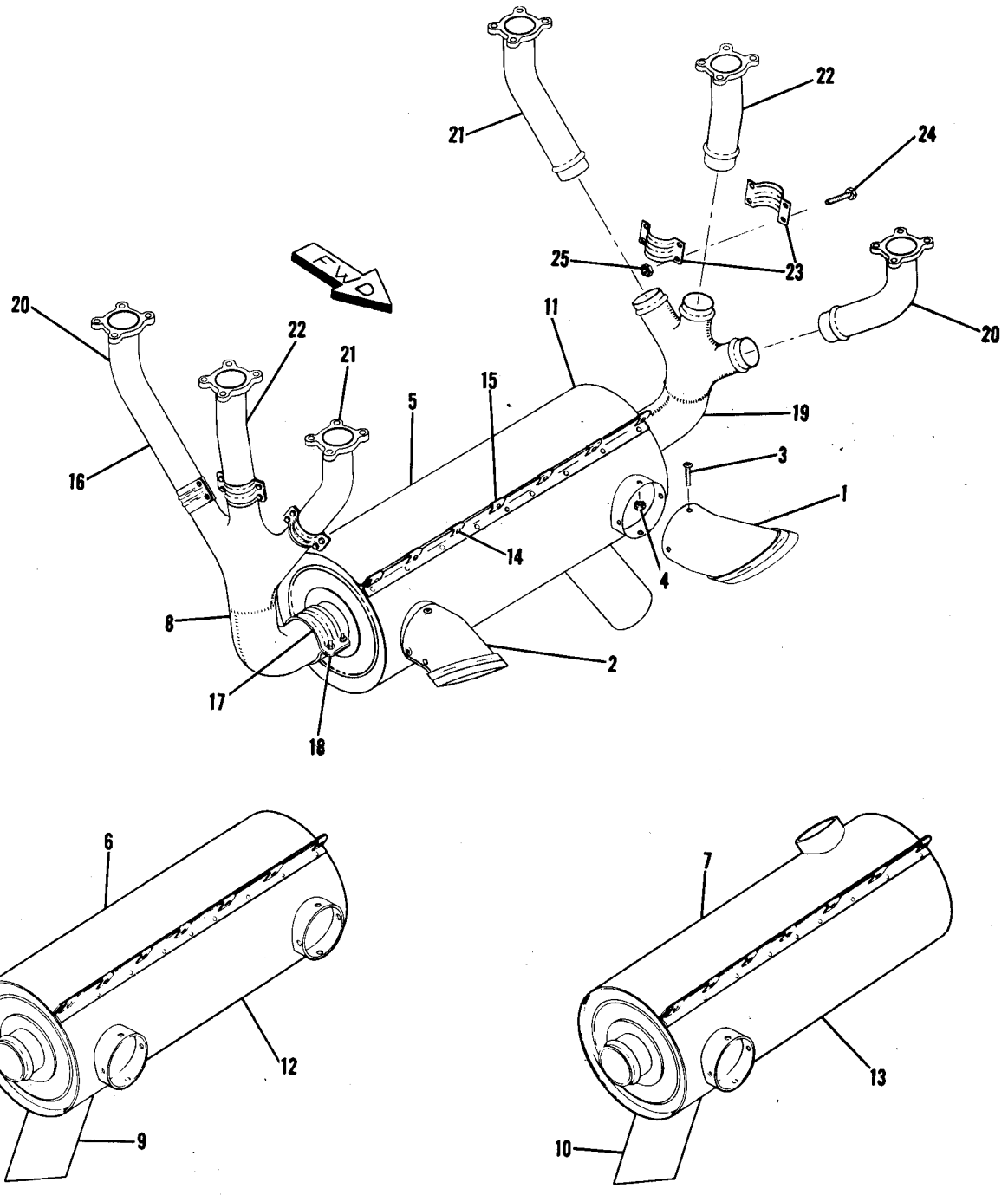

180 SERIAL 32151 & ON
182 ALL SERIALS

Figure 83. Engine Exhaust Stack

FIGURE AND INDEX NO.	PART NUMBER	DESCRIPTION 1 2 3 4 5 6 7	UNITS PER ASSY	USABLE ON CODE
83-		EXHAUST STACK INSTALLATION	NP	A
- 1	0750129-1	TUBE ASSEMBLY-COLD AIR INTAKE LH	1	B
- 2	0750129-2	TUBE ASSEMBLY-COLD AIR INTAKE RH	1	B
		ATTACHING PARTS		
- 3	AN520-10R5	SCREW	4	
- 4	MS20365-1032C	NUT	4	
		---*---		
- 5	0750130-10	STACK ASSEMBLY-EXHAUST	1	E
- 6	0750130-14	STACK ASSEMBLY-EXHAUST	1	D
- 7	0750130-43	STACK ASSEMBLY-EXHAUST	1	C
- 8	0750130-9	MUFFLER ASSEMBLY	1	E
- 9	0750130-12	MUFFLER ASSEMBLY	1	D
- 10	0750130-44	MUFFLER ASSEMBLY	1	C
- 11	0750130-11	SHROUD ASSEMBLY	1	E
- 12	0750130-13	SHROUD ASSEMBLY	1	D
- 13	0750130-46	SHROUD ASSEMBLY	1	C
		ATTACHING PARTS		
- 14	S-1021Z-8-8	SCREW CESSNA STANDARD	7	
- 15	NAS446-4-3	NUTPLATE TIN A1778-8Z-3	7	
		---*---		
- 16	0750130-6	COLLECTOR ASSEMBLY	2	
		ATTACHING PARTS		
- 17	0750130-42	CLAMP ASSEMBLY	2	
- 18	AN3-4A	BOLT	4	
	MS20365-1032C	NUT	4	
		---*---		
- 19	0750130-48	COLLECTOR-EXHAUST	1	
- 20	0750130-3	TUBE ASSEMBLY-REAR	1	
- 21	0750130-4	TUBE ASSEMBLY-FORWARD	1	
- 22	0750130-5	TUBE ASSEMBLY-CENTER	1	
		ATTACHING PARTS		
- 23	0750130-31	CLAMP-TUBE	2	
- 24	AN3-4A	BOLT	4	
- 25	MS20365-1032C	NUT	4	
		---*---		

182 ALL SERIALS

180 SERIAL 32151 & ON

A---180 SERIAL 32151 & ON
182 SERIAL 33000 & ON
B---180 SERIAL 32151 THRU 50355
182 SERIAL 33000 THRU 51556
C---180 SERIAL 50356 & ON
182 SERIAL 51557 & ON
D---180 SERIAL 50106 THRU 50355
182 SERIAL 34754 THRU 51556
E---180 SERIAL 32151 THRU 50105
182 SERIAL 33000 THRU 34753

Cabin Air Vent Installation

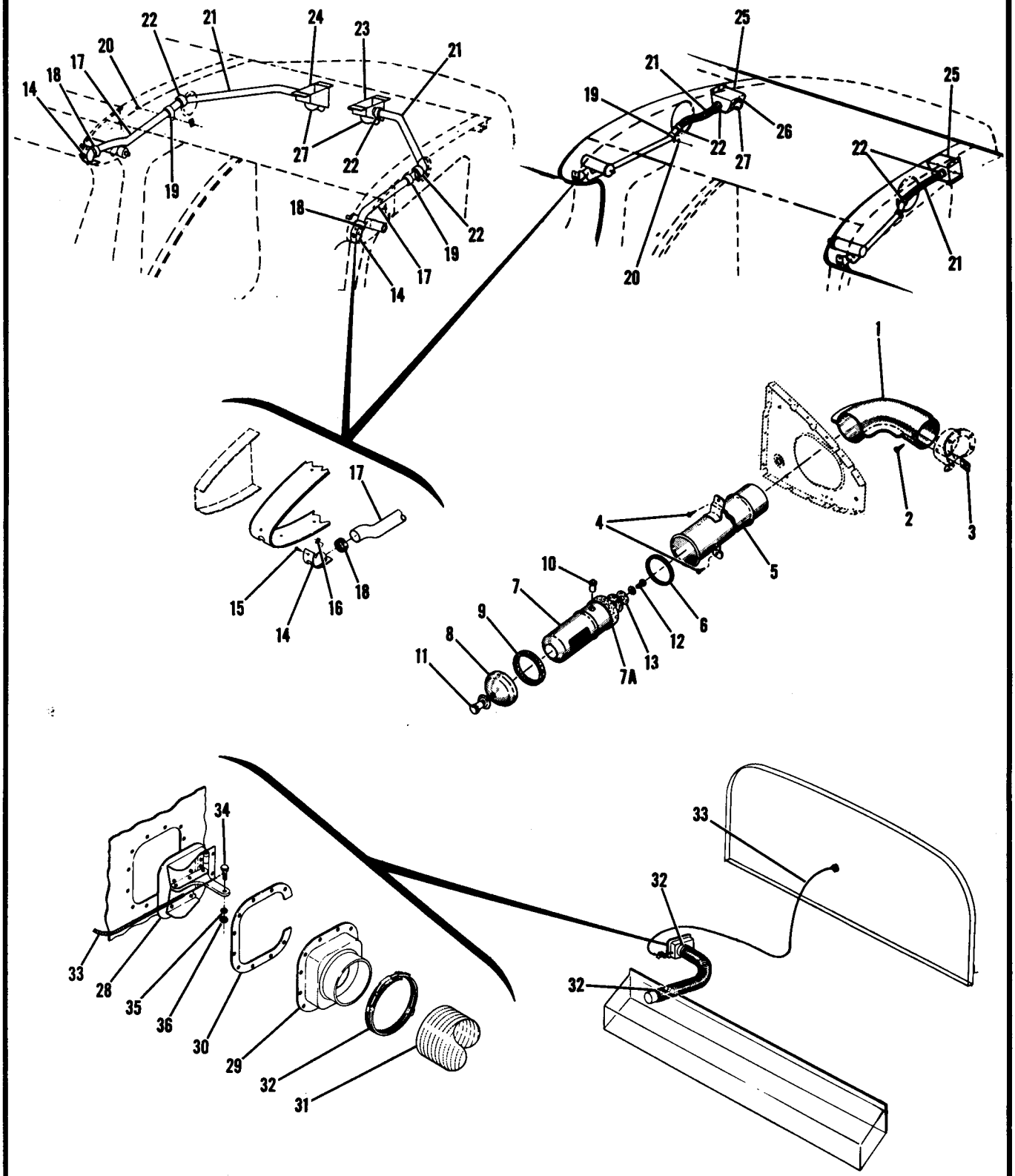

180-182 ALL SERIALS

Figure 84. Cabin Ventilation System

FIGURE AND INDEX NO.	PART NUMBER		DESCRIPTION 1 2 3 4 5 6 7	UNITS PER ASSY	USABLE ON CODE
84-			CABIN VENTILATION SYSTEM	NP	
- 1	0413233		ELBOW ASSEMBLY-CABIN VENTILATION	1	A
	0450314	*	ELBOW ASSEMBLY-CABIN VENTILATION	1	B
			ATTACHING PARTS		
- 2	S-1021Z-8-8		SCREW CESSNA STANDARD	1	
- 3	NAS446-4-3		NUT TIN A1778-8Z-3	1	
			---*---		
	0413163-23	**	OUTLET ASSEMBLY-LH	1	C
	0413163-25	**	OUTLET ASSEMBLY-RH	1	D
	0413163-24	**	OUTLET ASSEMBLY-RH	1	C
	0413163-26	**	OUTLET ASSEMBLY-LH	1	D
			ATTACHING PARTS		
- 4	S-1021Z-8-6		SCREW CESSNA STANDARD	2	
			---*---		
- 5	0413163-8		TUBE ASSEMBLY-LH	1	A
	0413163-16	*	TUBE ASSEMBLY-LH	1	B
	0413163-9		TUBE ASSEMBLY-RH	1	A
	0413163-17	*	TUBE ASSEMBLY-RH	1	B
- 6	0413163-7		SEAL-FELT	1	
- 7	0413163-18	**	OUTLET-CABIN VENTILATION	1	
- 7A	0413163-5		SEAL	1	
- 8	0413163-11		CAP ASSEMBLY-OUTLET	1	
- 9	0413163-10		SEAL-CAP	1	
- 10	0413203		CATCH-BULLET	1	
- 11	0411092-1		KNOB-CAP	1	
	0713303-2		KNOB-CAP	1	E
			ATTACHING PARTS	1	F
- 12	AN515-8R8		SCREW		
- 13	0413228	#	WASHER	1	
	0413347-1	#	WASHER	1	
			---*---	1	
- 14	0700325-1		REAR SEAT VENTS INSTALLATION	NP	F
	0700322-4		ADAPTER	2	
			SEAL-AIR VENT	2	
- 15	S-1021Z-8-8		ATTACHING PARTS		
- 16	NAS396-6-3		SCREW CESSNA STANDARD	4	
	A1793-6Z-3		NUT	4	H
			NUT TIN	4	J
- 17	S-1053E8T		---*---		
			HOSE-VENT-----18.5 IN. LG. BULK ITEM REF S-1053E8T-18.50	2	
- 18	NAS397-18-1		ATTACHING PARTS		
- 19	A2980A-16-27		CLAMP TIN A3122-18-1	1	
- 20	NAS395-19-3		CLAMP TIN	1	
	S-1021Z-8-10		NUT	1	
			SCREW CESSNA STANDARD	1	
- 21	S-1053E8T		---*---		
			HOSE-VENT-----18 IN. LONG BULK ITEM REF S-1053E8T18.0	AR	
	S-1053K8T		HOSE-VENT-18 IN. LG. BULK ITEM REF S-1053K8T18.0 ALT	AR	
- 22	NAS397-16-1		ATTACHING PARTS		
			CLAMP	2	
- 23	0700317-10		---*---		
- 24	0700317-12		BOX ASSEMBLY-AIR VENT LH	1	G
- 25	0700326-1		BOX ASSEMBLY-AIR VENT RH	1	G
- 26	0700327-1		BRACKET	2	J
- 27	0813610-3		ADAPTER-WEMAC	2	J
			VALVE-WEMAC	2	
	S-1021Z-6-8C		ATTACHING PARTS		
	A1804-6Z-3		SCREW CESSNA STANDARD	4	
			NUT TIN	4	
			---*---		
- 28	0713135-1		OUTSIDE AIR VENT INSTALLATION-FORWARD	NP	K
- 29	0713139-1		DOOR ASSEMBLY-AIR VENT	1	
- 30	0713140-1		INLET ASSEMBLY-AIR VENT	1	
			SEAL	1	

180-182 ALL SERIALS

S-PART NOS APPEARING ON THIS PAGE ARE CESSNA STANDARD

CONTINUED ON PAGE 231A

FIGURE AND INDEX NO.	PART NUMBER	DESCRIPTION 1 2 3 4 5 6 7	UNITS PER ASSY	USABLE ON CODE
84- 31	S-1053E24T	HOSE-AIR VENT TO PLENUM CHAMBER 12 IN LONG ---------- BULK ITEM REF S-1053E24T12.0 CESSNA STANDARD ATTACHING PARTS	1	
- 32	A3122-50-1	CLAMP TIN ---------- ---*---	2	
- 33	0713302-6	CONTROL-FORWARD AIR VENT---- REF 0713302-10---------- ATTACHING PARTS	1	
- 34	0450311-5	CLAMP ----------	1	
- 35	AN960-10L	WASHER ----------	1	
- 36	MS20365-1032C	NUT ---------- ---*---	1	
		A---180 SERIAL 30000 THRU 31260 B---180 SERIAL 31261 & ON 182 SERIAL 33000 & ON C---180 SERIAL 30000 THRU 32150 D---180 SERIAL 32151 & ON 182 SERIAL 33000 & ON E---180 SERIAL 30000 THRU 50355 182 SERIAL 33000 THRU 51556 F---180 SERIAL 50356 & ON 182 SERIAL 51557 & ON G---180 SERIAL 50356 THRU 50661 182 SERIAL 51557 THRU 52358 H---180 SERIAL 50356 THRU 50875 182 SERIAL 51557 THRU 53011 J---180 SERIAL 50662 & ON 182 SERIAL 52359 & ON K---180 SERIAL 18050912 & ON 182 SERIAL 18253008 & ON NOTE. FOR ACCESSORY KIT LISTINGS REFER TO PAGES 372 THRU 374B *NOTE. REFER TO NOTE * ON FIGURE 3 NOTE. ** WHEN ORDERING THIS PART FOR AIRCRAFT PRIOR TO SERIAL 18051096 & 18253755 ALSO ORDER PARTS MARKED #		

This page intentionally left blank.

Heating System

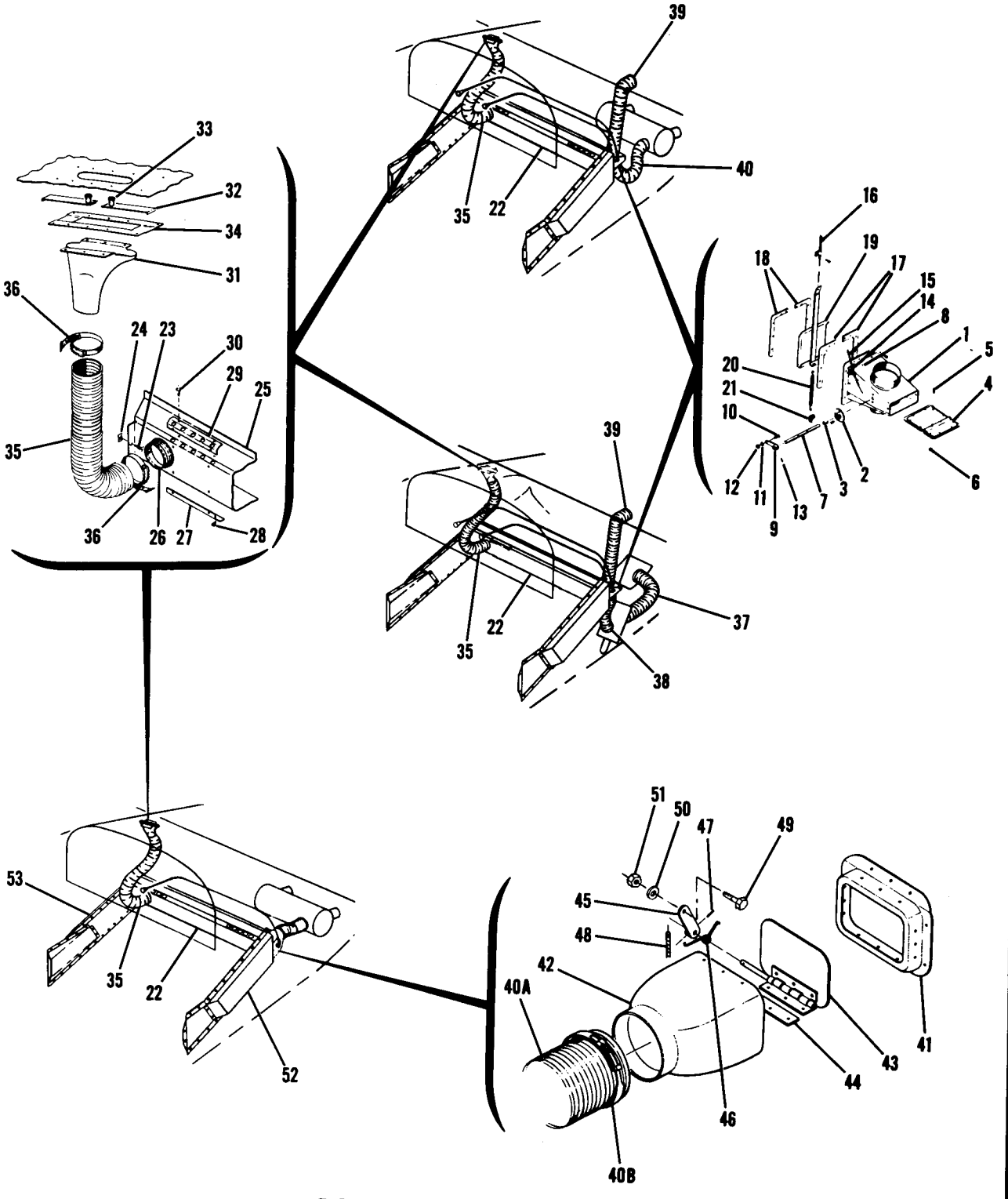

180-182 ALL SERIALS

Figure 85. Manifold Cabin Heater Installation

180-182 ALL SERIALS

FIGURE AND INDEX NO.	PART NUMBER	DESCRIPTION 1 2 3 4 5 6 7	UNITS PER ASSY	USABLE ON CODE
85-		CABIN HEATER INSTALLATION-MANIFOLD	NP	
- 1	0713019-20	VALVE ASSEMBLY-CABIN HEATER	1	F
	0713019-98	VALVE ASSEMBLY-CABIN HEATER	1	G
- 2	0713019-41	BUSHING ASSEMBLY-CABIN HEATER	2	
- 3	S-1003-12A	BEARING-----CESSNA STANDARD	1	
- 4	0713019-85	PLATE ASSEMBLY-CABIN HEATER VALVE	1	
		ATTACHING PARTS		
- 5	AN515-6R9	SCREW	2	
- 6	MS20365-632C	NUT	2	
		---*---		
- 7	0713019-19	SHAFT-CABIN HEATER VALVE	1	
- 8	0713019-16	ANGLE-CABIN HEATER VALVE	1	
- 9	0713019-24	ARM ASSEMBLY-CABIN HEATER VALVE	1	
		ATTACHING PARTS		
- 10	0450311-5	CLAMP	1	
- 11	AN960A10L	WASHER	1	
- 12	MS20364-1032C	NUT	1	
- 13	MS16562-16	ROLL PIN EN	1	
		---*---		
- 14	0450286	CLIP	1	
- 15	0411090-22	CONTROL-CABIN HEAT REF 0411090-20	1	D
	0713302-5	CONTROL-CABIN HEAT REF 0713302-1	1	H
- 16	0411090-13	CONTROL-CABIN AIR REF 0411090-13	1	D
	0713302-6	CONTROL-CABIN AIR REF 0713302-2	1	H
- 17	0713019-78	SPACER-HEATER VALVE	2	F
	0713019-99	SPACER-HEATER VALVE	2	G
- 18	0713019-35	SPACER-HEATER VALVE	2	F
	0713019-100	SPACER-HEATER VALVE	2	G
- 19	0713019-75	VALVE ASSEMBLY-CABIN AIR	1	K
- 20	0713019-37	SPRING-CABIN AIR VALVE	1	K
		ATTACHING PARTS		
- 21	0413151	BRACKET	1	K
		---*---		
- 22	0713019-90	DUCT ASSEMBLY-CABIN HEATER	1	D
	0713019-93	DUCT ASSEMBLY-CABIN HEATER	1	H
	0713019-102	DUCT ASSEMBLY-CABIN HEATER	1	J
		ATTACHING PARTS		
- 23	S-1021Z-8-8	SCREW CESSNA STANDARD	2	
- 24	NAS395-14-3	NUT TIN A1274-8Z-3	2	
		---*---		
- 25	0713019-88	DUCT-HEATER	1	D
	0713019-95	DUCT-HEATER	1	E
- 26	0713019-3	OUTLET-DEFROSTER	1	
	0713505-1	BRACKET	1	E
	0713133-1	UNION-COLD AIR	1	J
- 27	0713019-86	RETAINER-UPHOLSTERY	3	
		ATTACHING PARTS		
- 28	S-1021Z-8-8	SCREW CESSNA STANDARD	4	
		---*---		
- 29	0713019-91	RETAINER-UPHOLSTERY	1	
		ATTACHING PARTS		
- 30	S-1021Z-8-8	SCREW CESSNA STANDARD	4	
		---*---		
- 31	0713003-45	NOZZLE ASSEMBLY-DEFROSTER	1	
- 32	0713019-43-156	VALVE ASSEMBLY-DEFROSTER	2	D
	0713019-94-156	VALVE ASSEMBLY-DEFROSTER	2	E
- 33	0411092-1	KNOB-DEFROSTER VALVE ASSEMBLY	1	D
	0713303-2	KNOB-DEFROSTER VALVE ASSEMBLY	1	E
		ATTACHING PARTS		
	AN515-8R4	SCREW	1	
	AN936A8	WASHER	1	
		---*---		
- 34	0713019-7	GUIDE-DEFROSTER VALVE	1	
- 35	S-1053E16T	HOSE-CABIN HEATER DUCT TO DEFROSTER-----24 IN. LONG	1	
		BULK ITEM REF S-1053E16T24.0 CESSNA STANDARD		
	S-1053E16W	HOSE-HEATER DUCT TO DEFROSTER-24 IN. LG.-----BULK ITEM	1	
		REF S-1053E16W24.0 ALT CESSNA STANDARD		
		ATTACHING PARTS		
- 36	NAS397-32	CLAMP TIN A3499-32	2	
		---*---		

CONTINUED ON PAGE 234

FIGURE AND INDEX NO.	PART NUMBER	DESCRIPTION 1 2 3 4 5 6 7	UNITS PER ASSY	USABLE ON CODE
85- 37	S-1053E24T	HOSE-AIR BOX TO SHROUD 12 IN LONG BULK ITEM ----	1	A
		REF S-1053E24T12.0 CESSNA STANDARD		
		ATTACHING PARTS		
	NAS397-50-1	CLAMP TIN A3122-50-1 ----------	2	A
		---*---		
- 38	S-1053K24T	HOSE-SHROUD TO HEATER VALVE 17 IN. LONG BULK ITEM	1	A
		REF S-1053K24T17.0 CESSNA STANDARD		
		ATTACHING PARTS		
	NAS397-50-1	CLAMP TIN A3122-50-1 ----------	2	A
		---*---		
- 39	S-1053E24T	HOSE-VERTICAL BAFFLE TO HEATER VALVE 21.8 IN LONG ----	1	C
		BULK ITEM REF S-1053E24T21.8 CESSNA STANDARD		
		ATTACHING PARTS		
	NAS397-50-1	CLAMP TIN A3122-50-1 ----------	2	
		---*---		
- 40	S-1053K24T	HOSE-SHROUD TO HEATER VALVE 23 IN. LONG BULK ITEM	1	B
		REF S-1053E24T23.0 CESSNA STANDARD		
		ATTACHING PARTS		
	NAS397-50-1	CLAMP TIN A3122-50-1 ----------	2	
		---*---		
-40A	S-1053K24T	HOSE-VALVE TO MUFFLER-----23.0 IN. LONG BULK ITEM ----	1	
		REF S-1053K24T23 CESSNA STANDARD		
		ATTACHING PARTS		
-40B	NAS397-50-1	CLAMP TIN A3122-50-1 ----------	2	
		---*---		
	0753011-1	VALVE ASSEMBLY-WARM AIR ----------	1	J
- 41	0753010-1	SEAT-WARM AIR VALVE----------	1	
- 42	1253032-1	BODY ASSEMBLY-VALVE----------	1	
- 43	1253034-1	VALVE PLATE ASSEMBLY ----------	1	
- 44	1253040-1	SHIM----------	1	
	1253033-2	REINFORCEMENT ----------	1	
- 45	1253037-1	ARM-CONTROL ----------	1	
		ATTACHING PARTS		
- 46	1253041-1	SPRING ----------	1	
- 47	NAS561C2-8	ROLL PIN ----------	1	
		---*---		
- 48	0713141-4	CONTROL-CABIN HEAT REF 0713141-3 ----------	1	J
		ATTACHING PARTS		
- 49	0450311-5	CLAMP ----------	1	
- 50	AN960-10L	WASHER----------	1	
- 51	MS20365-1032C	NUT ----------	1	
	AN742D3	CLAMP ----------	1	
		---*---		
- 52	0713019-104	DUCT-RH ----------	1	L
- 53	0713019-1	DUCT-LH ----------	1	L

A---180 SERIAL 30000 THRU 32150
B---180 SERIAL 32151 THRU 50911
182 SERIAL 33000 THRU 53007
C---180 SERIAL 30000 THRU 50911
182 SERIAL 33000 THRU 53007
D---180 SERIAL 30000 THRU 50355
182 SERIAL 33000 THRU 51556
E---180 SERIAL 50356 & ON
182 SERIAL 51557 & ON
F---180 SERIAL 30000 THRU 50662
182 SERIAL 33000 THRU 52366
G---180 SERIAL 50663 THRU 50911
182 SERIAL 52367 THRU 53007
H---180 SERIAL 50356 THRU 50911
182 SERIAL 51557 THRU 53007
J---180 SERIAL 18050912 & ON
182 SERIAL 18253008 & ON
K---180 SERIAL 30000 THRU 50911
182 SERIAL 33000 THRU 53007
L---180 SERIAL 18051064 & ON

FIGURE AND INDEX NO.	PART NUMBER	DESCRIPTION 1 2 3 4 5 6 7	UNITS PER ASSY	USABLE ON CODE
86-		STEWART WARNER HEATER INSTALLATION	1	A
- 1	0511231-17	HEATER ASSEMBLY SEE FIGURE 141	1	
		ATTACHING PARTS		
- 2	475229	BELTING SW	1	
- 3	475232	STRAP ASSEMBLY SW	1	
		---*---		
	0511231-4	STAND PIPE SEE FIGURE 141	1	
	0511231-5	DRIP PIPE-----SEE FIGURE 141	1	
	0311779-2	HEATER-MODEL 979-B-1 SEE FIGURE 141	1	
- 4	AN916-1D	ELBOW	1	
- 5	AN816-2D	ADAPTER	1	
- 6	485201	BLOWER ASSEMBLY SW	1	
	476210	MOTOR-BLOWER SW	1	
- 7	0511231-8	SHIELD-BLOWER	1	
		ATTACHING PARTS		
- 8	S-1021Z-8-8	SCREW CESSNA STANDARD	5	
		---*---		
- 9	0511231-20	DEFLECTOR	1	
		ATTACHING PARTS		
- 10	S-1021Z-8-8	SCREW CESSNA STANDARD	2	
		---*---		
- 11	0311779-30	THERMOSTAT-REMOTE CONTROL	1	
		ATTACHING PARTS		
	S-1021Z-8-10	SCREW CESSNA STANDARD	4	
	A1776-8Z-3	NUT TIN	4	
		---*---		
- 12	MS35489-4	GROMMET-THERMOSTAT WIRE	1	
- 13	0311752-8	SUPPORT-HEATER	1	
- 14	0511231-15	CLAMP-HEATER MOUNTING	1	
		ATTACHING PARTS		
- 15	AN520-10R8	SCREW	1	
- 16	MS20365-1032C	NUT	1	
		---*---		
- 17	0511231-14	DEFLECTOR ASSEMBLY-AIR OUTLET	1	
		ATTACHING PARTS		
- 18	S-1021Z-8-6	SCREW CESSNA STANDARD	4	
- 19	AN960A10L	WASHER	AR	
		---*---		
- 20	0311752-5	STACK-EXHAUST	1	
		ATTACHING PARTS		
- 21	0311752-10	TAPE	1	
- 22	AN741D13	CLAMP	1	
- 23	AN3-5A	BOLT	1	
- 24	MS20365-1032C	NUT	1	
		---*---		
- 25	0511231-39	DUCT	1	
- 26	0511231-6	STIFFENER	1	
- 27	0511231-7	DOUBLER-HEATER CUTOUT	1	
- 28	0511231-22	PLATE-HEATER CUTOUT	1	
- 29	0311796	SCREEN	1	
		ATTACHING PARTS		
- 30	S-1021Z-8-8	SCREW CESSNA STANDARD	2	
		---*---		
- 31	0500106-78	LINE-FUEL SOLENOID VALVE TO HEATER	1	
- 32	MS20822-2D	ELBOW	2	
- 33	0311752-30	FILTER-FUEL	1	
- 34	AN914-1	ELBOW	1	
- 35	0311779-18	NIPPLE	1	
- 36	AN816-2B	ADAPTER	1	
- 37	0500106-77	LINE-FUEL SOLENOID TO FILTER	1	
		ATTACHING PARTS		
- 38	A2981A-4-27	CLAMP TIN	1	
- 39	S-1021Z-8-6	SCREW CESSNA STANDARD	1	
		---*---		

180 ALL SERIALS

CONTINUED ON PAGES 236 & 237

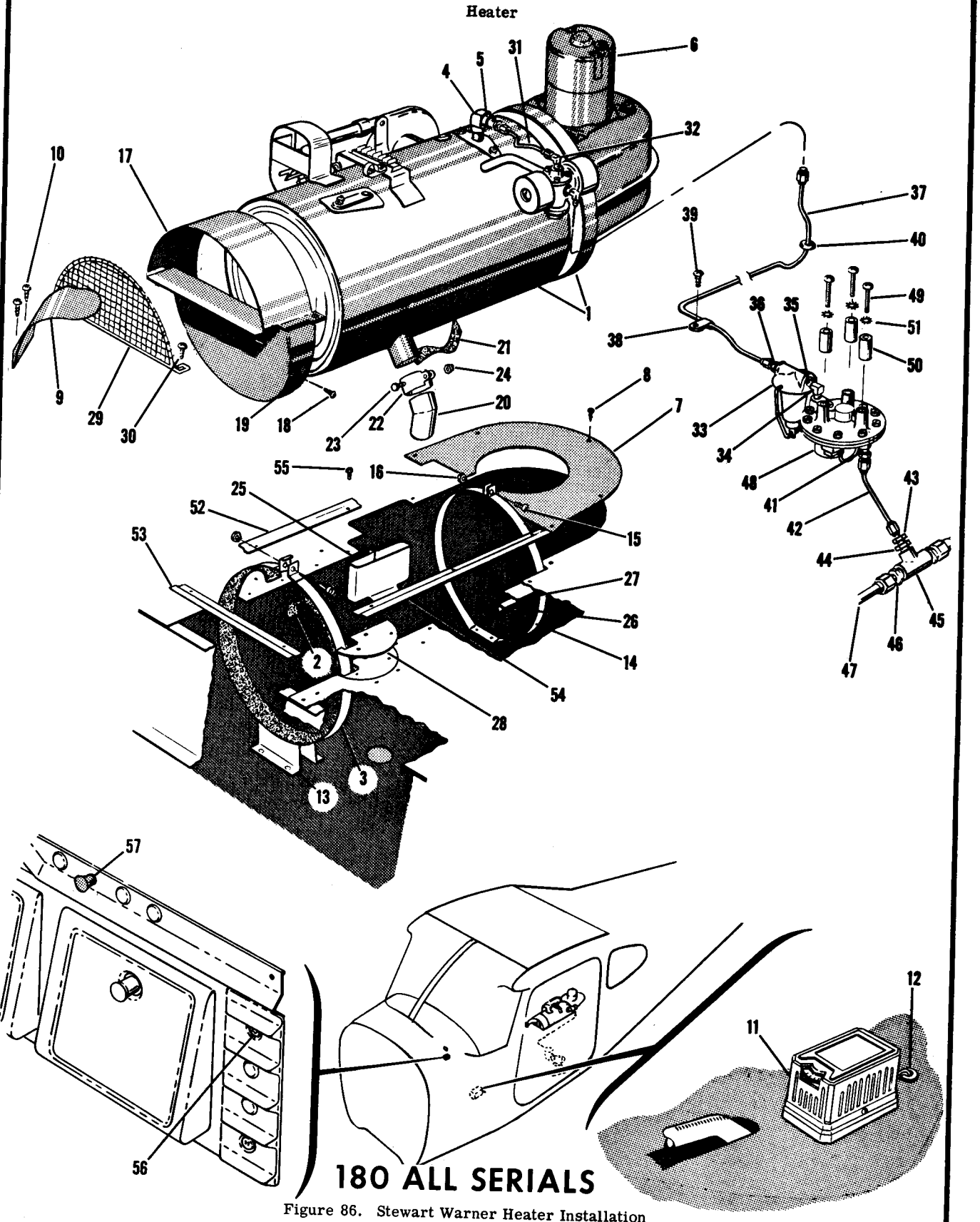

Figure 86. Stewart Warner Heater Installation

FIGURE AND INDEX NO.	PART NUMBER	DESCRIPTION 1 2 3 4 5 6 7	UNITS PER ASSY	USABLE ON CODE
86- 40	MS35489-2S	GROMMET	1	
- 41	AN816-2B	ADAPTER	1	
- 42	0500106-76	LINE-FUEL ADAPTER TO TEE	1	
- 43	AN816-2B	ADAPTER	1	
- 44	AN912-1D	BUSHING	1	
- 45	AN917-2D	TEE	1	
- 46	AN816-6D	ADAPTER	2	
- 47	0500106-152	LINE-FUEL TEE TO FUEL SELECTOR VALVE	1	
- 48	0311779-17	VALVE ASSEMBLY-SAFETY	1	
		ATTACHING PARTS		
- 49	AN520-10R20	SCREW	3	
- 50	NAS43-3-64	SPACER	3	
- 51	0311779-26	WASHER-LOCK	3	
		---*---		
- 52	0311772-2	RETAINER STRIP-CARPET INBOARD	1	
- 53	0311772-3	RETAINER STRIP-CARPET FORWARD	1	
- 54	0311772-4	RETAINER STRIP-CARPET OUTBOARD	1	
		ATTACHING PARTS		
- 55	S-10212-8-8	SCREW CESSNA STANDARD	3	
		---*---		
- 56	CM-15	CIRCUIT BREAKER SPT	1	
- 57	0713035	SWITCH ASSEMBLY-HEATER	1	
	0411092-1	KNOB-SWITCH	1	

A---180 SERIAL 30000 & ON

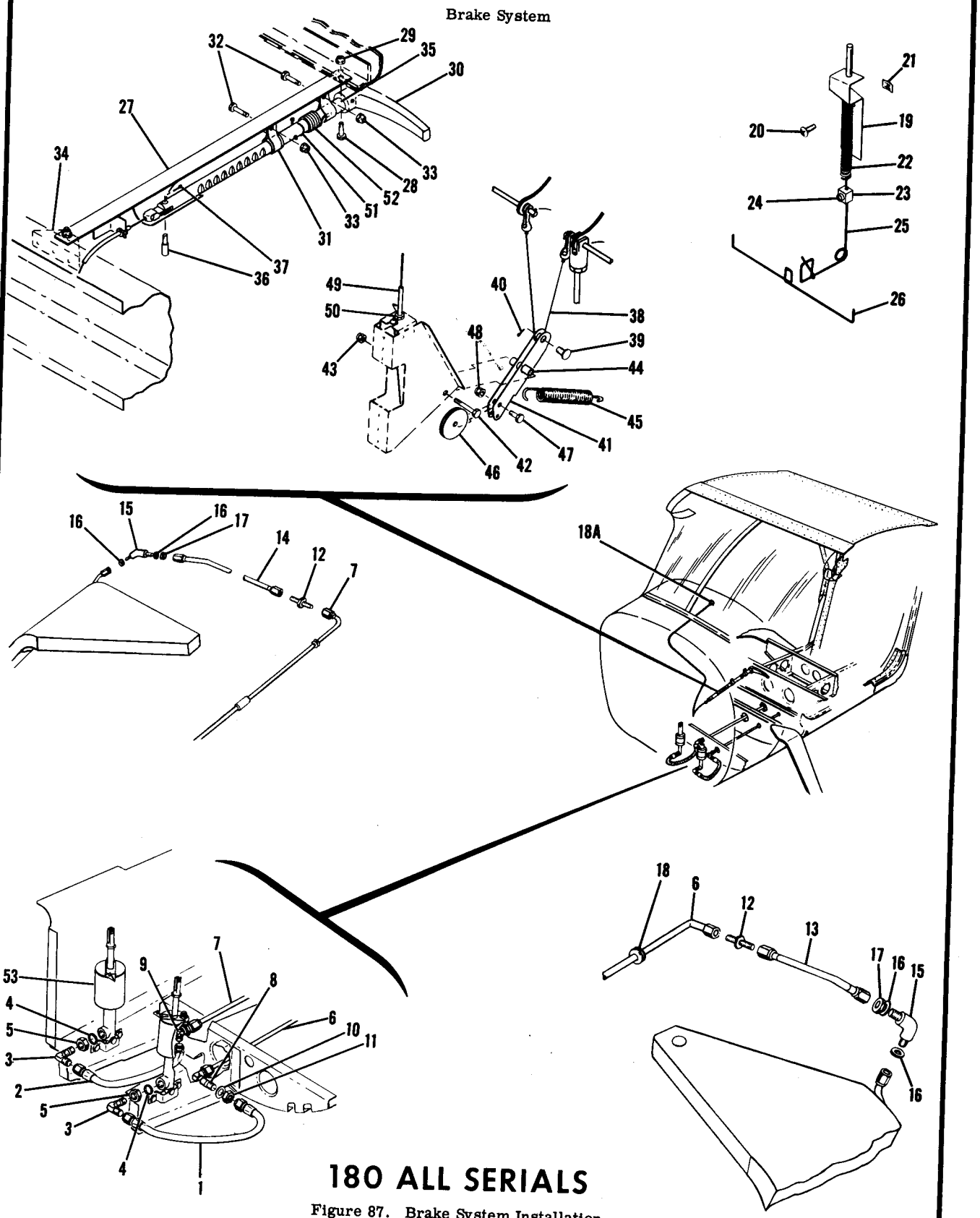

180 ALL SERIALS

Figure 87. Brake System Installation

FIGURE AND INDEX NO.	PART NUMBER	DESCRIPTION 1 2 3 4 5 6 7	UNITS PER ASSY	USABLE ON CODE
87-		BRAKE SYSTEM INSTALLATION	NP	A
- 1	S-1167-4-0100	HOSE ASSEMBLY-MASTER CYLINDER TO ELBOW LH	1	B
	S-1167-4-0100	HOSE ASSEMBLY-MASTER CYLINDER TO ELBOW RH	1	B
	S-1167-4-0100	HOSE ASSEMBLY-MASTER CYLINDER TO ELBOW LH	1	C
- 2	S-1167-4-0080	HOSE ASSEMBLY-MASTER CYLINDER TO ELBOW RH	1	C
		ATTACHING PARTS		
- 3	AN833-4D	ELBOW	1	L
	MS20822-4-4D	ELBOW	1	L M
	AN833-4D	ELBOW	1	Q
- 4	AN902B4	GASKET	1	L
- 5	AN924-4D	NUT	1	L
		---*---		
- 6	0500106-35	LINE ASSEMBLY-BRAKE LH	1	
- 7	0500106-14	LINE ASSEMBLY-BRAKE RH	1	
		ATTACHING PARTS		
- 8	AN833-4D	ELBOW-LH	1	
- 9	AN837-4D	ELBOW-RH	1	
- 10	AN960-716L	WASHER	1	
- 11	AN924-4D	NUT	1	
- 12	AN815-4D	UNION	1	
		---*---		
- 13	0500106-12	LINE ASSEMBLY-BRAKE LH	1	
- 14	0500106-13	LINE ASSEMBLY-BRAKE RH	1	
		ATTACHING PARTS		
- 15	AN833-4D	ELBOW	1	
- 16	AN960-716L	WASHER	2	
- 17	AN924-4D	NUT	1	
		---*---		
- 18	MS35489-7S	GROMMET	2	
		PARKING BRAKE INSTALLATION	NP	D
-18A	0411090-29	CONTROL-PARKING BRAKE REF 0411090-7	1	
- 19	0413186-3	CLAMP-PARKING BRAKE WIRE	1	
		ATTACHING PARTS		
- 20	S-1021Z-8-8	SCREW CESSNA STANDARD	2	
- 21	NAS446-4-3	NUT TIN A1778-8Z-3	2	
		---*---		
- 22	0441021	SPRING-PARKING BRAKE	1	
- 23	0713037	CLAMP-PARKING BRAKE CONTROL	1	
		ATTACHING PARTS		
- 24	AN500A8-5	SCREW	1	
		---*---		
- 25	0713020-1	LINKAGE SPRING-PARKING BRAKE	1	
- 26	0713020-2	CROSSARM-PARKING BRAKE	1	
		PARKING BRAKE INSTALLATION	NP	E
	0713070-4	RACK-POSITIONING	1	
	0713070-5	ANGLE-PARKING BRAKE	1	
- 27	0713070-23	ANGLE-PARKING BRAKE	1	G
	0713070-33	ANGLE-PARKING BRAKE	1	H
		ATTACHING PARTS		
- 28	AN3-5A	BOLT	1	G
	AN3-6A	BOLT	1	H
	AN3-3A	BOLT	1	
	NAS43DD-3-16	SPACER	1	H
- 29	MS20365-1032C	NUT	2	
		---*---		
- 30	0813150-55	HANDLE ASSEMBLY-PARKING BRAKE	1	
		ATTACHING PARTS		
- 31	0713070-25	CLAMP-PARKING BRAKE	2	N
	0713070-25	CLAMP-PARKING BRAKE	1	P
	0713070-15	SPACER	2	N
	0713070-15	SPACER	1	P
	0713070-32	SPACER	1	P
- 32	AN3-6A	BOLT	2	
- 33	MS20365-1032C	NUT	2	
		---*---		

180 ALL SERIALS

S-PART NOS APPEARING ON THIS PAGE ARE CESSNA STANDARD

CONTINUED ON PAGE 240

FIGURE AND INDEX NO.	PART NUMBER	DESCRIPTION 1 2 3 4 5 6 7	UNITS PER ASSY	USABLE ON CODE
87-	0811490-6	HANDLE-PARKING BRAKE	1	
	0813150-54	TUBE-PARKING BRAKE	1	
	NAS561-5-12	ROLLPIN-----EN	1	
- 34	0713070-12	ANGLE-PARKING BRAKE	1	
- 35	0813156-4	HOUSING ASSEMBLY-HANDLE	1	
- 36	0713070-6	PIN-POSITIONING	1	
- 37	MS24665-130	PIN-COTTER	1	
- 38	0510105-70	CABLE ASSEMBLY	1	
- 39	MS20392-4-13	PIN	1	
- 40	MS24665-281	PIN-COTTER	1	
- 41	0713070-9	BELLCRANK ASSEMBLY	1	
		ATTACHING PARTS		
- 42	AN3-13A	BOLT	1	
- 43	MS20365-1032C	NUT	1	
		---*---		
- 44	0713070-11	BUSHING-BELLCRANK	1	
- 45	0713063	SPRING-PARKING BRAKE	1	
- 46	S-378-1	PULLEY CESSNA STANDARD	1	
		ATTACHING PARTS		
- 47	AN3-5A	BOLT	1	
- 48	MS20364-1032C	NUT	1	
		---*---		
- 49	0713070-16	TUBE ASSEMBLY	1	J
	0713070-22	TUBE ASSEMBLY	1	J
	0713070-28	TUBE ASSEMBLY	1	H
	0713070-31	TUBE ASSEMBLY	1	H
- 50	AN315-3R	NUT	4	
- 51	0713070-24	CATCH-PARKING BRAKE	1	K
		ATTACHING PARTS		
	AN960-4	WASHER	1	
		---*---		
- 52	0861910	SPRING-PARKING BRAKE	1	F
- 53		MASTER BRAKE CYLINDER INSTALLATION SEE FIGURE 89 ----	NP	

A---180 SERIAL 30000 & ON
B---180 SERIAL 30000 THRU 32150
C---180 SERIAL 32151 & ON
D---180 SERIAL 30000 THRU 32661
E---180 SERIAL 32662 & ON
F---180 SERIAL 30000 THRU 50225
G---180 SERIAL 50226 THRU 50355
H---180 SERIAL 50356 & ON
J---180 SERIAL 32662 THRU 50355
K---180 SERIAL 50226 & ON
L---180 SERIAL 30000 THRU 50303
M---180 SERIAL 50304 THRU 50661
N---180 SERIAL 50356 THRU 50434
P---180 SERIAL 50435 & ON
Q---180 SERIAL 50662 & ON

FIGURE AND INDEX NO.	PART NUMBER	DESCRIPTION 1 2 3 4 5 6 7	UNITS PER ASSY	USABLE ON CODE
88-		BRAKE SYSTEM INSTALLATION	NP	A
- 1	S-1167-4-0100	HOSE ASSEMBLY-MASTER CYLINDER TO ELBOW LH	1	B
	S-1167-4-0100	HOSE ASSEMBLY-MASTER CYLINDER TO ELBOW RH	1	B
	S-1167-4-0100	HOSE ASSEMBLY-MASTER CYLINDER TO ELBOW LH	1	C
- 2	S-1167-4-0080	HOSE ASSEMBLY-MASTER CYLINDER TO ELBOW RH	1	C
		ATTACHING PARTS		
- 3	AN833-4D	ELBOW	1	J
	MS20822-4-4D	ELBOW	1	K
	AN833-4D	ELBOW	1	O
- 4	AN902B4D	GASKET	1	J
- 5	AN924-4D	NUT	1	J
		---*---		
- 6	0500106-182	LINE ASSEMBLY-BRAKE LH	1	
- 7	0500106-183	LINE ASSEMBLY-BRAKE RH	1	
		ATTACHING PARTS		
- 8	AN833-4D	ELBOW-LH	1	
- 9	AN837-4D	ELBOW-RH	1	
	AN960-716L	WASHER	1	
- 10	AN924-4D	NUT	1	
- 11	AN815-4D	UNION	1	
		---*---		
- 12	0500106-180	LINE ASSEMBLY-BRAKE LH	1	N
	0500106-285	LINE ASSEMBLY-BRAKE LH	1	O
- 13	0500106-181	LINE ASSEMBLY-BRAKE RH	1	N
	0500106-278	LINE ASSEMBLY-BRAKE RH	1	O
		ATTACHING PARTS		
- 14	AN833-4D	ELBOW	1	N
	AN832-4D	UNION	1	O
- 15	AN960-716L	WASHER	2	N
- 16	AN924-4D	NUT	1	
		---*---		
- 17	0500106-194	LINE ASSEMBLY-BRAKE RH	1	
		ATTACHING PART		
- 18	AN837-4D	ELBOW	1	
	AN960-716L	WASHER	1	
	AN924-4D	NUT	1	
		---*---		
-18A	0411090-29	PARKING BRAKE INSTALLATION	NP	B
- 19	0413186-3	CONTROL-PARKING BRAKE REF 0411090-7	1	
		CLAMP-PARKING BRAKE WIRE	1	
		ATTACHING PARTS		
- 20	S-1021Z-8-8	SCREW CESSNA STANDARD	2	
- 21	NAS446-4-3	NUT TIN A1778-8Z-3	2	
		---*---		
- 22	0441021	SPRING-PARKING BRAKE	1	
- 23	0713037	CLAMP-PARKING BRAKE CONTROL	1	
		ATTACHING PARTS		
- 24	AN500A8-5	SCREW	1	
		---*---		
- 25	0713020-1	LINKAGE SPRING-PARKING BRAKE	1	
- 26	0713020-2	CROSSARM-PARKING BRAKE	1	
		PARKING BRAKE INSTALLATION	NP	C
- 27	0713070-4	RACK-POSITIONING	1	
- 28	0713070-5	ANGLE-PARKING BRAKE	1	
- 29	0713070-23	ANGLE-PARKING BRAKE	1	E
	0713070-33	ANGLE-PARKING BRAKE	1	F
		ATTACHING PARTS		
- 30	AN3-5A	BOLT	1	E
	AN3-6A	BOLT	1	F
	AN3-3A	BOLT	1	
	NAS43DD-3-16	SPACER	1	F
- 31	MS20365-1032C	NUT	2	
		---*---		
- 32	0861910	SPRING-PARKING BRAKE	1	D
- 33	0813150-55	HANDLE ASSEMBLY-PARKING BRAKE	1	
		ATTACHING PARTS		
- 34	0713070-25	CLAMP-PARKING BRAKE	2	L
	0713070-25	CLAMP-PARKING BRAKE	1	M

182 ALL SERIALS

S-PART NOS APPEARING ON THIS PAGE ARE CESSNA STANDARD

CONTINUED ON PAGES 242 & 243

Brake System (Cont)

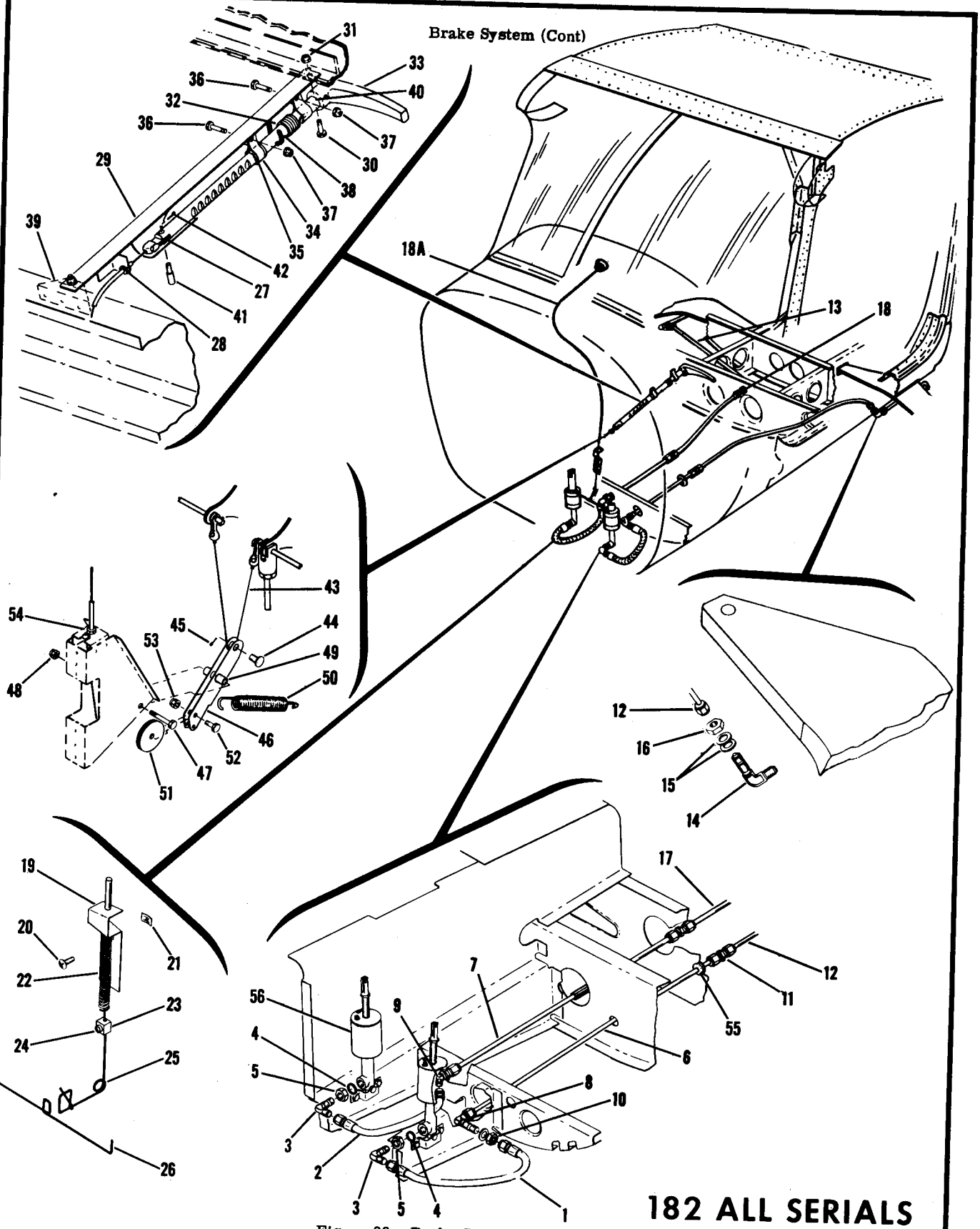

182 ALL SERIALS

Figure 88. Brake System Installation

FIGURE AND INDEX NO.	PART NUMBER	DESCRIPTION 1 2 3 4 5 6 7	UNITS PER ASSY	USABLE ON CODE
88- 35	0713070-15	SPACER-PARKING BRAKE	2	L
	0713070-15	SPACER-PARKING BRAKE	1	M
	0713070-32	SPACER-PARKING BRAKE	1	M
- 36	AN3-6A	BOLT	2	
- 37	MS20365-1032C	NUT	2	
		---*---		
	0811490-6	HANDLE-PARKING BRAKE	1	
	0813150-54	TUBE-PARKING BRAKE	1	
	NAS561-5-12	ROLLPIN-----EN	1	
- 38	0713070-24	CATCH-PARKING BRAKE	1	
- 39	0713070-12	ANGLE-PARKING BRAKE	1	G
- 40	0813156-4	HOUSING ASSEMBLY-HANDLE	1	
- 41	0713070-6	PIN-POSITIONING	1	
- 42	MS24665-130	PIN-COTTER	1	
- 43	0510105-70	CABLE ASSEMBLY	1	
	0510105-170	CABLE ASSEMBLY-----STAINLESS STEEL	1	
- 44	MS20392-4-13	PIN	1	
- 45	MS24665-281	PIN-COTTER	1	
- 46	0713070-9	BELLCRANK ASSEMBLY	1	
		ATTACHING PARTS	1	
- 47	AN3-13A	BOLT	1	
- 48	MS20365-1032C	NUT	1	
		---*---		
- 49	0713070-11	BUSHING-BELLCRANK	1	
- 50	0713063	SPRING-PARKING	1	
- 51	S-378-1	PULLEY CESSNA STANDARD	1	
		ATTACHING PARTS		
- 52	AN3-5A	BOLT	1	
- 53	MS20364-1032C	NUT	1	
		---*---		
	0713070-16	TUBE ASSEMBLY	1	H
	0713070-22	TUBE ASSEMBLY	1	H
	0713070-28	TUBE ASSEMBLY	1	F
	0713070-31	TUBE ASSEMBLY	1	F
- 54	AN315-3R	NUT	4	
- 55	MS35489-7S	GROMMET	1	
- 56		MASTER BRAKE CYLINDER INSTALLATION SEE FIGURE 89	NP	

A---182 SERIAL 33000 & ON
B---182 SERIAL 33000 THRU 33842
C---182 SERIAL 33843 & ON
D---182 SERIAL 33843 THRU 51051
E---182 SERIAL 51052 THRU 51556
F---182 SERIAL 51557 & ON
G---182 SERIAL 51052 & ON
H---182 SERIAL 33843 THRU 51556
J---182 SERIAL 33000 THRU 51937
K---182 SERIAL 51938 THRU 52358
L---182 SERIAL 51557 THRU 51745
M---182 SERIAL 51746 & ON
N---182 SERIAL 33000 THRU 52358
O---182 SERIAL 52359 & ON

Flight Controls

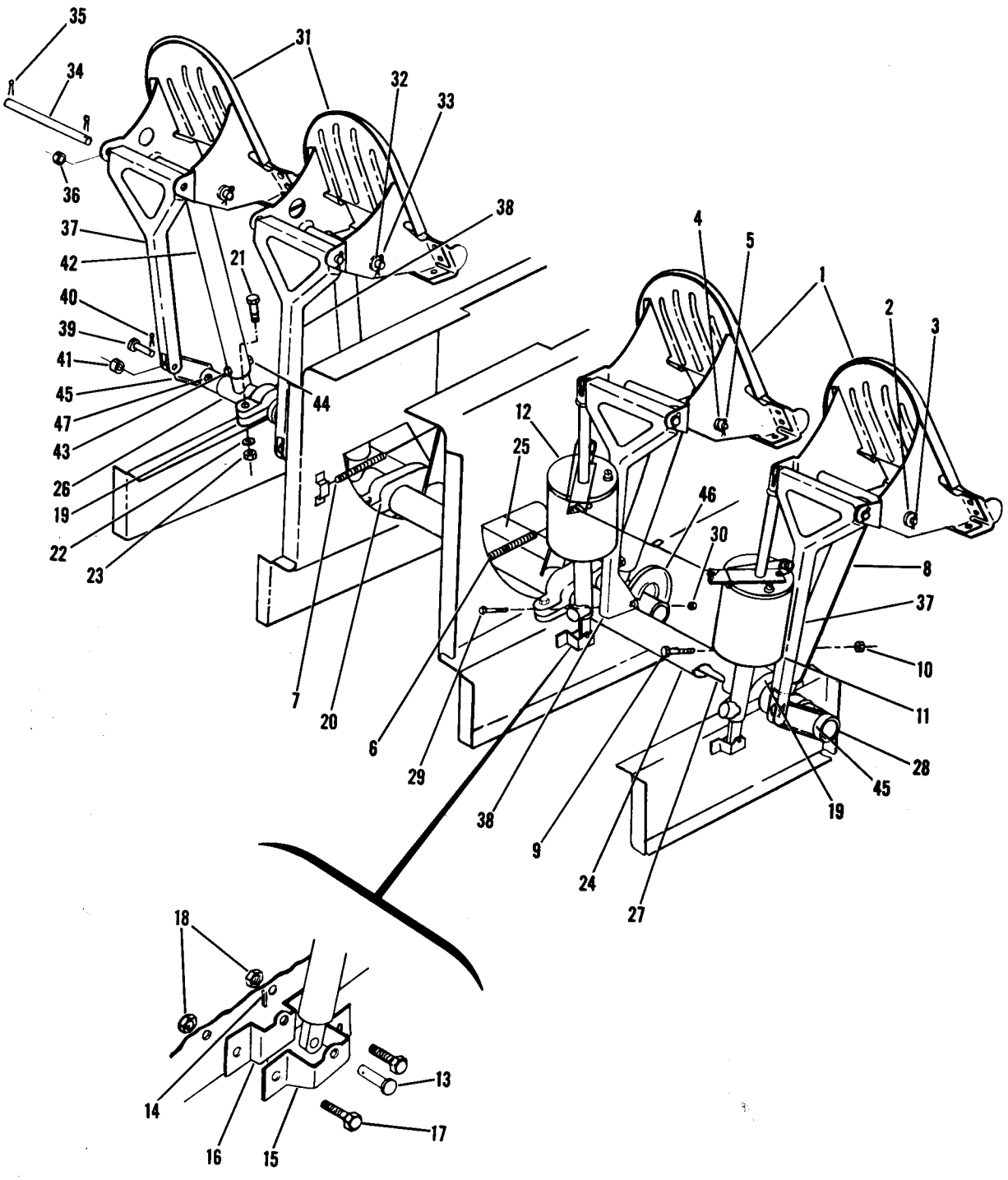

180-182 ALL SERIALS

Figure 89. Rudder and Brake Pedal Installation

FIGURE AND INDEX NO.	PART NUMBER	DESCRIPTION 1 2 3 4 5 6 7	UNITS PER ASSY	USABLE ON CODE
89-		PEDAL INSTALLATION-RUDDER & BRAKE LH	NP	A
- 1	0310453	PEDAL-BRAKE & RUDDER	2	
		ATTACHING PARTS		
- 2	0411369-2	SHAFT	1	
- 3	MS24665-285	PIN-COTTER	2	
- 4	0411778-2	SHAFT	1	
- 5	MS24665-132	PIN-COTTER	2	
		---*---		
- 6	0310196-5	SPRING-BRAKE & RUDDER RETURN LH	1	B
- 7	0310196-12	SPRING-BRAKE & RUDDER RETURN RH	1	B
- 8	0411307	ARM-RUDDER BAR	2	
		ATTACHING PARTS		
- 9	AN3-11A	BOLT	1	
- 10	MS20365-1032C	NUT	1	
		---*---		
- 11	0541138-17	MASTER CYLINDER ASSEMBLY-BRAKE LH SEE FIGURE 137	1	C
- 12	0541138-18	MASTER CYLINDER ASSEMBLY-BRAKE RH SEE FIGURE 137	1	C
	0541138-16	MASTER CYLINDER ASSEMBLY-BRAKE-----SEE FIGURE 137	2	D
		ATTACHING PARTS		
- 13	MS20392-2-15	PIN	1	
- 14	MS24665-132	PIN-COTTER	1	
		---*---		
- 15	0411550	BRACKET-BRAKE CYLINDER OUTSIDE	2	
- 16	0411549	BRACKET-BRAKE CYLINDER INSIDE	2	
		ATTACHING PARTS		
- 17	AN3-4A	BOLT	2	
- 18	MS20365-1032C	NUT	2	
		---*---		
- 19	0411263	BEARING ASSEMBLY-OUTBOARD ----MATCHED SET	2	J
		WHEN EXHAUSTED USE 0411263-5 & -6		
- 20	0411264	BEARING ASSEMBLY-INBOARD MATCHED SET	2	J
		WHEN EXHAUSTED USE 0411264-5 & -6		
	0411263-5 *	BEARING HALF-UPPER OUTBOARD	2	
	0411263-6 *	BEARING HALF-LOWER OUTBOARD	2	
	0411264-5 *	BEARING HALF-UPPER INBOARD	2	
	0411264-6 *	BEARING HALF-LOWER INBOARD	2	
		ATTACHING PARTS		
- 21	AN3-14A	BOLT	2	
- 22	AN960-10	WASHER	2	
- 23	MS20365-1032C	NUT	2	
		---*---		
- 24	0411306	WELD ASSEMBLY LH	1	E
	0411306-5	WELD ASSEMBLY LH	1	F
	0411306-3	WELD ASSEMBLY LH	1	G
	0411306-9	WELD ASSEMBLY LH	1	H

CONTINUED ON PAGE 246

180-182 ALL SERIALS

FIGURE AND INDEX NO.	PART NUMBER	DESCRIPTION 1 2 3 4 5 6 7	UNITS PER ASSY	USABLE ON CODE
89- 25	0411306-1	WELD ASSEMBLY RH	1	E
	0411306-6	WELD ASSEMBLY RH	1	F
	0411306-2	WELD ASSEMBLY RH	1	G
	0411306-10	WELD ASSEMBLY RH	1	H
- 26	S-1003-43A	BEARING CESSNA STANDARD	4	
- 27	0411565	TUBE-DUAL BRAKE	2	
- 28	0411562	HUB-DUAL BRAKE	4	I
		ATTACHING PARTS		
- 29	AN3-10A	BOLT	1	
- 30	MS20365-1032C	NUT	1	
		---*---		
- 31	0310453	PEDAL INSTALLATION-BRAKE & RUDDER RH	1	
		PEDAL-BRAKE & RUDDER	2	
		ATTACHING PARTS		
- 32	0411369-2	SHAFT	1	
- 33	MS24665-285	PIN-COTTER	2	
- 34	0411778-2	SHAFT	1	
- 35	MS24665-132	PIN-COTTER	2	
- 36	NAS42-6-8	SPACER	1	
		---*---		
- 37	0411564	LINK-DUAL BRAKES	3	
- 38	0411564-3	LINK-DUAL BRAKES	1	
		ATTACHING PARTS		
- 39	MS20392-2-15	PIN CESSNA STANDARD	1	
- 40	MS24665-132	PIN-COTTER	1	
- 41	NAS43-3-12	SPACER	1	
		---*---		
- 42	0411307	ARM-RUDDER BAR	2	
		ATTACHING PARTS		
- 43	AN3-11A	BOLT	1	
- 44	MS20365-1032C	NUT	1	
		---*---		
- 45	0411563	BELLCRANK ASSEMBLY	3	
- 46	0411573-1	BELLCRANK ASSEMBLY	1	
		ATTACHING PARTS		
- 47	AN3-10A	BOLT	1	
	MS20365-1032C	NUT	1	
		---*---		

A---180 SERIAL 30000 & ON
182 SERIAL 33000 & ON
B---180 SERIAL 30000 & ON
182 SERIAL 33000 THRU 34753
C---180 SERIAL 30000 THRU 32661
182 SERIAL 33000 THRU 33842
D---180 SERIAL 32662 & ON
182 SERIAL 33843 & ON
E---180 SERIAL 30000 THRU 32150
F---180 SERIAL 32151 & ON
G---182 SERIAL 33000 THRU 34753
H---182 SERIAL 34754 & ON
I---180 SERIAL 32151 & ON
182 SERIAL 33000 & ON
J---180 SERIAL 30000 THRU 50613
182 SERIAL 33000 THRU 52309

*NOTE. WHEN ORDERING THIS PART PRIOR TO 180 SERIALS 50614 OR 182 SERIALS 52310 ORDER BOTH UPPER & LOWER BEARING HALVES.
NOTE. FOR ACCESSORY KIT LISTINGS REFER TO PAGES 372 THRU 374B

This page intentionally left blank.

Cowl Flaps Control System

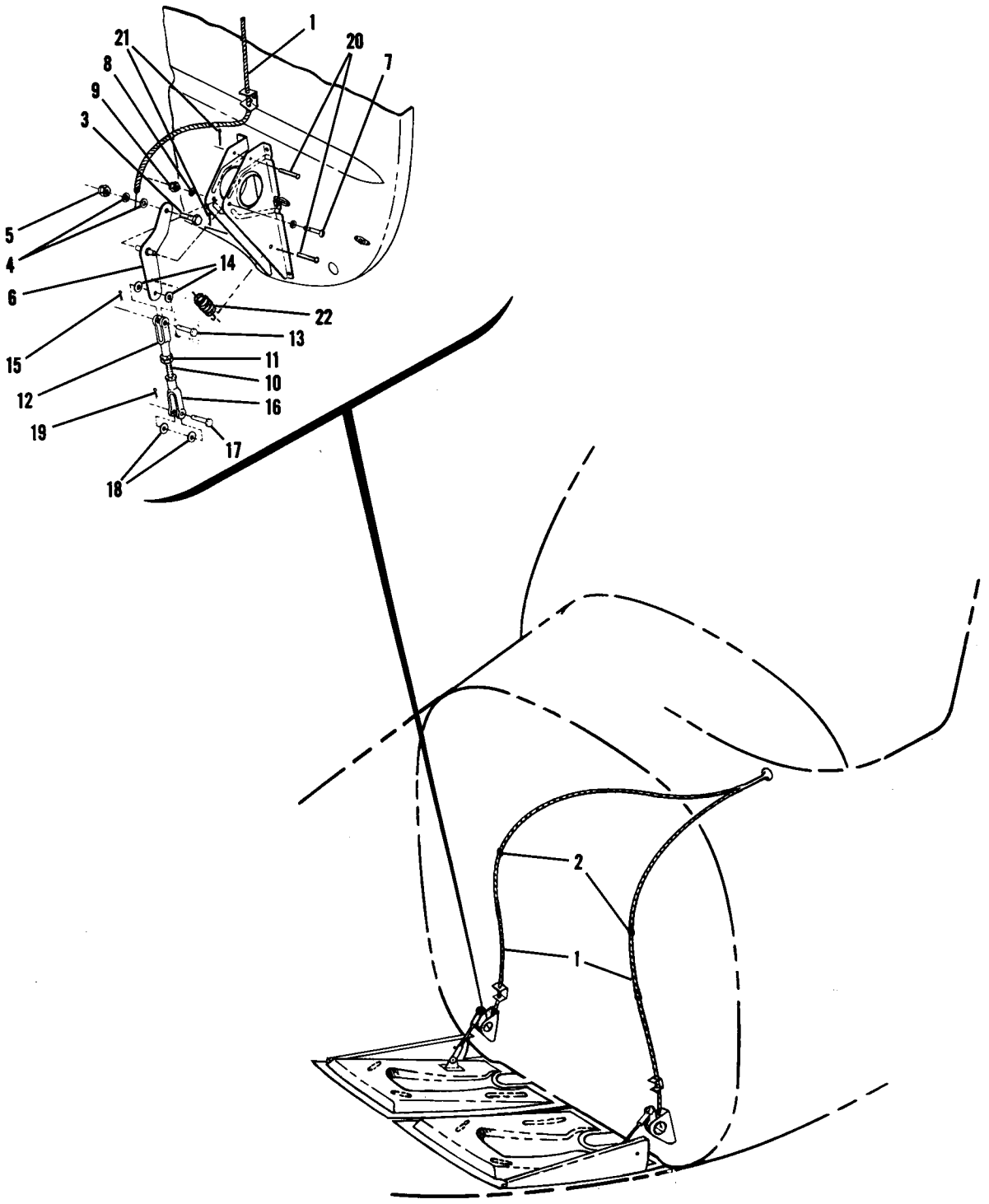

180 SERIAL 30000 THRU 50661

Figure 90. Cowl Flaps Control System Installation

FIGURE AND INDEX NO.	PART NUMBER	DESCRIPTION 1 2 3 4 5 6 7	UNITS PER ASSY	USABLE ON CODE
90-		SYSTEM INSTALLATION-COWL FLAPS CONTROL	NP	A
- 1	0713041	CONTROL-COWL FLAPS	1	B
	0713041-1	CONTROL-COWL FLAPS	1	C
		ATTACHING PARTS		
- 2	A2980A-3	CLAMP TIN	2	
	S-1021Z-8-8	SCREW CESSNA STANDARD	2	
	NAS446-4-3	NUT TIN A1778-8Z-3	2	
- 3	0450311-3	CLAMP	2	
- 4	AN960-416L	WASHER	2	
- 5	MS20365-428C	NUT	2	
		---*---		
- 6	0753000-22	BELLCRANK ASSEMBLY LH	1	
	0753000-5	BELLCRANK ASSEMBLY RH	1	
		ATTACHING PARTS		
- 7	AN23-23A	BOLT	1	
- 8	AN960-10L	WASHER	1	
- 9	MS20365-1032C	NUT	1	
		---*---		
- 10	0753007	ROD-PUSH PULL	2	
- 11	AN315-4R	NUT-LOCK	2	
- 12	AN486-2	CLEVIS-ROD END UPPER	2	
		ATTACHING PARTS		
- 13	MS20392-3-11	PIN-CLEVIS	1	
- 14	AN960-10L	WASHER	2	
- 15	MS24665-132	PIN-COTTER	1	
		---*---		
- 16	AN486-4	CLEVIS-ROD END LOWER	2	
		ATTACHING PARTS		
- 17	MS20392-2-11	PIN-CLEVIS	1	
- 18	AN960-10L	WASHER	2	
- 19	MS24665-132	PIN-COTTER	1	
		---*---		
- 20	MS20392-1-33	PIN-FLAT HEAD	2	
		ATTACHING PARTS		
- 21	MS24665-132	PIN-COTTER	1	
		---*---		
- 22	0753005	SPRING	2	

180 SERIAL 30000 THRU 50661

A---180 SERIAL 30000 THRU 50661
B---180 SERIAL 30000 THRU 50355
C---180 SERIAL 50356 THRU 50661

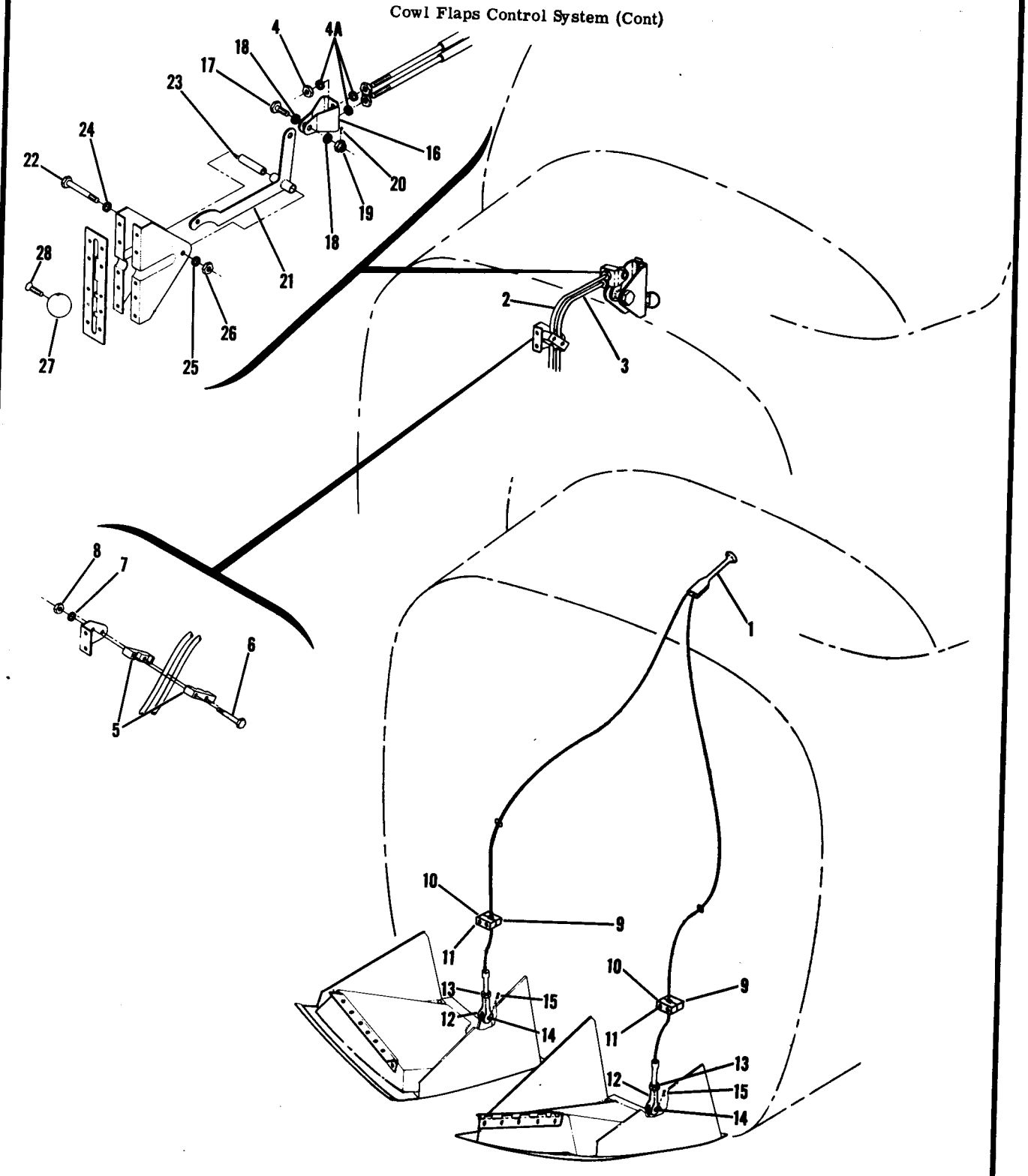

180 SERIAL 50356 & ON
182 SERIAL 51557 & ON

Figure 91. Cowl Flaps Control System Installation

FIGURE AND INDEX NO.	PART NUMBER	DESCRIPTION 1 2 3 4 5 6 7	UNITS PER ASSY	USABLE ON CODE
91-		COWL FLAPS CONTROL SYSTEM INSTALLATION	NP	A
- 1	0713306-1	CONTROL ASSEMBLY-COWL FLAPS	1	B
- 2	S-1245-1	CONTROL ASSEMBLY-COWL FLAPS	1	C
- 3	S-1245-1	CONTROL ASSEMBLY-COWL FLAPS	1	C
		ATTACHING PARTS		
- 4	AN316-4	NUT	4	C
- 4A	AN936B-416	WASHER	4	C
- 5	0713148-1	CLAMP	2	C
- 6	AN3-13A	BOLT	2	C
- 7	AN960-10L	WASHER	2	C
- 8	MS20365-1032C	NUT	2	C
		---*---		
- 9	0713307-1	MOUNT-COWL FLAP CONTROL	2	
- 10	0713307-2	CLAMP-COWL FLAP CONTROL	2	
		ATTACHING PARTS		
- 11	AN520-10R26	SCREW	2	
	AN960-10L	WASHER	2	
	MS20365-1032C	NUT	2	
		---*---		
- 12	AN665-21R	TERMINAL	2	B
	AN486-4	CLEVIS	2	C
		ATTACHING PARTS		
- 13	AN315-3R	NUT	1	B
	AN316-4	NUT	1	C
- 14	MS20392-2-13	PIN	1	
- 15	MS24665-132	PIN-COTTER	1	
	AN960-10L	WASHER	1	B
	AN960-D10	WASHER	1	C
		---*---		
- 16	0713701-2	CLEVIS	1	C
		ATTACHING PARTS		
- 17	AN4-5	BOLT	1	
- 18	AN960-416L	WASHER	2	
- 19	AN310-4	NUT	1	
- 20	MS24665-134	PIN-COTTER	1	
		---*---		
- 21	0713128-1	LEVER ASSEMBLY-COWL FLAP CONTROL	1	C
		ATTACHING PARTS		
- 22	AN3-16A	BOLT	1	
- 23	NAS43-3-88	SPACER	1	
- 24	AN960-516	WASHER	1	
- 25	AN960-10	WASHER	1	
- 26	MS20365-1032C	NUT	1	
		---*---		
- 27	S-1249-1	KNOB-LEVER ASSEMBLY CESSNA STANDARD	1	C
		ATTACHING PARTS		
- 28	AN507-1032R12	SCREW	1	
		---*---		

180 SERIAL 50356 & ON

182 SERIAL 51557 & ON

A---180 SERIAL 50356 & ON
182 SERIAL 51557 & ON
B---180 SERIAL 50356 THRU 50911
182 SERIAL 51557 THRU 53007
C---180 SERIAL 18050912 & ON
182 SERIAL 18253008 & ON

Pitot System

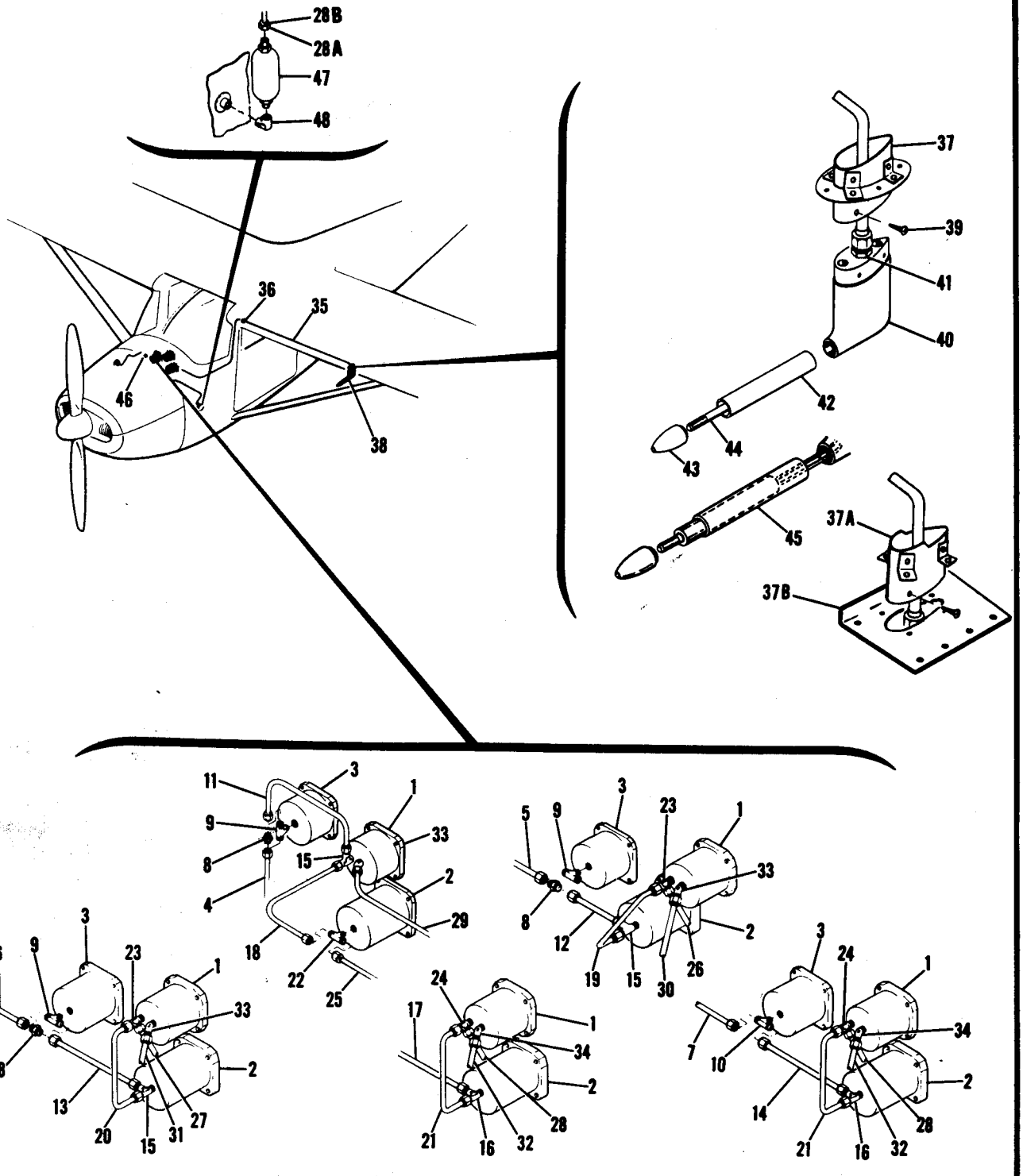

180-182 ALL SERIALS

Figure 92. Pitot System Installation

FIGURE AND INDEX NO.	PART NUMBER		DESCRIPTION 1 2 3 4 5 6 7	UNITS PER ASSY	USABLE ON CODE
92-			SYSTEM INSTALLATION-PITOT	NP	
- 1	0411086-13		INDICATOR-AIRSPEED	1	A
			ATTACHING PARTS		
	AN515B6R12		SCREW	4	
	MS20365B632C		NUT	4	
			---*---		
	0411086-16		INDICATOR-AIRSPEED WHEN EXHAUSTED USE S-1324N3	1	B
	S-1324N3		INDICATOR-AIRSPEED	1	B
			ATTACHING PARTS		
	AN515B6R12		SCREW	4	
	MS20365B632C		NUT	4	
			---*---		
- 2	0411007-7		ALTIMETER WHEN EXHAUSTED USE S-1314N1	1	
	S-1314N1		ALTIMETER	1	
			ATTACHING PARTS		
	AN515B6R12		SCREW	3	
	MS20365B632C		NUT	3	
			---*---		
	0411007-8	*	ALTIMETER-SENSITIVE WHEN EXHAUSTED USE S-1313N1	1	
	0411007-10		ALTIMETER-SENSITIVE WHEN EXHAUSTED USE S-1313N1	1	
	S-1313N1		ALTIMETER - SENSITIVE	1	
			ATTACHING PARTS		
	AN515B6R12		SCREW	3	
	MS20365B632C		NUT	3	
			---*---		
- 3	0411069-1	*	INDICATOR-VERTICAL SPEED WHEN EXHAUSTED USE S-1304N2	1	
	S-1304N2		INDICATOR-VERTICAL SPEED	1	
			ATTACHING PARTS		
	AN515B6R12		SCREW	4	
	MS20365B632C		NUT	4	
			---*---		
- 4	0500106-90		LINE ASSEMBLY-RIGHT STATIC SOURCE TO UNION	1	A
- 5	0500106-214		LINE ASSEMBLY-RIGHT STATIC SOURCE TO UNION	1	C
- 6	0500106-257		LINE ASSEMBLY-RIGHT STATIC SOURCE TO UNION	1	G
	0500106-290		LINE ASSEMBLY-RIGHT STATIC SOURCE TO UNION	1	J
- 7		*	LINE ASSEMBLY-RIGHT STATIC SOURCE TO TEE	1	H
			ATTACHING PARTS		
- 8	AN815-4D		UNION	1	K
- 9	AN825-4D	*	TEE	1	K
- 10	S-1138-1		TEE-NYLON	1	J
	S-1130-1		NUT	2	
			---*---		
	S-1071-1		TUBE-POLYETHYLENE 36 IN. LONG-----BULK ITEM	AR	H
			REF S-1071-1-36 CESSNA STANDARD		
	S-1131-1		INSERT-NYLON	2	H
- 11	0500106-108		LINE ASSEMBLY-UNION TO AIRSPEED INDICATOR	1	A
- 12	0500106-216		LINE ASSEMBLY-UNION TO ALTIMETER	1	C
- 13	0500106-258		LINE ASSEMBLY-UNION TO ALTIMETER	1	G
	0500106-291		LINE ASSEMBLY-UNION TO ALTIMETER	1	J
- 14		*	LINE ASSEMBLY-TEE TO ALTIMETER	1	H
			ATTACHING PARTS		
- 15	AN826-4D		TEE	1	
- 16	S-1139-1		TEE-NYLON	1	
	S-1130-1		NUT	2	
			---*---		
	S-1071-1		TUBE-POLYETHYLENE 9 IN. LONG BULK ITEM	AR	H
			REF S-1071-1-9 CESSNA STANDARD		
	S-1131-1		INSERT-NYLON	2	H
- 17			LINE ASSEMBLY-RIGHT STATIC SOURCE TO ALTIMETER	1	H
	S-1071-1		TUBE-POLYETHYLENE 67 IN. LONG-----BULK ITEM	AR	H
			REF S-1071-1-67 CESSNA STANDARD		
	S-1131-1		INSERT-NYLON	2	H
- 18	0500106-93		LINE ASSEMBLY-AIRSPEED INDICATOR TO ALTIMETER	1	A
- 19	0500106-215		LINE ASSEMBLY-AIRSPEED INDICATOR TO ALTIMETER	1	C
- 20	0500106-277		LINE ASSEMBLY-AIRSPEED INDICATOR TO ALTIMETER	1	F
- 21			LINE ASSEMBLY-AIRSPEED INDICATOR TO ALTIMETER	1	H
			ATTACHING PARTS		
	AN815-4D		UNION	1	A
- 22	AN825-4D		TEE	1	A
- 23	AN826-4D		TEE	1	L
- 24	S-1139-1		TEE-NYLON	1	H
	S-1130-1		NUT	2	
			---*---		

180-182 ALL SERIALS

S-NOS APPEARING ON THIS PAGE ARE CESSNA STANDARD

CONTINUED ON PAGE 254

FIGURE AND INDEX NO.	PART NUMBER	DESCRIPTION 1 2 3 4 5 6 7	UNITS PER ASSY	USABLE ON CODE
92-	S-1071-1	TUBE-POLYETHYLENE 7.5 IN. LONG BULK ITEM REF S-1071-1-7.5 CESSNA STANDARD	AR	H
	S-1131-1	INSERT-NYLON	2	H
- 25	0500106-95	LINE ASSEMBLY-ALTIMETER TO LEFT STATIC SOURCE	1	A
- 26	0500106-213	LINE ASSEMBLY-AIRSPEED INDICATOR TO LEFT STATIC SOURCE	1	C
- 27	0500106-253	LINE ASSEMBLY-AIRSPEED INDICATOR TO LEFT STATIC SOURCE	1	F
- 28		LINE ASSEMBLY-AIRSPEED INDICATOR TO LEFT STATIC SOURCE	1	H
	S-1071-1	TUBE-POLYETHYLENE 19 IN. LONG-----BULK ITEM REF S-1071-1-19.0 CESSNA STANDARD	AR	H
-28A	S-1131-1	INSERT	1	H
-28B	S-1130-1	NUT	1	H
	S-1131-1	INSERT-NYLON	2	H
- 29	0500106-94	LINE ASSEMBLY-AIRSPEED INDICATOR TO UNION IN WING	1	A
- 30	0500106-217	LINE ASSEMBLY-AIRSPEED INDICATOR TO UNION IN WING	1	C
- 31	0500106-252	LINE ASSEMBLY-AIRSPEED INDICATOR TO UNION IN WING	1	F
- 32		LINE ASSEMBLY-AIRSPEED INDICATOR TO UNION IN WING	1	H
		ATTACHING PARTS		
- 33	AN823-4D	ELBOW	1	K
- 34	S-1135-1	ELBOW-NYLON	1	H
	S-1130-1	NUT	1	
		---*---		
	S-1071-1	TUBE-POLYETHYLENE 38 IN. LG. BULK ITEM REF S-1071-1-38	AR	H
	S-1131-1	INSERT-NYLON	2	H
- 35	0500106-119	LINE ASSEMBLY-UNION IN WING TO PITOT TUBE	1	K
		LINE ASSEMBLY-UNION IN WING TO PITOT TUBE	1	H
		ATTACHING PARTS		
- 36	AN815-4D	UNION	1	K
	S-1132-1	UNION-NYLON	1	H
	S-1130-1	NUT	2	
		---*---		
	S-1071-1	TUBE-POLYETHYLENE 52 IN. LG. BULK ITEM REF S-1071-1-52	AR	H
	S-1131-1	INSERT-NYLON	2	H
- 37	0721101	CONNECTOR ASSEMBLY-PITOT TUBE	1	M
-37A	0721115-1	CONNECTOR ASSEMBLY-PITOT TUBE	1	N
-37B	0721114-1	DOUBLER	1	N
- 38	0721105-1	TUBE ASSEMBLY-L SHAPED PITOT	1	K
	0721105-10	TUBE ASSEMBLY-L SHAPED PITOT	1	H
		ATTACHING PARTS		
- 39	AN507-640R4	SCREW	4	
		---*---		
- 40	0721105-7	BODY-PITOT TUBE	1	
- 41	AN816-4-4D	NIPPLE	1	K
	S-1133-1	CONNECTOR-NYLON	1	H
	S-1130-1	NUT	1	
- 42	0721105-3	TUBE-PITOT	1	
- 43	0721105-4	NOSE FITTING-PITOT TUBE	1	
- 44	0721105-8	STEM-PITOT TUBE	1	
		INSTALLATION-HEATED PITOT	NP	
- 45	0721105-5	HEATER ASSEMBLY-PITOT HECA A357-3	1	
- 46	0713026-4	SWITCH-PITOT HEATER	1	
	0411092-1	KNOB	1	E
	0713303-2	KNOB	1	D
- 47	S-1258-1	SUMP ASSEMBLY-PITOT STATIC SOURCE	1	H
		ATTACHING PARTS		
- 48	AN914-1D	ELBOW	1	
		---*---		

A---180 SERIAL 30000 THRU 32661
182 SERIAL 33000 THRU 33842
B---180 SERIAL 32662 & ON
182 SERIAL 33843 & ON
C---180 SERIAL 32662 THRU 50355
182 SERIAL 33843 THRU 51556
D---180 SERIAL 50356 & ON
182 SERIAL 51557 & ON

S-NOS APPEARING ON THIS PAGE ARE CESSNA STANDARD

CONTINUED ON PAGE 254A

FIGURE AND INDEX NO.	PART NUMBER	DESCRIPTION 1 2 3 4 5 6 7	UNITS PER ASSY	USABLE ON CODE
92-		E---180 SERIAL 30000 THRU 50355 182 SERIAL 33000 THRU 51556 F---180 SERIAL 50356 THRU 50675, 50677 THRU 50701 182 SERIAL 51557 THRU 52446, 52448 THRU 52522 G---180 SERIAL 50356 THRU 50661 182 SERIAL 51557 THRU 52358 H---180 SERIAL 50676, 50702 & ON 182 SERIAL 52447, 52523 & ON J---180 SERIAL 50662 THRU 50675, 50677 THRU 50701 182 SERIAL 52359 THRU 52446, 52448 THRU 52522 K---180 SERIAL 30000 THRU 50675, 50677 THRU 50701 182 SERIAL 33000 THRU 52446, 52448 THRU 52522 L---180 SERIAL 32662 THRU 50675, 50677 THRU 50701 182 SERIAL 33843 THRU 52446, 52448 THRU 52522 M---180 SERIAL 30000 THRU 50784 182 SERIAL 33000 THRU 52795 N---180 SERIAL 50785 & ON 182 SERIAL 52796 & ON *NOTE. USED ON THESE AIRPLANES WHEN VERTICAL SPEED INDICATOR IS INSTALLED. NOTE. FOR ACCESSORY KIT LISTINGS REFER TO PAGES 372 THRU 374B		

This page intentionally left blank.

FIGURE AND INDEX NO.	PART NUMBER	DESCRIPTION 1 2 3 4 5 6 7	UNITS PER ASSY	USABLE ON CODE
93- -		ENGINE DRIVEN VACUUM SYSTEM INSTALLATION	NP	A
- 1	0713200-27	PANEL-GYRO COVER	1	
- 2	0750104-3	PUMP-VACUUM	1	
- 3	0750103-1	SEPARATOR-OIL	1	
		ATTACHING PARTS		
- 4	0750100-11	BRACKET	1	
- 5	AN3-15A	BOLT	2	
	AN960D10L	WASHER	2	
	MS20365-1032C	NUT	2	
		---*---		
- 6	0813619-3	VALVE	1	
		ATTACHING PARTS		
- 7	AN911-3D	NIPPLE	1	
- 8	AN914-3D	ELBOW	1	
		---*---		
- 9	0311057-1	GAGE-SUCTION WHEN EXHAUSTED USE S-1300N1	1	
	S-1300N1	GAGE-SUCTION	1	
		ATTACHING PARTS		
- 10	AN515B6R14	SCREW	4	
		---*---		
- 11	S-51-8	HOSE-OIL RETURN-9.00 IN. LG. BULK ITEM REF S-51-8-36	1	
		ATTACHING PARTS		
- 12	AN844-8	ELBOW	1	
- 13	NAS397-14-1	CLAMP TIN A3122-14-1	2	
		---*---		
- 14	0750100-12	LINE-OIL RETURN	1	
- 15	S-51-8	HOSE-VENT 2.00 IN. LG.---- BULK ITEM-----REF S-51-8-8	1	
		ATTACHING PARTS		
- 16	NAS397-14-1	CLAMP TIN A3122-14-1	2	
		---*---		
- 17	0500106-101	LINE-VENT	1	B
	0500106-251	LINE-VENT	1	C
		ATTACHING PARTS		
- 18	AN742-8	CLAMP	2	
- 19	A2982-12-27	CLAMP TIN	1	
	S-1021Z-8-8	SCREW CESSNA STANDARD	1	
- 20	A2981A-8-27	CLAMP TIN	1	
- 21	S-1021Z-8-6	SCREW CESSNA STANDARD	1	
- 22	A3047A-12-92	CLAMP TIN	1	
- 23	A3047A-8-92	CLAMP TIN	1	
- 24	S-1021Z-10-8	SCREW CESSNA STANDARD	1	
		---*---	1	
- 25	S-51-8	HOSE-DISCHARGE 3.25 IN. LG. BULK ITEM	1	
		REF S-51-8-13		
		ATTACHING PARTS		
- 26	AN842-8	ELBOW	1	
- 27	NAS397-14-1	CLAMP TIN A3122-14-1	2	
		---*---		
- 28	S-1168-6-12	HOSE-SUCTION VALVE TO FIREWALL	1	
		ATTACHING PARTS		
- 29	MS20822-6-6B	ELBOW	1	
		---*---		
- 30	S-1168-6-12	HOSE-SUCTION FIREWALL TO HORIZONTAL GYRO	1	
		ATTACHING PARTS		
- 31	AN833-6D	ELBOW	1	
- 32	AN960D916	WASHER	2	
- 33	AN924-6D	NUT	1	
		---*---		
- 34	S-1168-6-14	HOSE-DIRECTIONAL GYRO TO HORIZONTAL GYRO	1	
		ATTACHING PARTS		
- 35	AN826-6D	TEE	1	
- 36	MS20822-6D	ELBOW	1	
		---*---		
- 37	0500106-98	LINE-HORIZONTAL GYRO TO SUCTION GAGE	1	
		ATTACHING PARTS		
- 38	AN816-4-4D	NIPPLE	1	
- 39	AN823-4D	ELBOW	1	
		---*---		
	MS20913-2D	PLUG	1	
		INSTALLATION-SELECTOR VALVE	NP	C
- 40	0813577-7	VALVE ASSEMBLY-SELECTOR	1	
		ATTACHING PARTS		
- 41	0813514-6	BRACKET ASSEMBLY	1	
- 42	AN515-6-16	SCREW	4	
		---*---		
	AN816-2D	NIPPLE	1	

S-NOS APPEARING ON THIS PAGE ARE CESSNA STANDARD

CONTINUED ON PAGES 256 & 257

180 SERIAL 30000 THRU 32661

182 SERIAL 33000 THRU 33842

Vacuum System

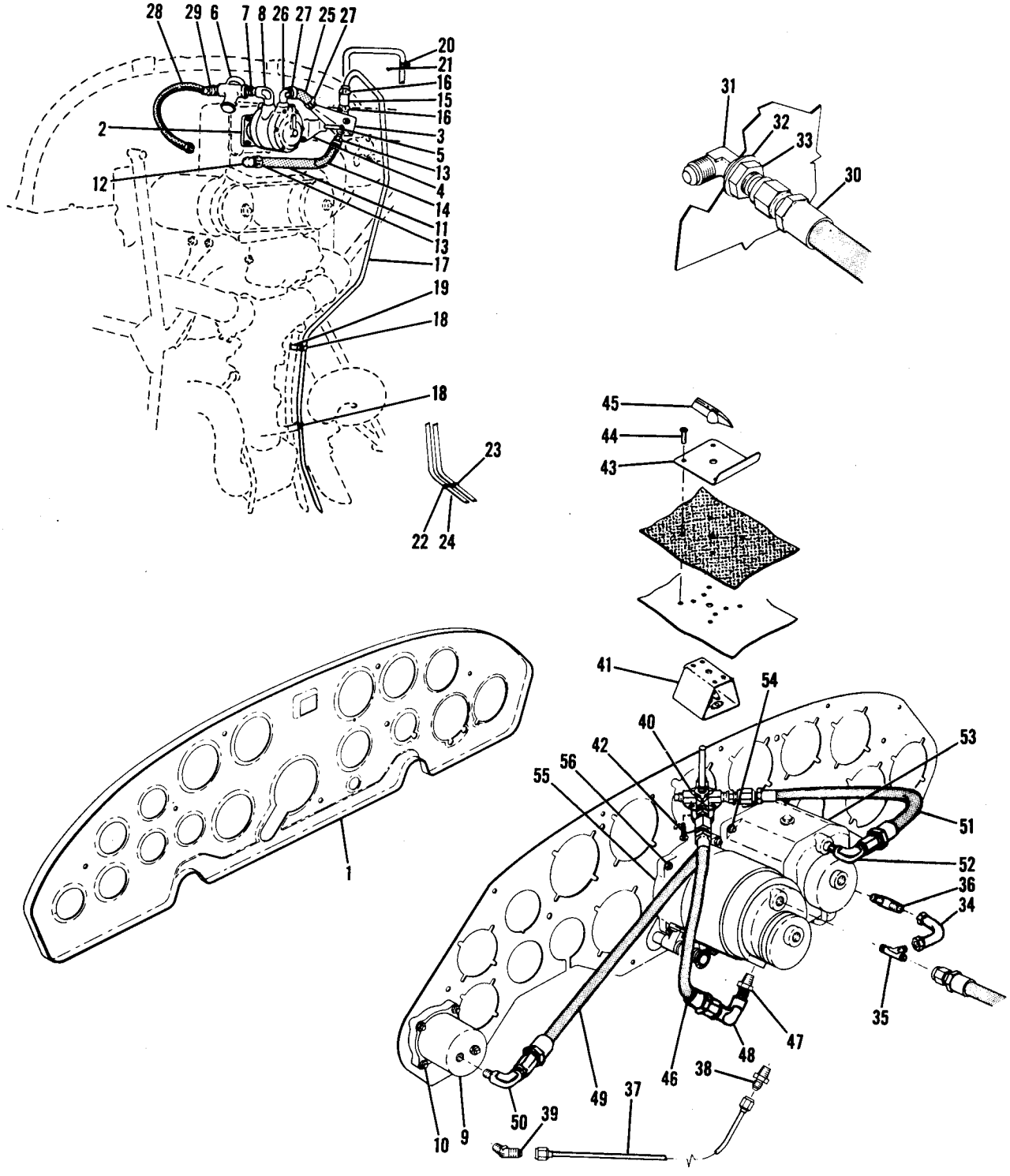

180 SERIAL 30000 THRU 32661
182 SERIAL 33000 THRU 33842

Figure 93. Vacuum System Installation

FIGURE AND INDEX NO.	PART NUMBER	DESCRIPTION 1 2 3 4 5 6 7	UNITS PER ASSY	USABLE ON CODE
93-	MS20822-2D	ELBOW	2	
	MS20913-1D	PLUG	2	
	0813514-5	RETAINER	1	
- 43	0700310-1	PLACARD	1	
		ATTACHING PARTS		
- 44	S-1021Z-6-4	SCREW CESSNA STANDARD	4	
		---*---		
- 45	0713498	KNOB	1	
- 46	S-1168-2-10	HOSE ASSEMBLY-HORIZONTAL GYRO TO SELECTOR VALVE	1	
		ATTACHING PARTS		
- 47	AN912-1D	BUSHING-REDUCER	1	
- 48	MS20822-2D	ELBOW	1	
		---*---		
- 49	S-1168-2-18	HOSE ASSEMBLY-SUCTION GAGE TO SELECTOR VALVE	1	
		ATTACHING PARTS		
- 50	MS20822-2D	ELBOW	1	
		---*---		
- 51	S-1168-2-10	HOSE ASSEMBLY-DIRECTIONAL GYRO TO SELECTOR VALVE	1	
		ATTACHING PARTS		
- 52	AN912-1D	BUSHING-REDUCER	1	
	MS20822-2D	ELBOW	1	
		---*---		
- 53	0311056-5	GYRO-DIRECTIONAL	1	
		ATTACHING PARTS		
- 54	AN520-10R7	SCREW	4	
		---*---		
- 55	0311058-1	GYRO-HORIZONTAL	1	
		ATTACHING PARTS		
- 56	AN520-10R7	SCREW	4	
		---*---		

A---180 SERIAL 30000 THRU 32661
182 SERIAL 33000 THRU 33842
B---180 SERIAL 30000 THRU 32661
C---182 SERIAL 33000 THRU 33842
NOTE. FOR ACCESSORY KIT LISTINGS REFER TO PAGES 372 THRU 374B
S-NOS APPEARING ON THIS PAGE ARE CESSNA STANDARD

FIGURE AND INDEX NO.	PART NUMBER	DESCRIPTION 1 2 3 4 5 6 7	UNITS PER ASSY	USABLE ON CODE
94-		VACUUM SYSTEM-ENGINE DRIVEN	NP	A
- 1	0750104-3	PUMP-VACUUM	1	
- 2	0750103-1	SEPARATOR-OIL	1	
		ATTACHING PARTS		
- 3	0750100-11	BRACKET	1	
- 4	AN3-15A	BOLT	2	
	AN960D10L	WASHER	2	
	MS20365-1032C	NUT	2	
		---*---		
- 5	0813619-3	VALVE	1	
		ATTACHING PARTS		
- 6	AN911-3D	NIPPLE	1	
- 7	AN914-3D	ELBOW	1	
		---*---		
- 8	0311057-1	GAGE-SUCTION WHEN EXHAUSTED USE S-1300N1	1	
	S-1300N1	GAGE-SUCTION	1	
		ATTACHING PARTS		
- 9	AN507B632R12	SCREW	4	
		---*---		
		ENGINE DRIVEN VACUUM SYSTEM INSTALLATION HARDWARE ONLY	NP	
- 10	S-51-8	HOSE-OIL RETURN 9.00 IN. LG. BULK ITEM	1	
		REF S-51-8-36		
		ATTACHING PARTS		
- 11	AN844-8	ELBOW	1	
- 12	NAS397-14-1	CLAMP TIN A3122-14-1	2	
		---*---		

S-NOS APPEARING ON THIS PAGE ARE CESSNA STANDARD
CONTINUED ON PAGES 258, 259, & 260

180 SERIAL 32662 THRU 50105
182 SERIAL 33843 THRU 34753

Vacuum System (Cont)

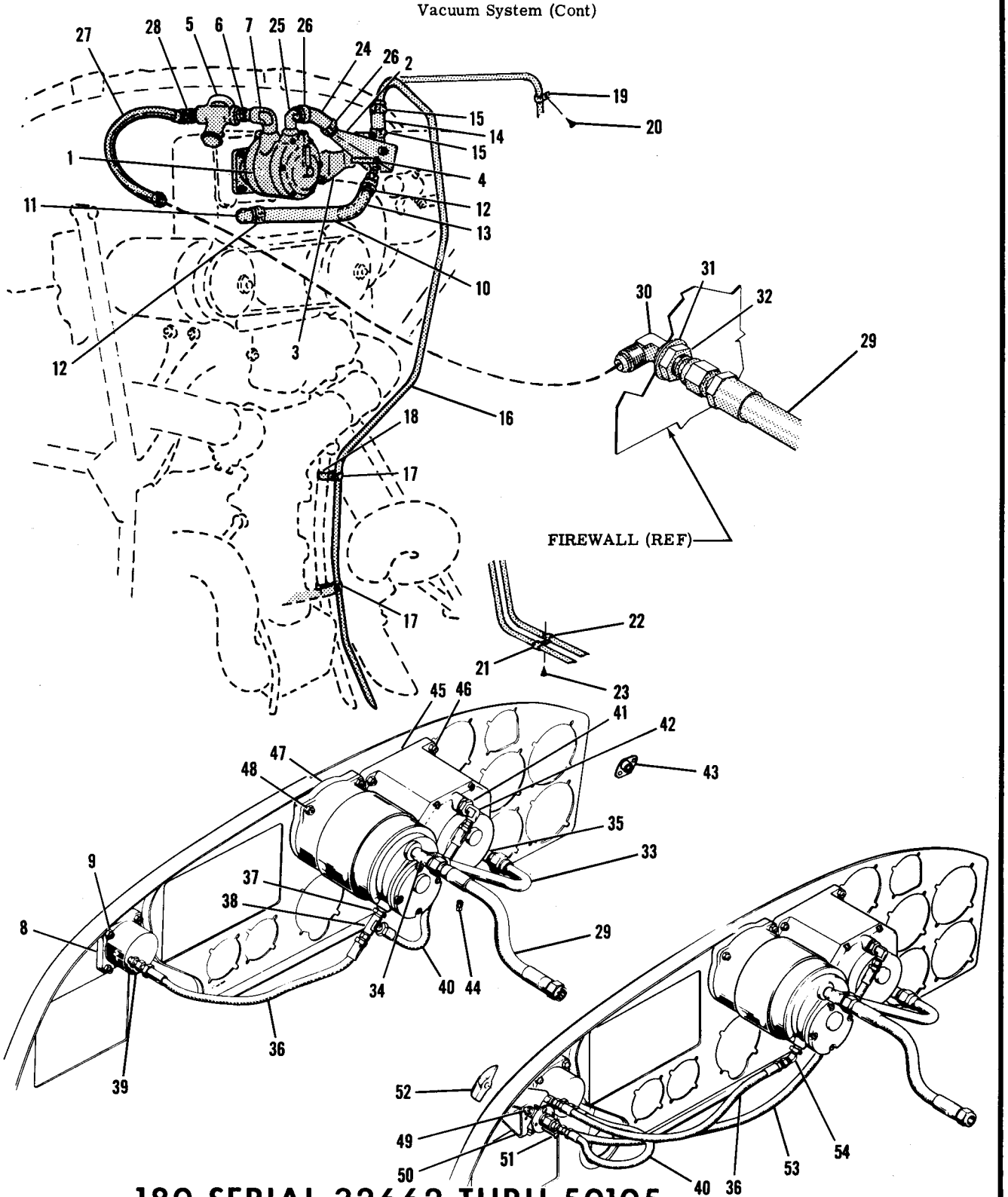

180 SERIAL 32662 THRU 50105
182 SERIAL 33843 THRU 34753

Figure 94. Vacuum System Installation

FIGURE AND INDEX NO.	PART NUMBER	DESCRIPTION 1 2 3 4 5 6 7	UNITS PER ASSY	USABLE ON CODE
94- 13	0750100-12	LINE-OIL RETURN	1	
- 14	S-51-8	HOSE-VENT-----2.00 IN. LG. BULK ITEM REF S-51-8-8	1	
		ATTACHING PARTS		
- 15	NAS397-14-1	CLAMP TIN A3122-14-1	2	
		---*---		
- 16	0500106-101	LINE-VENT	1	B
	0500106-251	LINE-VENT	1	C
		ATTACHING PARTS		
- 17	AN742-8	CLAMP	2	
- 18	A2982-12-27	CLAMP TIN	1	
	S-1021Z-10-8	SCREW CESSNA STANDARD	1	
- 19	A2981A-8-27	CLAMP TIN	1	
- 20	S-1021Z-8-6	SCREW CESSNA STANDARD	1	
- 21	A3047A-12-92	CLAMP TIN	1	
- 22	A3046A-8-92	CLAMP TIN	1	
- 23	S-1021Z-10-8	SCREW CESSNA STANDARD	1	
		---*---		
- 24	S-51-8	HOSE-DISCHARGE-----3.25 IN. LG. BULK ITEM	1	
		REF S-51-8-13		
		ATTACHING PARTS		
- 25	AN842-8	ELBOW	1	
- 26	NAS397-14-1	CLAMP TIN A3122-14-1	2	
		---*---		
- 27	S-1168-6-12	HOSE-SUCTION VALVE TO FIREWALL	1	
		ATTACHING PARTS		
- 28	MS20822-6-6B	ELBOW	1	
		---*---		
- 29	S-1168-6-12	HOSE-SUCTION FIREWALL TO HORIZONTAL GYRO	1	
		ATTACHING PARTS		
- 30	AN833-6D	ELBOW	1	
- 31	AN960D916	WASHER	2	
- 32	AN924-6D	NUT	1	
		---*---		
- 33	0500106-221	LINE-DIRECTION GYRO TO HORIZONTAL GYRO	1	
		ATTACHING PARTS		
- 34	AN826-6D	TEE	1	
- 35	MS20822-6D	ELBOW	1	
		---*---		

S-NOS APPEARING ON THIS PAGE ARE CESSNA STANDARD

CONTINUED ON PAGE 260

FIGURE AND INDEX NO.	PART NUMBER	DESCRIPTION 1 2 3 4 5 6 7	UNITS PER ASSY	USABLE ON CODE
94- 36	S-1168-2-15	HOSE-HORIZONTAL GYRO TO SUCTION GAGE ATTACHING PARTS	1	
- 37	AN912-1D	BUSHING-REDUCER	1	
- 38	AN826-2D	TEE	1	
- 39	AN816-2D	NIPPLE	1	
		---*---		
- 40	S-1168-2-10	HOSE-DIRECTIONAL GYRO TO SUCTION GAGE ATTACHING PARTS	1	
- 41	AN912-1D	BUSHING-REDUCER	1	
- 42	MS20822-2D	ELBOW	1	
		---*---		
	AN960D10	WASHER	2	
- 43	102PLDN-8	SHOCK MOUNT LO	3	
- 44	MS20913-2D	PLUG	3	
- 45	0311056-5	DIRECTIONAL GYRO	1	
		ATTACHING PARTS		
- 46	AN520B10R16	SCREW	4	
		---*---		
- 47	0311058-1	HORIZONTAL GYRO	1	
		ATTACHING PARTS		
- 48	AN520B10R16	SCREW	4	
		---*---		
- 49	0813577-7	INSTALLATION-SELECTOR VALVE	NP	C
		VALVE ASSEMBLY-SELECTOR	1	
		ATTACHING PARTS		
- 50	0813514-6	BRACKET	1	
- 51	AN515-6-16	SCREW	4	
		---*---		
	AN816-2D	NIPPLE	1	
	MS20822-2D	ELBOW	2	
	MS20913-1D	PLUG	2	
	0813514-5	RETAINER	1	
- 52	0713498	KNOB	1	
- 53	S-1168-2-23	HOSE ASSEMBLY-DIRECTIONAL GYRO TO SELECTOR VALVE	1	
- 54	AN823-2D	ELBOW	1	

A---180 SERIAL 32662 THRU 50105
182 SERIAL 33843 THRU 34753
B---180 SERIAL 32662 THRU 50105
C---182 SERIAL 33843 THRU 34753
NOTE. FOR ACCESSORY KIT LISTINGS REFER TO PAGES 372 THRU 374B
S-NOS APPEARING ON THIS PAGE ARE CESSNA STANDARD

FIGURE AND INDEX NO.	PART NUMBER	DESCRIPTION 1 2 3 4 5 6 7	UNITS PER ASSY	USABLE ON CODE
95-		VACUUM SYSTEM INSTALLATION-ENGINE DRIVEN	NP	N
- 1	0750104-3	PUMP-VACUUM	1	
- 2	0750103-1	SEPARATOR-OIL	1	
		ATTACHING PARTS		
- 3	0750100-11	BRACKET	1	
- 4	AN3-15A	BOLT **180 SERIAL 50106 & ON**	2	
	AN960D10L	WASHER	2	
	MS20365-1032C	NUT **182 SERIAL 34754 & ON**	2	
		---*---		
- 5	0813619-3	VALVE	1	
		ATTACHING PARTS		
- 6	AN911-3D	NIPPLE	1	L
	AN911-3	NIPPLE	1	M
- 7	AN914-3D	ELBOW	1	J
	AN914-3	ELBOW	1	K
		---*---		
- 8	0311057-1	GAGE-SUCTION WHEN EXHAUSTED USE S-1300N1	1	
- 1	S-1300N1	GAGE-SUCTION	1	
		ATTACHING PARTS		
- 9	AN507B632R12	SCREW	4	
		---*---		
- 10	S-51-8	HOSE-OIL RETURN 9.00 IN. LG. BULK ITEM REF S-51-8-36	1	
		ATTACHING PARTS		
- 11	AN844-8	ELBOW	1	
- 12	NAS397-14-1	CLAMP TIN A3122-14-1	2	
		---*---		
- 13	0750100-12	LINE-OIL RETURN	1	
- 14	S-51-8	HOSE-VENT 2.00 IN. LG.---- BULK ITEM-----REF S-51-8-8	1	
		ATTACHING PARTS		
- 15	NAS397-14-1	CLAMP TIN A3122-14-1	2	
		---*---		
- 16	0500106-101	LINE-VENT	1	A
	0500106-251	LINE-VENT	1	B
		ATTACHING PARTS		
- 17	A2981A-8-27	CLAMP TIN	1	G
-17A	S-1021Z-10-6	SCREW CESSNA STANDARD	1	G
- 18	AN742D8	CLAMP	1	F
-18A	0761202-3	LINK	1	F
	S-1021Z-10-10	SCREW	1	F
- 19	AN742D8	CLAMP	1	E
-19A	AN2982A-12-27	CLAMP TIN	1	E
-19B	S-1021Z-10-8	SCREW CESSNA STANDARD	1	E
- 20	A2981A-8-27	CLAMP TIN	1	E
	AN742D8	CLAMP	1	H
-20A	A2980A-12-27	CLAMP TIN	1	
	S-1021Z-10-8	SCREW CESSNA STANDARD	1	
- 21	A3047A-12-92	CLAMP TIN	1	G
- 22	MS21919DG8	CLAMP	1	G
- 23	S-1021Z-10-10	SCREW CESSNA STANDARD	1	G
		---*---		
- 24	S-51-8	HOSE-DISCHARGE 3.25 IN. LG. BULK ITEM REF S-51-8-13	1	
		ATTACHING PARTS		
- 25	AN842-8	ELBOW	1	
- 26	NAS397-14-1	CLAMP TIN A3122-14-1	2	
		---*---		
- 27	S-1168-6-12	HOSE-SUCTION VALVE TO FIREWALL	1	E
	S-1168-6-7	HOSE-SUCTION VALVE TO FIREWALL	1	R
		ATTACHING PARTS		
- 28	MS20822-6-6B	ELBOW	1	R
		---*---		
- 29	S-1168-6-12	HOSE-SUCTION FIREWALL TO HORIZONTAL GYRO	1	
		ATTACHING PARTS		
- 30	AN833-6D	ELBOW	1	C
	AN832-6D	UNION	1	Q
- 31	AN960D916	WASHER	2	P
- 32	AN924-6D	NUT	1	P
		---*---		
- 33	0500106-221	LINE-DIRECTION GYRO TO HORIZONTAL GYRO	1	
		ATTACHING PARTS		
- 34	AN826-6D	TEE	1	
- 35	MS20822-6D	ELBOW	1	
-35A	AN816-6D	NIPPLE	1	C
		---*---		

S-NOS APPEARING ON THIS PAGE ARE CESSNA STANDARD

CONTINUED ON PAGES 262 & 263

Vacuum System (Cont)

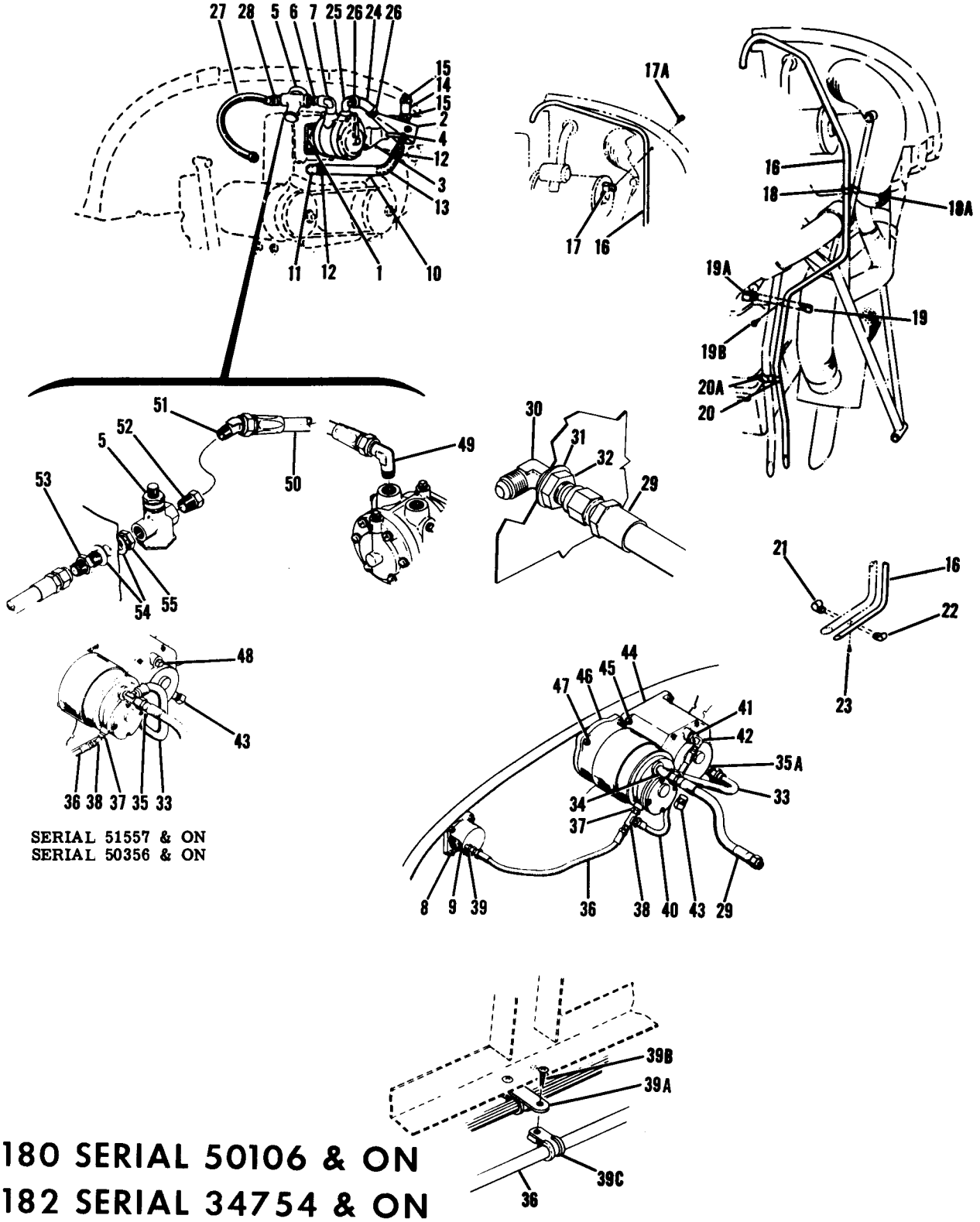

SERIAL 51557 & ON
SERIAL 50356 & ON

180 SERIAL 50106 & ON
182 SERIAL 34754 & ON

Figure 95. Vacuum System Installation

FIGURE AND INDEX NO.	PART NUMBER	DESCRIPTION 1 2 3 4 5 6 7	UNITS PER ASSY	USABLE ON CODE
95- 36	S-1168-2-15	HOSE-HORIZONTAL GYRO TO SUCTION GAGE	1	C
	S-1168-2-15	HOSE-HORIZONTAL GYRO TO SUCTION GAGE	1	D
		ATTACHING PARTS		
- 37	AN912-1D	BUSHING-REDUCER	1	
- 38	AN823-2D	ELBOW	1	D
-38A	AN826-2D	TEE	1	C
- 39	AN816-2D	NIPPLE	1	
-39A	1260043-2	STRAP	1	
-39B	S-1021Z-8-8	SCREW	1	
-39C	NAS435-6D	CLAMP	1	
		---*---		
- 40	S-1168-2-10	HOSE-DIRECTIONAL GYRO TO SUCTION GAGE	1	C
- 41	AN912-1D	BUSHING-REDUCER	1	C
- 42	MS20822-2D	ELBOW	1	C
	AN960D10	WASHER	2	
- 43	MS20913-2D	PLUG	2	
- 44	0311056-5	DIRECTIONAL GYRO-NEW	1	
		ATTACHING PARTS		
- 45	AN520B10R16	SCREW	4	
		---*---		
- 46	0311058-4	HORIZONTAL GYRO-NEW	1	
		ATTACHING PARTS		
- 47	AN520B10R16	SCREW	4	
		---*---		
	0311056-4	GYRO-DIRECTIONAL-REBUILT WHEN EXHAUSTED USE S-1316N1	1	
	S-1316N1	GYRO-DIRECTIONAL-REBUILT	1	
		ATTACHING PARTS		
	AN520B10R16	SCREW	4	
		---*---		
	0311058-5	GYRO-HORIZONTAL-REBUILT WHEN EXHAUSTED USE S-1309N1	1	
	S-1309N1	GYRO-HORIZONTAL-REBUILT	1	
		ATTACHING PARTS		
	AN520B10R16	SCREW	4	
		---*---		
- 48	MS20913-2D	PLUG	1	D
- 49	MS20822-6-6B	ELBOW	1	S
- 50	S-1168-6-61/2	HOSE ASSEMBLY	1	S
		ATTACHING PARTS		
- 51	AN912-2	BUSHING-REDUCER	1	S
- 52	AN823-6B	ELBOW	1	S
		---*---		
- 53	0550177-1	FITTING	1	S
- 54	AN960D916	WASHER	2	S
- 55	AN924-6D	NUT	1	S

A---180 SERIAL 50106 THRU 50661
B---180 SERIAL 50662 & ON
182 SERIAL 34754 & ON
C---180 SERIAL 50106 THRU 50355
182 SERIAL 34754 THRU 51556
D---180 SERIAL 50356 & ON
182 SERIAL 51557 & ON
E---180 SERIAL 50106 THRU 50661
182 SERIAL 34754 THRU 52358
F---180 SERIAL 50106 & ON
182 SERIAL 52359 & ON
G---182 SERIAL 34754 THRU 52358
H---180 SERIAL 50662 & ON
182 SERIAL 52359 & ON
J---180 SERIAL 50106 THRU 50817
182 SERIAL 34754 THRU 52841
K---180 SERIAL 50818 THRU 18051110
182 SERIAL 52842 & ON
L---180 SERIAL 50106 THRU 50821
182 SERIAL 34754 THRU 52851
M---180 SERIAL 50822 THRU 18051110
182 SERIAL 52852 & ON
N---180 SERIAL 50106 & ON
182 SERIAL 34754 & ON
P---180 SERIAL 50106 THRU 18051110
182 SERIAL 34754 & ON
Q---180 SERIAL 50356 THRU 18051110
182 SERIAL 51557 & ON
R---180 SERIAL 50662 THRU 18051110
182 SERIAL 52359 & ON
S---180 SERIAL 18051111 & ON

NOTE• FOR ACCESSORY KIT LISTINGS REFER TO PAGES 372 THRU 374B

S-NOS APPEARING ON THIS PAGE ARE CESSNA STANDARD

Fuel System

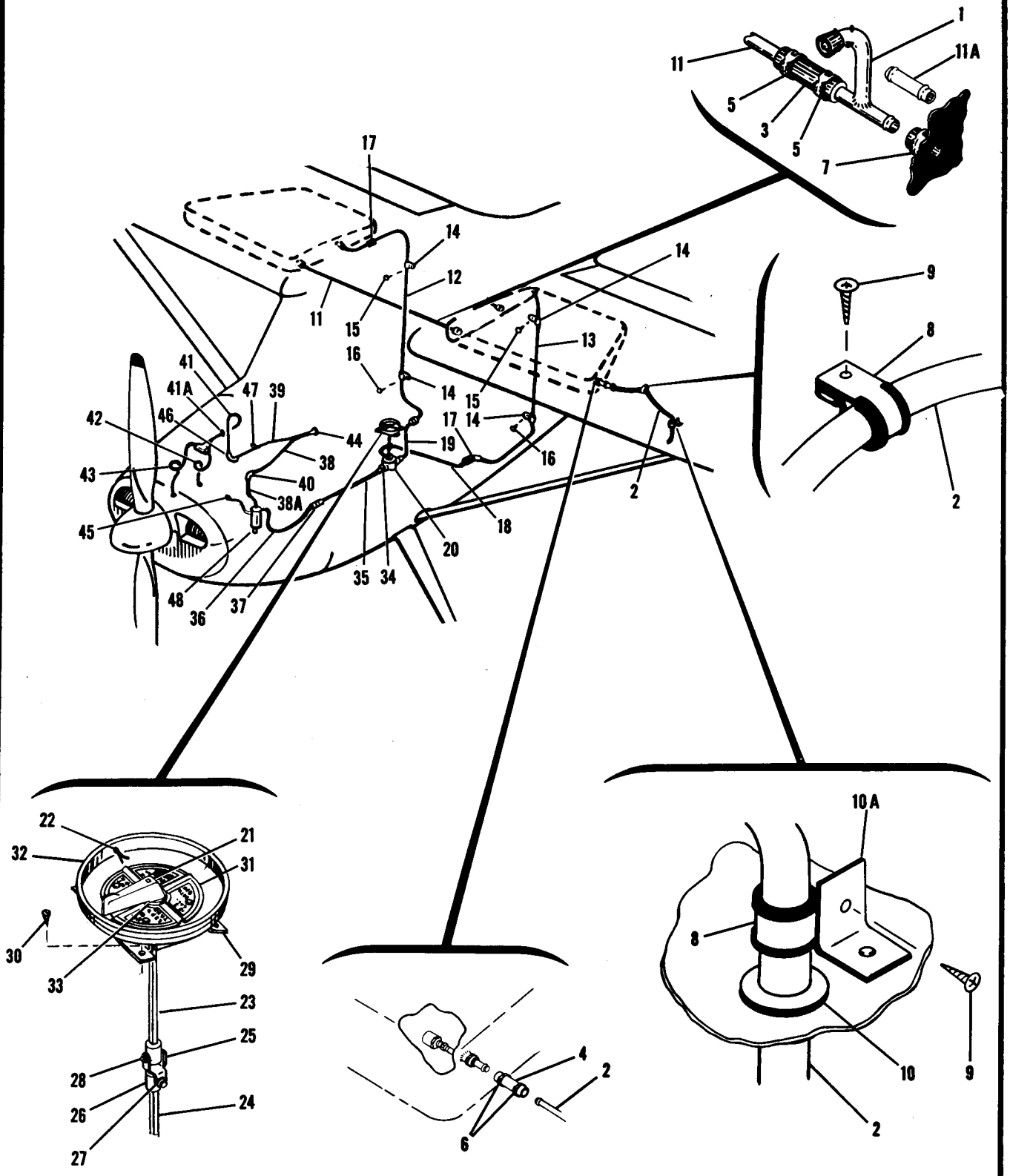

180 SERIAL 30000 THRU 18051063

Figure 96. Fuel System Installation

FIGURE AND INDEX NO.	PART NUMBER		DESCRIPTION 1 2 3 4 5 6 7	UNITS PER ASSY	USABLE ON CODE
96-			FUEL SYSTEM INSTALLATION	NP	J
- 1	0716119-10		VENT ASSEMBLY-FUEL CELL **180 SERIAL 30000**	1	A
- 2	0716122	*	VENT TUBE-FUEL CELL -----	1	B
	0716127-1		VENT TUBE-FUEL CELL ----- **THRU 18051063**	1	E
			ATTACHING PARTS		
- 3	S-51-6		HOSE-2.25 IN. LG. BULK ITEM REF S-51-6-9	1	A
- 4	S-51-8	*	HOSE-2.00 IN. LG. BULK ITEM REF S-51-8-8	1	A
- 5	NAS397-12		CLAMP TIN A3122-12	1	A
- 6	NAS397-16-1	*	CLAMP TIN A3122-16-1	1	A
- 7	NAS397-14-1		CLAMP TIN A3122-14-1	2	A
- 8	A3047A-8-92	*	CLAMP TIN	2	F
- 9	S-1021Z-8-8	*	SCREW CESSNA STANDARD	2	F
- 10	MS35489-14		GROMMET	1	F
-10A	0512006	*	ANGLE	1	F
			---*---		
- 11	0500106-109		LINE FUEL VENT TO TANK RH	1	A
	0500106-209		LINE-LEFT TANK TO TANK VENT RH	1	F
-11A	10180-002-5	*	TUBE-AIR VENT	1	A
			ATTACHING PARTS		
	NAS397-12		CLAMP TIN A3122-12	2	
			---*---		
- 12	0500106-154		LINE-RH UNION TO UNION	1	
- 13	0500106-153		LINE-LH UNION TO UNION	1	
			ATTACHING PARTS		
- 14	A2981A-6		CLAMP TIN	2	
- 15	S-1021Z-6-6		SCREW UPPER CLAMP-----CESSNA STANDARD	2	
- 16	S-1021Z-8-8		SCREW LOWER CLAMP-----CESSNA STANDARD	2	
			---*---		
- 17	AN815-6D		UNION	4	
- 18	0500106-111		LINE-LH UNION TO FUEL SELECTOR VALVE	1	
- 19	0500106-110		LINE-RH UNION TO FUEL SELECTOR VALVE	1	
- 20	0311070-1		VALVE ASSEMBLY-FUEL SELECTOR SEE FIGURE 138	1	
			ATTACHING PARTS		
	AN515-8R8		SCREW	2	
			---*---		
	0511157-20		HANDLE ASSEMBLY-FUEL SELECTOR	1	
- 21	0716612-202		HANDLE-FUEL SELECTOR	1	
			ATTACHING PARTS		
- 22	NAS561-C2-10		PIN-SLOTTED	1	
			---*---		
	0511157-14		SHAFT ASSEMBLY-FUEL SELECTOR	1	M
- 23	0511157-18		SHAFT ASSY-FUEL SELECTOR	1	
- 24	0511157-11		SHAFT-UPPER	1	
	0511157-17		SHAFT-LOWER	1	L
- 25	0511194-4		SHAFT-LOWER	1	M
			PIVOT	2	
- 26	0511127		ATTACHING PARTS		
- 27	AN960-6		SPACER	1	
- 28	0425134		WASHER	4	
			PIN	2	
- 29	0716102		---*---		
			BRACKET-FUEL SELECTOR	1	
- 30	AN515-8R8		ATTACHING PARTS		
			SCREW	4	
- 31	0716167		---*---		
- 32	0511198		PLATE ASSEMBLY-FUEL SELECTOR	1	
- 33	0511195		CUP	1	
- 34	0511196-1		GUIDE-SHAFT	1	
	AN931-1		ADAPTER-FUEL SELECTOR VALVE	1	
- 35	0500106-99		PLUG	1	
			LINE-FUEL SELECTOR VALVE TO UNION	1	

S-NOS APPEARING ON THIS PAGE ARE CESSNA STANDARD

CONTINUED ON PAGE 266

FIGURE AND INDEX NO.	PART NUMBER	DESCRIPTION 1 2 3 4 5 6 7	UNITS PER ASSY	USABLE ON CODE
96- 36	0500106-114	LINE UNION TO FUEL STRAINER	1	
- 37	AN515-8D	UNION	1	
- 38	0500106-96	LINE PRIMER TO FIREWALL LH	1	C
	0500106-121	LINE PRIMER TO FIREWALL LH	1	D
-38A	0500106-105	LINE-PRIMER-----STRAINER TO FIREWALL FITTING	1	
- 39	0500106-97	LINE PRIMER TO FIREWALL RH	1	C
	0500106-121	LINE PRIMER TO FIREWALL RH	1	D
		ATTACHING PARTS		
- 40	AN833-2D	ELBOW	1	
	AN960D516	WASHER	1	
	AN924-2D	NUT	1	
		---*---		
- 41	0500106-133	LINE-PRIMER-----FIREWALL TO BAFFLES	1	
		ATTACHING PARTS		
-41A	MS21919DG-2	CLAMP	1	K
	S-1021Z-8-6	SCREW CESSNA STANDARD	1	K
	NAS446-4-3	NUT	1	K
		---*---		
- 42	0500106-104	LINE-PRIMER	1	C
	0500106-196	LINE-PRIMER	1	D
- 43	0500106-103	LINE-PRIMER	1	C
	0500106-197	LINE-PRIMER	1	D
- 44	0311538-8	PRIMER ASSEMBLY-ENGINE	1	G
	0311538-10	PRIMER ASSEMBLY-ENGINE	1	H
- 45	S-1167-8-0120	HOSE ASSEMBLY FUEL STRAINER TO CARBURETOR	1	
		ATTACHING PARTS		
	AN915-2	ELBOW	1	
		---*---		
- 46	AN833-2D	ELBOW	1	
	AN960D516	WASHER	1	
	AN924-2D	NUT	1	
- 47	A3046-4A	CLAMP TIN	1	
		ATTACHING PARTS		
	NAS446-4-3	NUT TIN A1778-8Z-3	1	
	S-1021Z-4-6	SCREW CESSNA STANDARD	1	
		---*---		
- 48		STRAINER INSTALLATION-----SEE FIGURE 100	1	

A---180 SERIAL 30000 THRU 32487
B---180 SERIAL 32488 THRU 32661
C---180 SERIAL 30000 THRU 32150
D---180 SERIAL 32151 THRU 18051063
E---180 SERIAL 32662 THRU 18051063
F---180 SERIAL 32488 THRU 18051063
G---180 SERIAL 30000 THRU 50355
H---180 SERIAL 50356 THRU 18051063
J---180 SERIAL 30000 THRU 18051063
K---180 SERIAL 50662 THRU 18051063
L---180 SERIAL 30000 THRU 18050924
M---180 SERIAL 18050925 THRU 18051063

* NOTE. THESE ITEMS ARE PART OF SK180-6 SERVICE KIT FOUND ON FIGURE 6.
S-NOS APPEARING ON THIS PAGE ARE CESSNA STANDARD

FIGURE AND INDEX NO.	PART NUMBER	DESCRIPTION	UNITS PER ASSY	USABLE ON CODE
		1 2 3 4 5 6 7		
96A-		FUEL SYSTEM INSTALLATION		
- 1	0500106-209	LINE-LEFT TANK TO RIGHT TANK VENT --- 180 SERIAL ---	NP	A
		ATTACHING PARTS	1	
	NAS397-14	CLAMP TIN A-3122-12 --- 18051064 & ON	2	B
	QS100-M10S	CLAMP BC	2	C
		---*---		
- 2	0500106-322	LINE ASSEMBLY-FUEL RH LOWER AFT	1	
- 3	0500106-326	LINE ASSEMBLY-FUEL LH LOWER AFT	1	
- 4	0500106-346	LINE ASSEMBLY-FUEL UPPER AFT	2	
		ATTACHING PARTS		
- 4A	AN821-6D	ELBOW	1	
	A-2981A-6-27	CLAMP	2	
- 5	S-1021Z-6-6	SCREW UPPER CLAMP	2	
- 6	S-1021Z-8-8	SCREW LOWER CLAMP	2	
		---*---		
- 7	AN815-6D	UNION	2	
- 8	AN824-6D	TEE	2	
- 9	0500106-359	LINE-FUEL LH TEE TO FUEL SELECTOR	1	
	0700087-12	LINE-FUEL LH TEE TO FUEL SELECTOR	1	
		CENTERLINE CAMERA INSTALLATION ONLY		
- 10	0500106-358	LINE-FUEL RH TEE TO FUEL SELECTOR	1	
- 11	0500106-321	LINE-FUEL RH TANK TO ELBOW FORWARD	1	
- 12	0500106-325	LINE-FUEL LH TANK TO ELBOW FORWARD	1	
		ATTACHING PARTS		
- 13	AN815-6D	UNION	1	
- 14	A2980A-6-27	CLAMP TIN	1	
	S-1021Z-8-8	SCREW	1	
		---*---		
- 15	AN821-6D	ELBOW	2	
- 16	0500106-320	LINE-FUEL RH ELBOW TO TEE	1	
- 17	0500106-324	LINE-FUEL LH ELBOW TO TEE	1	
- 18	0311070-1	VALVE ASSEMBLY-FUEL SELECTOR SEE FIGURE 138	1	
		ATTACHING PARTS		
	AN515-8R8	SCREW	2	
		---*---		
	0511157-20	HANDLE ASSEMBLY-FUEL SELECTOR	1	
- 19	0716612-202	HANDLE-FUEL SELECTOR	1	
		ATTACHING PARTS		
- 20	NAS561-2-10	PIN-SLOTTED	1	
		---*---		
- 21	0511157-18	SHAFT-UPPER	1	
- 22	0511157-17	SHAFT-LOWER	1	
- 23	0511194-4	PIVOT	2	
		ATTACHING PARTS		
- 24	0511127	SPACER	1	

S-NOS APPEARING ON THIS PAGE ARE CESSNA STANDARD

CONTINUED ON PAGES 266B & 266C

Fuel System (Cont)

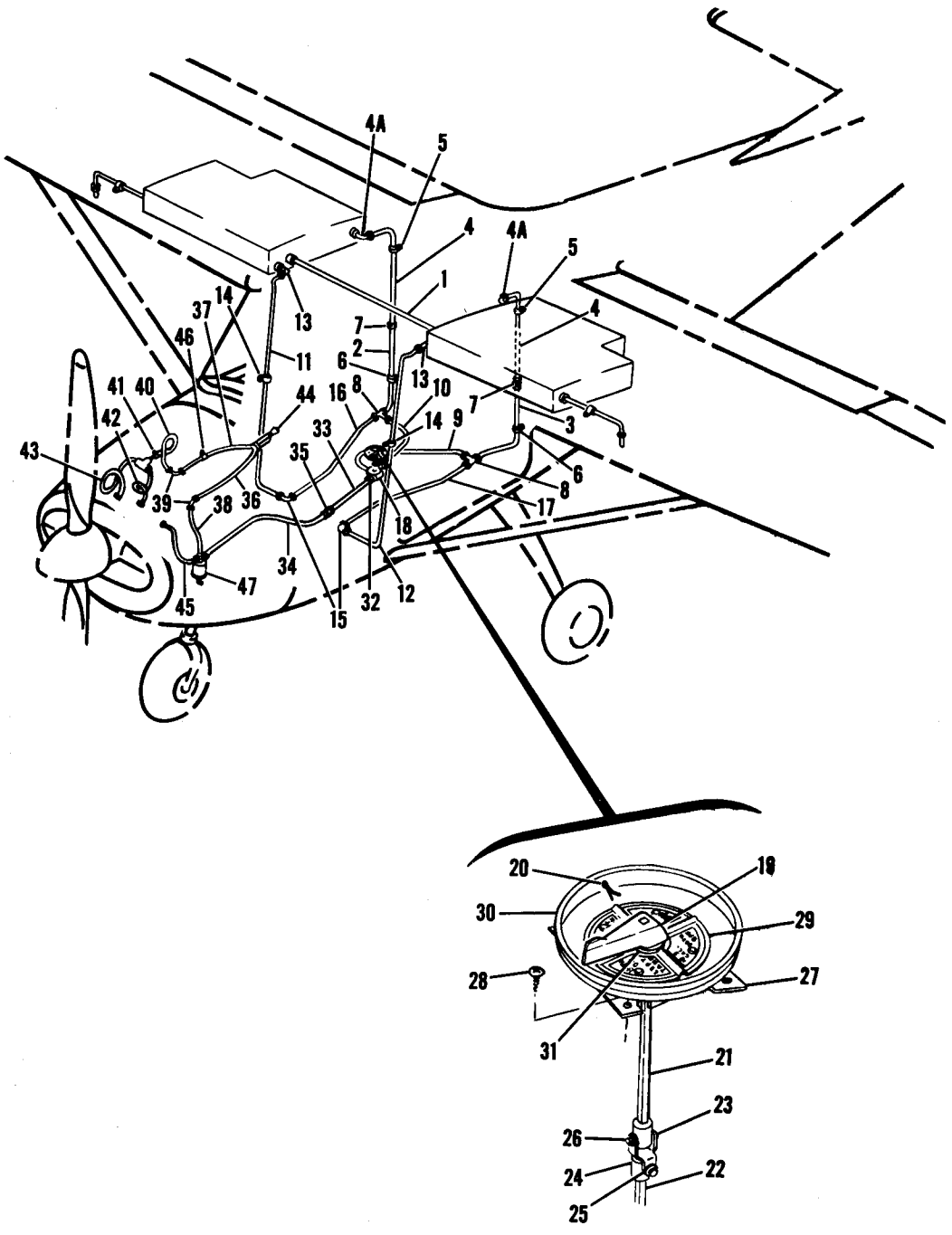

180 SERIAL 18051064 & ON

Figure 96A. Fuel System Installation

FIGURE AND INDEX NO.	PART NUMBER	DESCRIPTION 1 2 3 4 5 6 7	UNITS PER ASSY	USABLE ON CODE
96A- 25	AN960-6	WASHER	4	
- 26	0425134	PIN	2	
		---*---		
- 27	0716102	BRACKET-FUEL SELECTOR	1	
		ATTACHING PARTS		
- 28	AN515-8R8	SCREW	4	
		---*---		
- 29	S-1286-3	PLATE ASSEMBLY-FUEL SELECTOR 60 GAL.-----BLACK	1	
	S-1286-1	PLATE ASSEMBLY-FUEL SELECTOR 60 GAL.-----BROWN	1	
	S-1286-4	PLATE ASSEMBLY-FUEL SELECTOR 79 GAL.-----BLACK	1	
	S-1286-2	PLATE ASSEMBLY-FUEL SELECTOR 79 GAL.-----BROWN	1	
- 30	0511198	CUP	1	
- 31	0511195	GUIDE-SHAFT	1	
- 32	0511196-1	ADAPTER-FUEL SELECTOR VALVE	1	
	AN931-1	PLUG	1	
- 33	0500106-99	LINE-FUEL SELECTOR VALVE TO UNION	1	
- 34	0500106-205	LINE-FUEL UNION TO FUEL STRAINER	1	
- 35	AN815-8D	UNION	1	
- 36	0500106-121	LINE PRIMER TO FIREWALL LH	1	
- 37	0500106-122	LINE PRIMER TO FIREWALL RH	1	
- 38	0500106-202	LINE-PRIMER STRAINER TO FIREWALL FITTING	1	
		ATTACHING PARTS		
- 39	AN833-2D	ELBOW	1	
	AN960D516	WASHER	2	
	AN924-2D	NUT	2	
		---*---	2	
- 40	0500106-133	LINE-PRIMER-----FIREWALL TO BAFFLES	1	
		ATTACHING PARTS		
- 41	MS21919DG-2	CLAMP	1	
	S-1021Z-8-6	SCREW	1	
	NAS446-4-3	NUT	1	
		---*---		
- 42	0500106-196	LINE-PRIMER	1	
- 43	0500106-197	LINE-PRIMER	1	
- 44	0311538-10	PRIMER ASSEMBLY-ENGINE	1	
- 45	S-1167-8-0120	HOSE ASSEMBLY FUEL STRAINER TO CARBURETOR	1	
		ATTACHING PARTS		
	AN915-2	ELBOW	1	
		---*---		
- 46	A3046-4A	CLAMP TIN	1	
		ATTACHING PARTS		
	NAS446-4-3	NUT TIN A1778-8Z-3	1	
	S-1021Z-4-6	SCREW	1	
		---*---		
- 47		STRAINER INSTALLATION-----SEE FIGURE 100	1	

A---180 SERIAL 18051064 & ON
B---180 SERIAL 18051064 THRU 18051099
C---180 SERIAL 18051100 & ON
S-NOS APPEARING ON THIS PAGE ARE CESSNA STANDARD

FIGURE AND INDEX NO.	PART NUMBER	DESCRIPTION 1 2 3 4 5 6 7	UNITS PER ASSY	USABLE ON CODE
97-		FUEL SYSTEM INSTALLATION	NP	E
- 1	0716122	VENT TUBE-FUEL CELL **182 ALL**	1	A
	0716127-1	VENT TUBE-FUEL CELL **SERIALS**	1	B
		ATTACHING PARTS		
- 2	0512006	ANGLE	1	
- 3	A3047A-8-92	CLAMP TIN	2	
- 4	S-1021Z-8-8	SCREW CESSNA STANDARD	2	
- 5	MS35489-14	GROMMET	1	
- 6	S-51-8	HOSE-VENT 2.00 IN. LG.---- BULK ITEM-----REF S-51-8-8 CESSNA STANDARD	1	
- 7	NAS397-16-1	CLAMP A3122-16-1	2	
		---*---		
- 8	0500106-209	LINE-VENT LH TANK TO RH TANK	1	
		ATTACHING PARTS		
- 9	NAS397-14-1	CLAMP TIN A3122-14-1	2	
		---*---		
- 10	0500106-178	LINE-LH FUEL FUEL TANK STRAINER TO SELECTOR VALVE ----	1	
- 11	0500106-179	LINE-RH FUEL FUEL TANK STRAINER TO SELECTOR VALVE ----	1	
		ATTACHING PARTS		
- 12	A2981A-6	CLAMP TIN	2	
- 13	S-1021Z-8-8	SCREW CESSNA STANDARD	2	
		---*---		
- 14	AN815-6D	UNION	4	
- 15	0500106-191	LINE-LH FUEL	1	
- 16	0500106-192	LINE-RH FUEL	1	
- 17	0311070-1	VALVE ASSEMBLY-FUEL SELECTOR SEE FIGURE 138	1	
	0511157-20	HANDLE ASSEMBLY-FUEL SELECTOR VALVE	1	
- 18	0716612-202	HANDLE-FUEL SELECTOR VALVE	1	
		ATTACHING PARTS		
- 19	NAS561-2C-10	PIN-SLOTTED	1	
		---*---		
		SHAFT ASSEMBLY-FUEL SELECTOR VALVE	1	G
	0511157-15	SHAFT ASSEMBLY-FUEL SELECTOR VALVE	1	F
- 20	0511157-6	SHAFT-UPPER	1	F
	0511157-18	SHAFT-UPPER	1	G
- 21	0511157-11	SHAFT-LOWER	1	F
	0511157-17	SHAFT-LOWER	1	G
- 22	0511194-4	PIVOT	2	
		ATTACHING PARTS		
- 23	0511127	SPACER	1	
- 24	AN960-6	WASHER	4	
- 25	0425134	PIN	2	
		---*---		

CONTINUED ON PAGE 268

Fuel System (Cont)

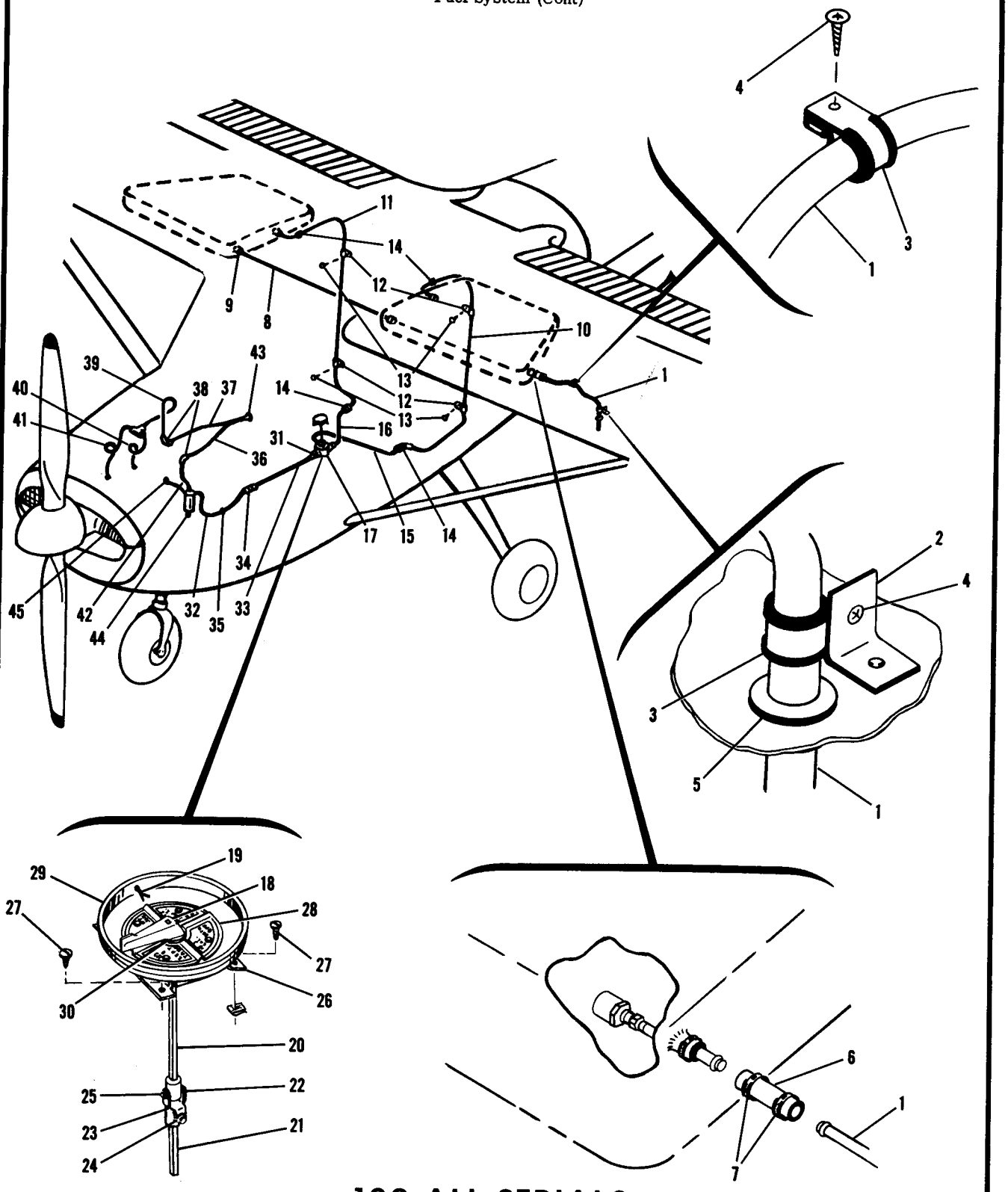

182 ALL SERIALS

Figure 97. Fuel System Installation

FIGURE AND INDEX NO.	PART NUMBER	DESCRIPTION 1 2 3 4 5 6 7	UNITS PER ASSY	USABLE ON CODE
97- 26	0716102	BRACKET-FUEL SELECTOR VALVE	1	
		ATTACHING PARTS		
- 27	S-1021Z-8-10	SCREW CESSNA STANDARD	4	
		---*---		
- 28	0716167	PLATE ASSEMBLY-FUEL SELECTOR VALVE	1	
- 29	0511198	CUP	1	
- 30	0511195	GUIDE-SHAFT	1	
- 31	0511196-1	ADAPTER-FUEL SELECTOR VALVE	1	
	MS20913-1	PLUG	1	
- 32	0500106-205	LINE-FUEL UNION TO FUEL STRAINER	1	
- 33	0500106-99	LINE-FUEL UNION TO FUEL SELECTOR	1	
		ATTACHING PARTS		
- 34	AN815-8D	UNION	1	
		---*---		
- 35	MS35489-20	GROMMET	1	
- 36	0500106-96	LINE-PRIMER-----PRIMER TO FIREWALL LH	1	
- 37	0500106-97	LINE-PRIMER-----PRIMER TO FIREWALL RH	1	
		ATTACHING PARTS		
- 38	AN833-2D	ELBOW	2	
	AN960D516	WASHER	2	
	AN924-2D	NUT	2	
		---*---		
- 39	0500106-133	LINE-PRIMER-----FIREWALL TO BAFFLES	1	
- 40	0500106-104	LINE-PRIMER	1	
- 41	0500106-103	LINE-PRIMER	1	
- 42	0500106-202	LINE-FUEL ELBOW TO FUEL STRAINER	1	
- 43	0311538-8	PRIMER ASSEMBLY-ENGINE	1	C
	0311538-10	PRIMER ASSEMBLY-ENGINE	1	D
- 44		STRAINER INSTALLATION-FUEL---- SEE FIGURE 101	1	
- 45	AN915-2	ELBOW	1	
	AN816-7D	NIPPLE	1	

A---182 SERIAL 33000 THRU 33842
B---182 SERIAL 33843 & ON
C---182 SERIAL 33000 THRU 51556
D---182 SERIAL 51557 & ON
E---182 SERIAL 33000 & ON
F---182 SERIAL 33000 THRU 18253039
G---182 SERIAL 18253040 & ON

FIGURE AND INDEX NO.	PART NUMBER		DESCRIPTION 1 2 3 4 5 6 7	UNITS PER ASSY	USABLE ON CODE
98-	0716128-34	*	INSTALLATION KIT-AUXILIARY FUEL SYSTEM	1	A
	0716128-33	*	INSTALLATION KIT-AUXILIARY FUEL SYSTEM	1	B
- 1	0716128-4		TANK ASSEMBLY-FUEL	1	A
	0716128-5		TANK ASSEMBLY-FUEL	1	B
			ATTACHING PARTS		
- 2	0716128-23		RESTRAINER-FORWARD	1	
			---*---		
- 3	0716128-26		FILLER NECK	1	
			ATTACHING PARTS		
- 4	AN515-6R7		SCREW	6	
- 5	AN960D6		WASHER	6	
- 6	MS20365-632C		NUT	6	
			---*---		
- 7	0716128-25		HOSE-FILLER NECK	1	
			ATTACHING PARTS		
- 8	AN737TW82		CLAMP	2	
			---*---		
- 9	0716128-24		CAP-GAS	1	
- 10	0716128-6		FLOOR ASSEMBLY	1	
- 11	0716128-7		SUPPORT-FLOOR	1	
			ATTACHING PARTS		
	AN545-6R8		SCREW	4	
			---*---		
- 12	0716128-10		BRACKET	4	
			ATTACHING PARTS		
- 13	AN3-3A		BOLT	1	
	AN3-6A		BOLT	1	
	AN970-3		WASHER	2	
	MS20365-1032C		NUT	2	
			---*---		
- 14	0716128-15		PEG-FLOOR SUPPORT	1	
- 15	0716128-3		CURTAIN-BAGGAGE	1	
- 16	0716128-8		ANGLE-CURTAIN	1	
- 17	0716128-9		WIRE BUNDLE	1	
- 18	0716128-13		PUMP-TRANSFER	1	
			ATTACHING PARTS		
- 19	AN3-3A		BOLT	2	
- 20	MS20365-1032C		NUT	2	
			---*---		
- 21	0716128-11		HOSE TANK TO PUMP	1	
- 22	0716128-11		HOSE-FORWARD DRAIN	1	B
- 23	0716128-21		HOSE-REAR DRAIN	1	A
- 24	0716128-12		HOSE PUMP TO TEE	1	
- 25	1111-51772		VALVE-CHECK-----PAET	1	
	1-656-2-.75		VALVE-CHECK-----REPM ALTERNATE	1	
- 26	AN824-6D		TEE	1	
- 27	TA3-716D9		CLAMP JAVELIN AIRCRAFT CO.	2	
			ATTACHING PARTS		
	AN3-3A		BOLT	2	
	MS20365-632C		NUT	1	
			---*---		
- 28	0716128-16		VALVE-DRAIN	1	
- 29	AN6227B8		O RING	1	
- 30	0716128-17		ADAPTER-DRAIN	1	
- 31	MS20822-4D		ELBOW	1	
- 32	0716128-22		HOSE-CONNECTOR	1	
- 33	AN825-4D		TEE	1	
- 34	0716128-19		RETAINER-TANK CLOSURE	1	
			ATTACHING PARTS		
- 35	S-1021Z-8-8		SCREW CESSNA STANDARD	8	
			---*---		
- 36	0716128-32		VENT ASSEMBLY	1	
			ATTACHING PARTS		
	S-1021Z-2-4		SCREW CESSNA STANDARD	10	
			---*---		

180 SERIAL 30000 THRU 18051063

182 ALL SERIALS

CONTINUED ON PAGES 270 & 271

Fuel System (Cont)

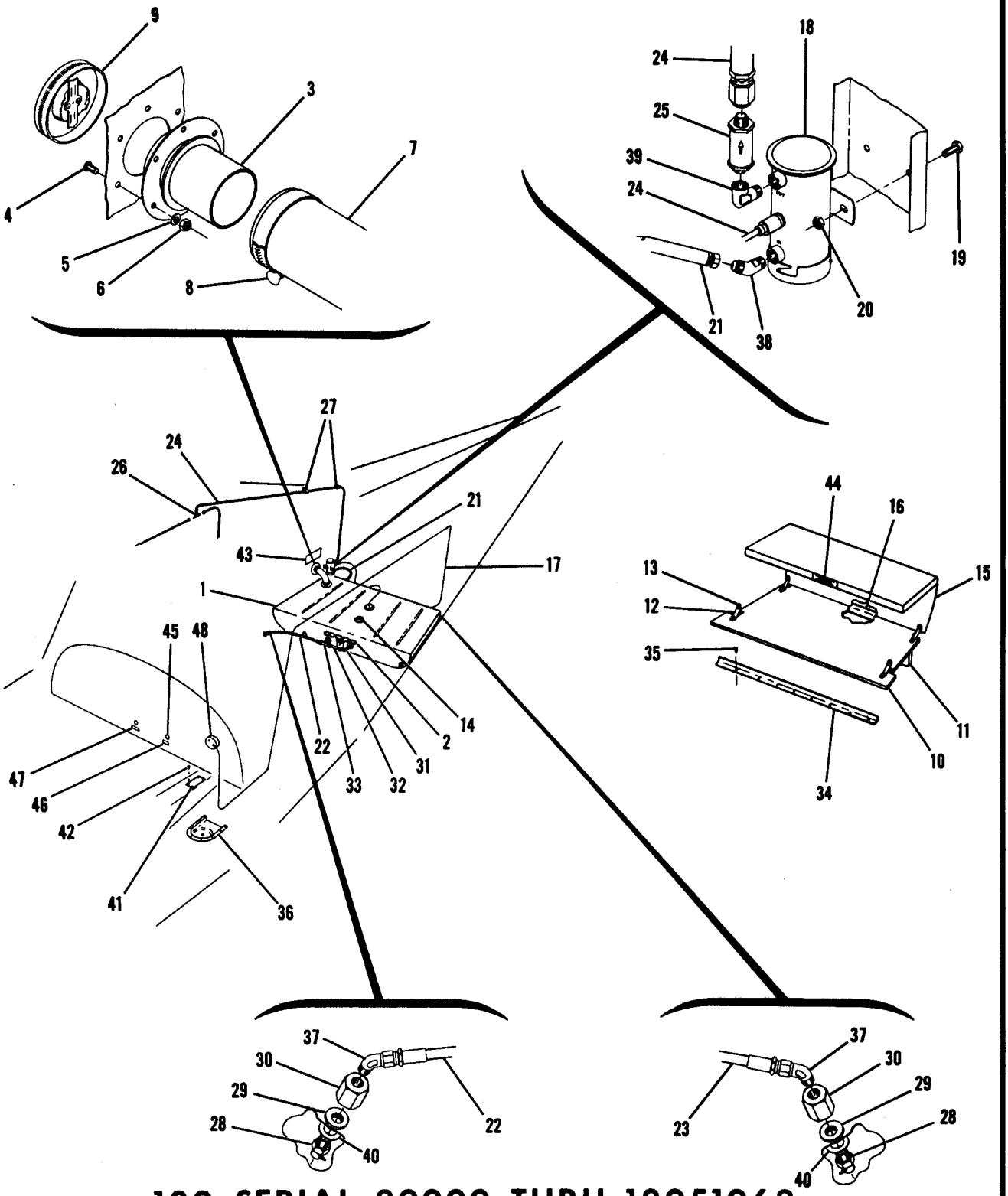

180 SERIAL 30000 THRU 18051063
182 ALL SERIALS

Figure 98. Auxiliary Fuel System Installation

FIGURE AND INDEX NO.	PART NUMBER	DESCRIPTION 1 2 3 4 5 6 7	UNITS PER ASSY	USABLE ON CODE
98- 37	AN823-4D	ELBOW-DRAIN HOSE CONNECTION	1	
- 38	AN823-4D	ELBOW-PUMP HOSE CONNECTION	1	
- 39	AN914-1D	ELBOW	1	
- 40	AN960-716L	WASHER	1	
- 41	0716128-27	PLACARD-INSTRUCTION	1	
		ATTACHING PARTS		
- 42	S-1021Z-6-8	SCREW CESSNA STANDARD	4	
		---*---		
- 43	0716128-18	INSTRUCTION PLATE-FILL	1	
- 44	0716128-20	DECAL-BAGGAGE LOADING	1	
- 45	0716128-28	SWITCH-FUEL TRANSFER	1	
- 46	0716128-31	DECAL-TRANSFER SWITCH	1	
- 47	0716128-29	DECAL-CIRCUIT BREAKER	1	
- 48	0716128-30	GAGE-FUEL	1	
		A---180 SERIAL 30000 THRU 18051063		
		B---182 SERIAL 33000 & ON		
		*NOTE. DO NOT INSTALL IN AIRCRAFT EQUIPPED WITH STEWART WARNER HEATER		
		NOTE. FOR ACCESSORY KIT LISTINGS REFER TO PAGES 372 THRU 374B		

Oil System

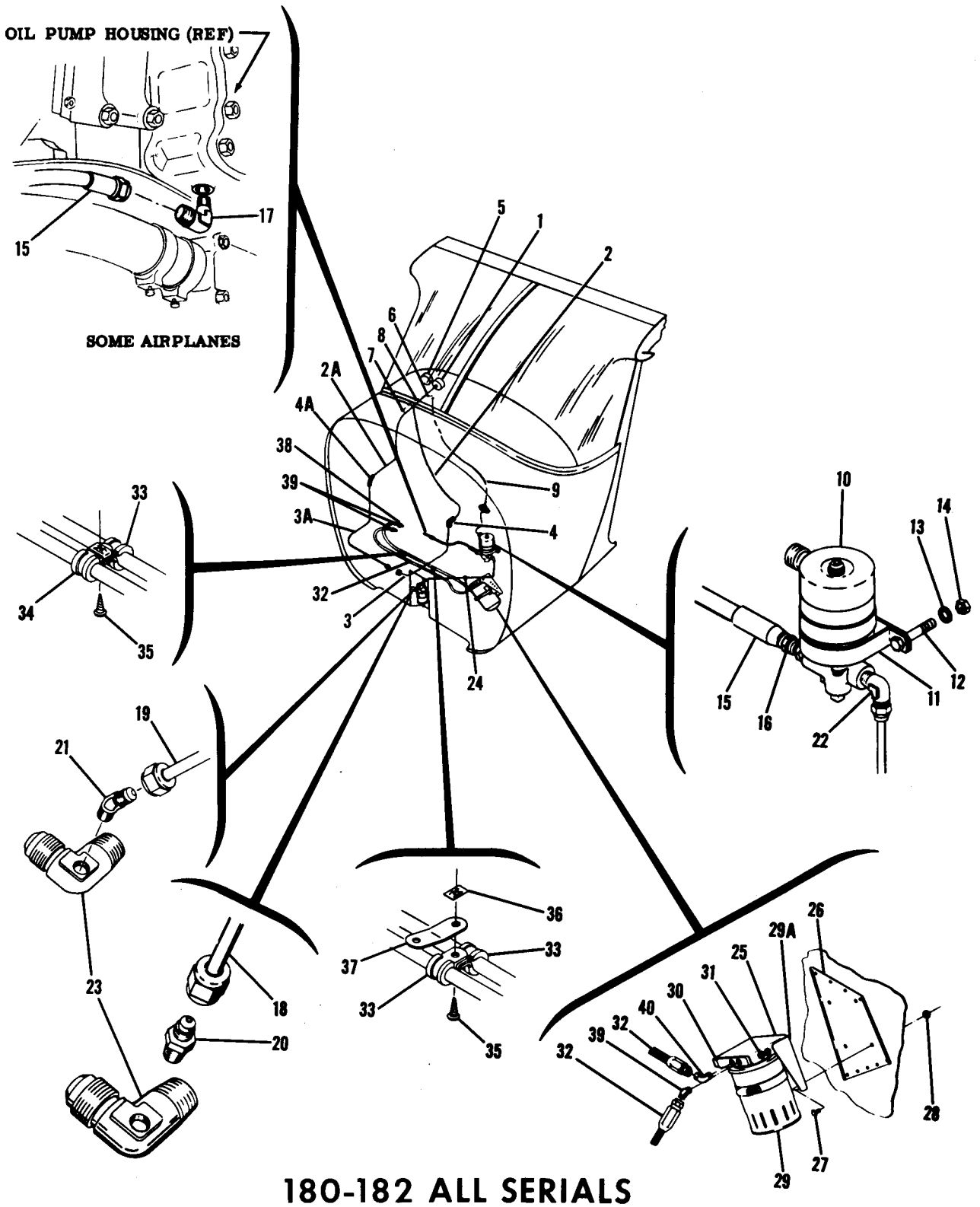

Figure 99. Oil System Installation

FIGURE AND INDEX NO.	PART NUMBER		DESCRIPTION 1 2 3 4 5 6 7	UNITS PER ASSY	USABLE ON CODE
99-			OIL SYSTEM INSTALLATION	NP	
- 1	0411016-3		GAGE-OIL PRESSURE	1	A
	0713062-4		GAGE-OIL PRESSURE	1	B
	0513144-9		GAGE-OIL PRESSURE	1	C
- 2	0500106-92		LINE-OIL PRESSURE GAGE TO FIREWALL	1	A
	0500106-292		LINE-OIL PRESSURE GAGE TO FIREWALL	1	L
- 3	0500106-106		LINE-OIL PRESSURE FIREWALL TO ENGINE	1	A
- 3A	S-1167-4-0388		LINE-OIL PRESSURE FIREWALL TO ENGINE	1	L
			ATTACHING PARTS		
	AN816-2D		NIPPLE	1	A
	AN910-1D		COUPLING	1	A
	AN912-3		BUSHING	1	A
	MS20822-2D		ELBOW	1	A
- 4	AN833-2D		ELBOW	1	A
	AN960D516		WASHER	1	A
	AN924-2D		NUT	1	A
- 4A	AN837-4D		ELBOW	1	L
	AN960-D716		WASHER	1	L
	AN924-4D		NUT	1	L
			---*---		
- 5	0411017-4		GAGE-OIL TEMPERATURE	1	
- 6	0511063		OIL DILUTION INSTALLATION	NP	
			SWITCH-OIL DILUTION	1	
	0511063-2		ATTACHING PARTS		
			NUT	1	
			---*---		
- 7	CM-15		CIRCUIT BREAKER SPT	1	D
	PSM-15N		CIRCUIT BREAKER SPT	1	E
- 8			DELETED NOT PROCURABLE		
- 9			DELETED NOT PROCURABLE		
- 10	AN4078-1		VALVE-SOLENOID	1	
			ATTACHING PARTS		
- 11	AN742D32		CLAMP TIN A2980A-32	2	
- 12	AN3-5A		BOLT	2	
- 13	AN960-10L		WASHER	2	
- 14	MS20365-1032C		NUT	2	
			---*---		
- 15	S-1168-4-13		HOSE ASSEMBLY VALVE TO ENGINE OIL PUMP	1	J
	S-1168-4-16		HOSE ASSEMBLY VALVE TO ENGINE OIL PUMP	1	H
	S-1168-4-11		HOSE ASSEMBLY VALVE TO ENGINE OIL PUMP	1	L
			ATTACHING PARTS		
- 16	AN816-4D		UNION	1	
- 17	AN823-4B		ELBOW	1	
			---*---		
- 18	0500106-144		FUEL LINE-----VALVE TO STRAINER	1	F
- 19	0500106-220	*	FUEL LINE-----VALVE TO STRAINER	1	G
- 20	AN816-4D		NIPPLE	1	F
- 21	AN823-4D		ELBOW	1	G
- 22	MS20822-4D		ELBOW	1	
- 23	0750100-18		ELBOW	1	K
	0750035-1		ELBOW	1	L
- 24	AN742D4		CLAMP	1	
	S-1021Z-8-6		SCREW CESSNA STANDARD	1	
	NAS446-4-3		NUT TIN A1778-8Z-3	1	
			---*---		
- 25	0750147-5		INSTALLATION-OIL FILTER	NP	
			BRACKET & FILTER ASSEMBLY	1	
- 26	0750028-2		ATTACHING PARTS		
- 27	AN4-3A		DOUBLER	1	
- 28	MS20365-428C		BOLT	4	
			NUT	4	
- 29	PB55		---*---		
-29A	X-109488		FILTER ASSEMBLY FCD	1	
- 30	109450		BRACKET-----FCD	1	
			ADAPTER-----FCD	1	
- 31	109532		ATTACHING PARTS		
	109531		SCREW FCD	4	
			WASHER FCD	4	
			---*---		

180-182 ALL SERIALS

S-NOS APPEARING ON THIS PAGE ARE CESSNA STANDARD

CONTINUED ON PAGE 274

FIGURE AND INDEX NO.	PART NUMBER	DESCRIPTION 1 2 3 4 5 6 7	UNITS PER ASSY	USABLE ON CODE
99- 32	S-1167-4-34	HOSE ASSEMBLY-OIL FILTER---- CESSNA STANDARD ----------	2	
		ATTACHING PARTS		
- 33	A3046A-8-92	CLAMP TIN ----------	3	
- 34	A3048A-8-92	CLAMP TIN ----------	1	
- 35	S-1021Z-8-10	SCREW CESSNA STANDARD ----------	2	
- 36	NAS446-4-3	NUT TIN A1778-8Z-3 ----------	1	
- 37	0550100-6	CLIP-MOUNTING ----------	1	
		---*---		
- 38	0750147-3	BUSHING ----------	1	
	AN900-10	WASHER ----------	1	
- 39	AN823-4D	ELBOW ----------	3	
- 40	MS20822-4D	ELBOW ----------	1	
		A---180 SERIAL 30000 THRU 32661		
		182 SERIAL 33000 THRU 33842		
		B---180 SERIAL 32662 THRU 50355		
		182 SERIAL 33843 THRU 34753		
		C---180 SERIAL 50356 & ON		
		182 SERIAL 34754 & ON		
		D---180 SERIAL 32151 THRU 32661		
		182 SERIAL 33000 THRU 33842		
		E---180 SERIAL 30000 THRU 32150 & 32662 & ON		
		182 SERIAL 33843 & ON		
		F---180 SERIAL 30000 & ON		
		G---180 SERIAL 50662 & ON		
		182 SERIAL 33000 & ON		
		H---180 SERIAL 30000 THRU 32661		
		182 SERIAL 33000 THRU 33842		
		J---180 SERIAL 32662 THRU 50661		
		182 SERIAL 33000 THRU 52358		
		K---180 SERIAL 30000 THRU 50661		
		182 SERIAL 33000 THRU 52358		
		L---180 SERIAL 50662 & ON		
		182 SERIAL 52359 & ON		
		*NOTE. WHEN OIL DILUTION SYSTEM IS INSTALLED WITH 0750153 WINSLOW OIL FILTER USE 0700099-1 TUBE IN LIEU OF 0500106-220		
		NOTE. FOR ACCESSORY KIT LISTINGS REFER TO PAGES 372 THRU 374B		

Oil Filter

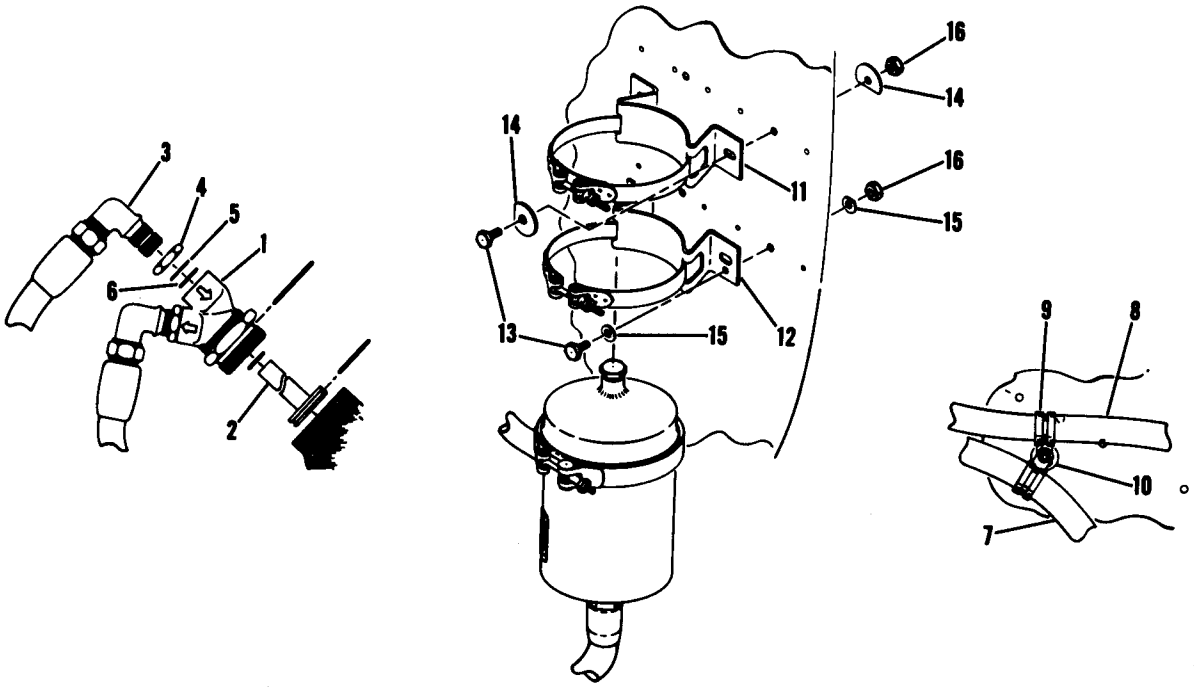

180-182 ALL SERIALS

Figure 99A. Full Flow Oil Filter Installation

FIGURE AND INDEX NO.	PART NUMBER	DESCRIPTION 1 2 3 4 5 6 7	UNITS PER ASSY	USABLE ON CODE
99A-		FULL FLOW OIL FILTER INSTALLATION	NP	
	0750153-8	ADAPTER KIT	1	
- 1	2A0081	ADAPTER WNL	1	
- 2	1A0221-1	EXTENSION-NOSE-----WNL	1	
- 3	AN833-10D	ELBOW	2	
- 4	AN6289D10	NUT	2	
- 5	AN6290-10	GASKET	2	
- 6	MS28777-10	O RING	2	
- 7	S-1167-10-0404	HOSE	1	
- 8	S-1167-10-0404	HOSE	1	
		ATTACHING PARTS		
- 9	MS21919DG15	CLAMP	2	
- 10	NAS43DD3-56	SPACER	1	
	AN520-10R22	SCREW	1	
	MS20365-1032C	NUT	1	
	AN970-3	WASHER	2	
		---*---		
	0750153-10	FILTER & BRACKET ASSEMBLY	1	
	1A0235	ELEMENT-REPLACEMENT-----WNL	1	
	1A0218	SEAL RING-COVER WNL	1	
- 11	1A0233	BRACKET-UPPER WNL	1	
- 12	0750153-3	BRACKET-LOWER	1	
		ATTACHING PARTS		
- 13	AN4-5A	BOLT	2	
- 14	AN960-4	WASHER	4	
- 15	AN960-416	WASHER	4	
- 16	MS20365-428C	NUT	2	
		---*---		
		A---180 SERIAL 30000 THRU 31260 B---180 SERIAL 31261 & ON 182 SERIAL 33000 & ON NOTE. FOR ACCESSORY KIT LISTINGS REFER TO PAGES 372 THRU 374B S-NOS APPEARING ON THIS PAGE ARE CESSNA STANDARD		

Fuel System (Cont)

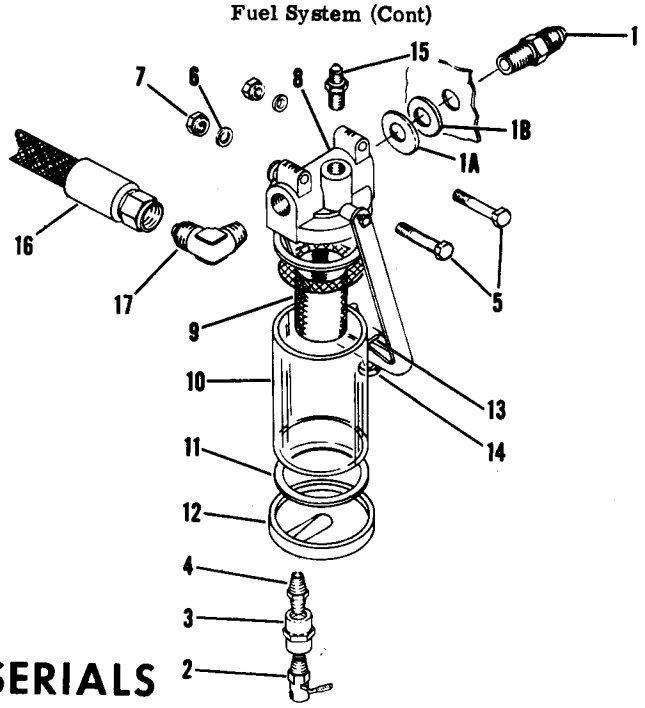

180-182 ALL SERIALS

Figure 100. Fuel Strainer Installation

FIGURE AND INDEX NO.	PART NUMBER	DESCRIPTION 1 2 3 4 5 6 7	UNITS PER ASSY	USABLE ON CODE
100-		STRAINER INSTALLATION-FUEL	NP	
- 1	AN816-8D	NIPPLE	1	
- 1A	0750032-1	SHIELD	2	
- 1B	S-354-3	GROMMET	1	
- 2	0511199-20	VALVE-DRAIN	1	A
	0511199-41	VALVE-DRAIN-----SEE FIGURE 101	1	B
- 3	AN910-1D	COUPLING	1	A
- 4	AN911-1D	NIPPLE	1	A
	0511199-2	STRAINER ASSEMBLY-FUEL GARW 33-199	1	
		ATTACHING PARTS		
- 5	AN4-13A	BOLT	2	
- 6	AN960-416L	WASHER	2	
- 7	MS20365-428C	NUT	2	
		---*---		
- 8	33-199-902	BODY ASSEMBLY-FUEL STRAINER GARW	1	
- 9	33-199-4	SCREEN GARW	1	
- 10	33-199-5	BOWL-GLASS GARW	1	
- 11	33-199-6	GASKET GARW	2	
- 12	33-199-1	CAP GARW	1	
- 13	33-199-8	NUT GARW	1	
- 14	33-199-45B	SCREW SET-----GARW	1	
- 15	AN816-2D	NIPPLE	1	
- 16	S-1167-8-0120	HOSE	1	
- 17	MS20822-2D	ELBOW	1	

A---180 SERIAL 30000 THRU 31639
182 SERIAL 33000 THRU 33842
B---180 SERIAL 31640 & ON
182 SERIAL 33842 & ON
S-NOS APPEARING ON THIS PAGE ARE CESSNA STANDARD

Fuel System (Cont)

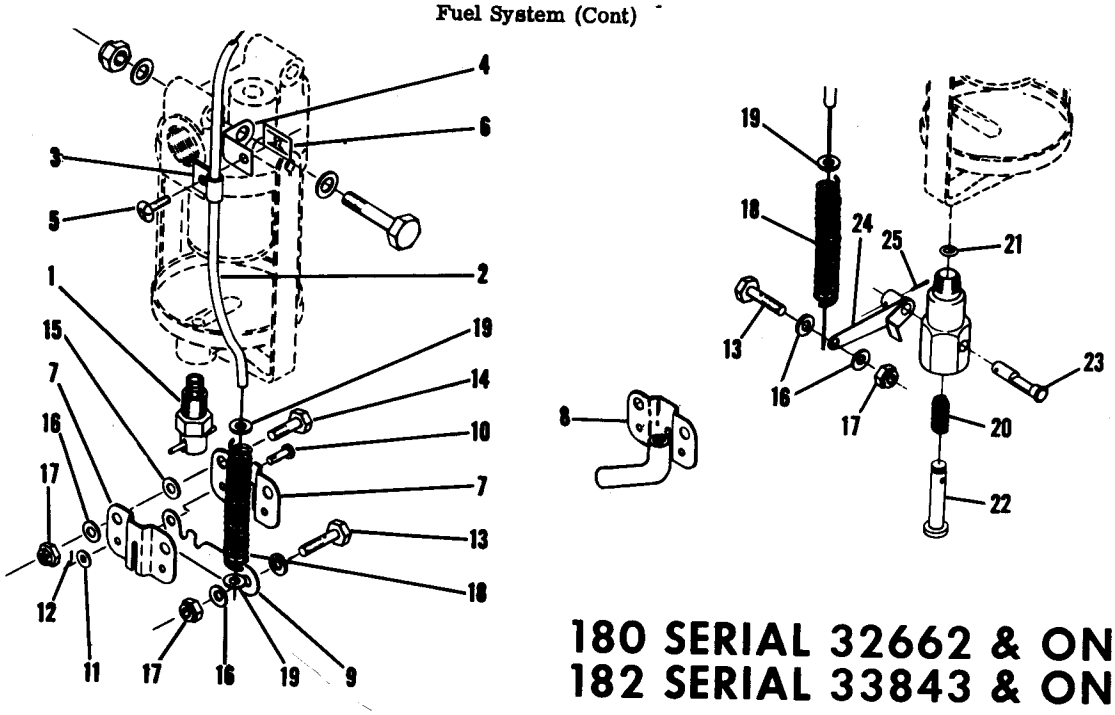

180 SERIAL 32662 & ON
182 SERIAL 33843 & ON

Figure 101. Fuel Drain Valve Control System Installation

FIGURE AND INDEX NO.	PART NUMBER	DESCRIPTION 1 2 3 4 5 6 7	UNITS PER ASSY	USABLE ON CODE
101-		CONTROL SYSTEM INSTALLATION-FUEL, STRAINER DRAIN VALVE ----	NP	A
- 1	0850410-1	DRAIN VALVE----------	1	G
	0850410-2	DRAIN VALVE----------	1	H
- 2	0411090-29	CONTROL-STRAINER DRAIN VALVE REF 0411090-7&-18----------	1	E
	S-1239-4	CONTROL-STRAINER DRAIN VALVE REF 0713302-4 ----------	1	F
	S-1239-3	CONTROL ASSEMBLY-STRAINER DRAIN FLOATPLANE CP ----------	1	
		ATTACHING PARTS		
- 3	AN742-D3	CLAMP ----------	1	
- 4	0756001-3	ANGLE ----------	1	
- 5	S-1021Z-8-8	SCREW CESSNA STANDARD ----------	1	
- 6	NAS446-4-3	NUT TIN A1778-8Z-3 ----------	1	
	AN742D3	CLAMP ----------	1	D
	S-1021Z-8-6	SCREW CESSNA STANDARD ----------		D
	NAS446-4-3	NUT ----------	1	D
		---*---		
	0756001	SUB ASSEMBLY-CLAMP ----------	1	H
	0756001-7	SUB ASSEMBLY-CLAMP ----------	1	H
- 7	0756001-1	CLAMP HALF ----------	2	H
	0756001-1	CLAMP HALF ----------	1	H
- 8	0756001-6	CLAMP HALF ----------	1	H
- 9	0756001-2	PAWL-DRAIN VALVE ----------	1	H
		ATTACHING PARTS		
- 10	MS20392-1-7	PIN ----------	1	H
- 11	AN960-4	WASHER ----------	1	H
- 12	MS24665-132	PIN-COTTER ----------	1	H
		---*---		
- 13	0450311	CLAMP ----------	1	
- 14	AN3-4A	BOLT----------	2	H
- 15	AN960-10L	WASHER ----------	2	H
- 16	AN960-10	WASHER ----------	3	
- 17	MS20365-1032C	NUT ----------	3	
- 18	0756002	SPRING----------	1	
- 19	AN960-2	WASHER----------	2	

CONTINUED ON PAGE 277A

FIGURE AND INDEX NO.	PART NUMBER	1 2 3 4 5 6 7 DESCRIPTION	UNITS PER ASSY	USABLE ON CODE
101-	0511199-41	DRAIN VALVE ASSEMBLY	1	J
- 20	0851583-3	SPRING	1	
- 21	MS29513-7	ORING	1	
- 22	0851583-2	PLUNGER	1	
- 23	0851592-1	SHAFT	1	
- 24	0756001-8	LEVER	1	
- 25	MS24665-281	PIN-COTTER	1	
		A---180 SERIAL 32662 & ON 182 SERIAL 33843 & ON		
		B---182 SERIAL 51692 & ON 182 SKYLANE SERIAL 34754 & ON		
		C---180 SERIAL 32662 & ON 182 SERIAL 33843 THRU 51691		
		D---180 SERIAL 50662 & ON 182 SERIAL 52359 & ON		
		E---180 SERIAL 32662 THRU 50355 182 SERIAL 33843 THRU 51556		
		F---180 SERIAL 50356 & ON 182 SERIAL 51557 & ON		
		G---180 SERIAL 32662 THRU 50888 182 SERIAL 33843 THRU 52936		
		H---180 SERIAL 50889 THRU 18051100 182 SERIAL 52937 & ON		
		J---180 SERIAL 18051101 & ON		

This page intentionally left blank.

Fuel System (Cont)

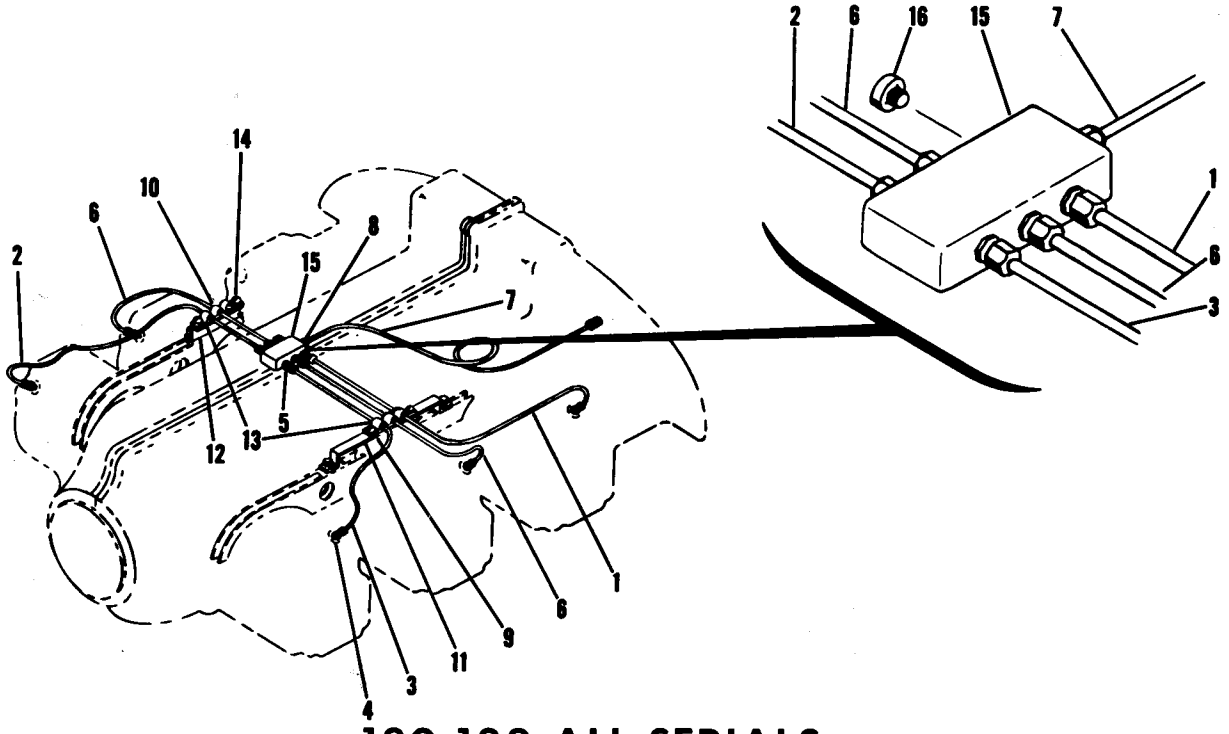

180-182 ALL SERIALS

Figure 102. Fuel Primer System Installation

FIGURE AND INDEX NO.	PART NUMBER	DESCRIPTION 1 2 3 4 5 6 7	UNITS PER ASSY	USABLE ON CODE
102-		FUEL PRIMER SIX LINE SYSTEM INSTALLATION ----------	NP	A
		FUEL PRIMER FIVE LINE SYSTEM INSTALLATION ----------	NP	B
- 1	0750125-1	LINE ASSEMBLY-CYLINDER 2 TO DISTRIBUTOR ----------	1	
		ATTACHING PARTS		
	AN4022-1	JET-FUEL ----------	1	
	AN780-2	NIPPLE----------	1	
		---*---		
- 2	0750125-2	LINE ASSEMBLY-CYLINDER 1 AND 5 TO DISTRIBUTOR----------	2	A
		ATTACHING PARTS		
	AN4022-1	JET-FUEL ----------	1	A
	AN780-2	NIPPLE----------	1	A
		---*---		
	0750125-2	LINE ASSEMBLY-CYLINDER 5 TO DISTRIBUTOR ----------	1	B
		ATTACHING PARTS		
	AN4022-1	JET-FUEL ----------	1	B
	AN780-2	NIPPLE----------	1	B
		---*---		
- 3	0750125-3	LINE ASSEMBLY-CYLINDER 6 TO DISTRIBUTOR ----------	1	
		ATTACHING PARTS		
- 4	AN4022-1	JET-FUEL ----------	1	
- 5	AN780-2	NIPPLE----------	1	
		---*---		
- 6	0750125-4	LINE ASSEMBLY-CYLINDER 3 AND 4 TO DISTRIBUTOR----------	2	
		ATTACHING PARTS		
	AN4022-1	JET-FUEL ----------	1	
	AN780-2	NIPPLE----------	1	
		---*---		

CONTINUED ON PAGE 279

FIGURE AND INDEX NO.	PART NUMBER	DESCRIPTION 1 2 3 4 5 6 7	UNITS PER ASSY	USABLE ON CODE
102- 7	0500106-173	LINE ASSEMBLY-DISTRIBUTOR TO BAFFLE	1	
		ATTACHING PARTS		
- 8	AN816-2D	NIPPLE	1	
		---*---		
- 9	0750125-5	CLAMP ASSEMBLY-LH	1	
- 10	0750125-6	CLAMP ASSEMBLY-RH	1	
- 11	0750125-7	BRACKET-MOUNTING LH	1	
- 12	0750125-8	BRACKET-MOUNTING RH	1	
- 13	0750125-9	CLAMP	2	
		ATTACHING PARTS		
- 14	AN530-10-6	SCREW	4	
	0750125-11	NUT	4	
		---*---		
- 15	0750125-10	DISTRIBUTOR-FUEL	1	
		ATTACHING PARTS		
	AN5-14A	BOLT	1	
		---*---		
- 16	MS20913-1D	PLUG-DISTRIBUTOR	1	B
		A---180 SERIAL 30000 THRU 32661 & 50220 & ON		
		182 SERIAL 33000 THRU 33842 & 51038 & ON		
		182 SKYLANE SERIAL 51038 & ON		
		B---180 SERIAL 32662 THRU 50219		
		182 SERIAL 33843 THRU 51037		
		NOTE. FOR ACCESSORY KIT LISTINGS REFER TO PAGES 372 THRU 374B		

FIGURE AND INDEX NO.	PART NUMBER	DESCRIPTION 1 2 3 4 5 6 7	UNITS PER ASSY	USABLE ON CODE
103-		CONTROL TEE INSTALLATION	NP	A
- 1	0411221-3	CONTROL TEE ASSEMBLY	1	
		ATTACHING PARTS		
- 2	AN4-31A	BOLT	1	
- 3	AN960-416L	WASHER	1	
- 4	MS20365-428C	NUT	2	
- 5	S-18-30	BUSHING CESSNA STANDARD	1	B
		---*---		
- 6	0411047	SPROCKET-AILERON CHAIN	2	
		ATTACHING PARTS		
- 7	AN3-11A	BOLT	1	
- 8	MS20365-1032C	NUT	1	
		---*---		
- 9	0411255	SHAFT	2	
- 10	AN960-816	WASHER	2	
- 11	AN960A816L	WASHER	AR	
- 12	0411257	UNIVERSAL JOINT	2	
		ATTACHING PARTS		
- 13	AN3-10A	BOLT	1	
- 14	MS20365-1032C	NUT	1	
		---*---		
- 15	0411326-3	MACHINING ASSEMBLY-CONTROL TEE	1	
- 16	F-620	BUSHING-----AXD	4	
- 17	B-610	BEARING-----TOR	2	
- 18	AN200KP4	BEARING	1	
- 19	0413016-4	CONTROL WHEEL ASSEMBLY	2	L
	0713042-1	CONTROL WHEEL ASSEMBLY	2	M
	0713042-6	CONTROL WHEEL ASSEMBLY LH	1	C
	0713042-6	CONTROL WHEEL ASSEMBLY RH	1	C
	0713042-14	CONTROL WHEEL ASSEMBLY LH	1	D
	0713042-14	CONTROL WHEEL ASSEMBLY RH	1	D
	0713042-7	CONTROL WHEEL ASSEMBLY LH	1	E
	0713042-7	CONTROL WHEEL ASSEMBLY RH	1	E
	0713042-10	CONTROL WHEEL ASSEMBLY LH	1	F
	0713042-10	CONTROL WHEEL ASSEMBLY RH	1	F
	0713042-12	CONTROL WHEEL ASSEMBLY LH	1	G
	0713042-12	CONTROL WHEEL ASSEMBLY RH	1	G
	0713042-15	CONTROL WHEEL ASSEMBLY LH	1	H
	0713042-15	CONTROL WHEEL ASSEMBLY RH	1	H
	0713042-16	CONTROL WHEEL ASSEMBLY LH	1	I
	0713042-16	CONTROL WHEEL ASSEMBLY RH	1	I
	0513167-7	CONTROL WHEEL ASSEMBLY LH	1	R
	0513167-7	CONTROL WHEEL ASSEMBLY RH	1	R
	0513167-8	CONTROL WHEEL ASSEMBLY LH	1	Q
	0513167-8	CONTROL WHEEL ASSEMBLY RH	1	Q
	0513167-9	CONTROL WHEEL ASSEMBLY LH	1	P
	0513167-9	CONTROL WHEEL ASSEMBLY RH	1	P
		ATTACHING PARTS		
- 20	AN3-10A	BOLT	1	
- 21	MS20365-1032C	NUT	1	
		---*---		
- 22	0413213-1	TUBE-CONTROL	1	J
	0413213-7	TUBE-CONTROL	1	K
- 23	0413016-3	WHEEL-CONTROL	1	L
	0413042-4	WHEEL ASSEMBLY-CONTROL	1	M
	0713042-8	WHEEL-CONTROL	1	C
	0713042-9	WHEEL-CONTROL	1	E
	0713042-11	WHEEL-CONTROL	1	N
	0713042-13	WHEEL-CONTROL	1	O
	0513168-1	WHEEL-CONTROL	1	S
		ATTACHING PARTS		
- 24	0413216	RIVET	2	T
	0413216	RIVET	1	S
-24A	0413216-4	RIVET	1	S
		---*---		
- 25	0713098-3	MOULDING-WHEEL	1	G
	0713098-4	MOULDING-WHEEL	1	F
		ATTACHING PARTS		
	S-1021Z-4-6	SCREW CESSNA STANDARD	2	
		---*---		

180-182 ALL SERIALS

CONTINUED ON PAGE 281

Flight Controls

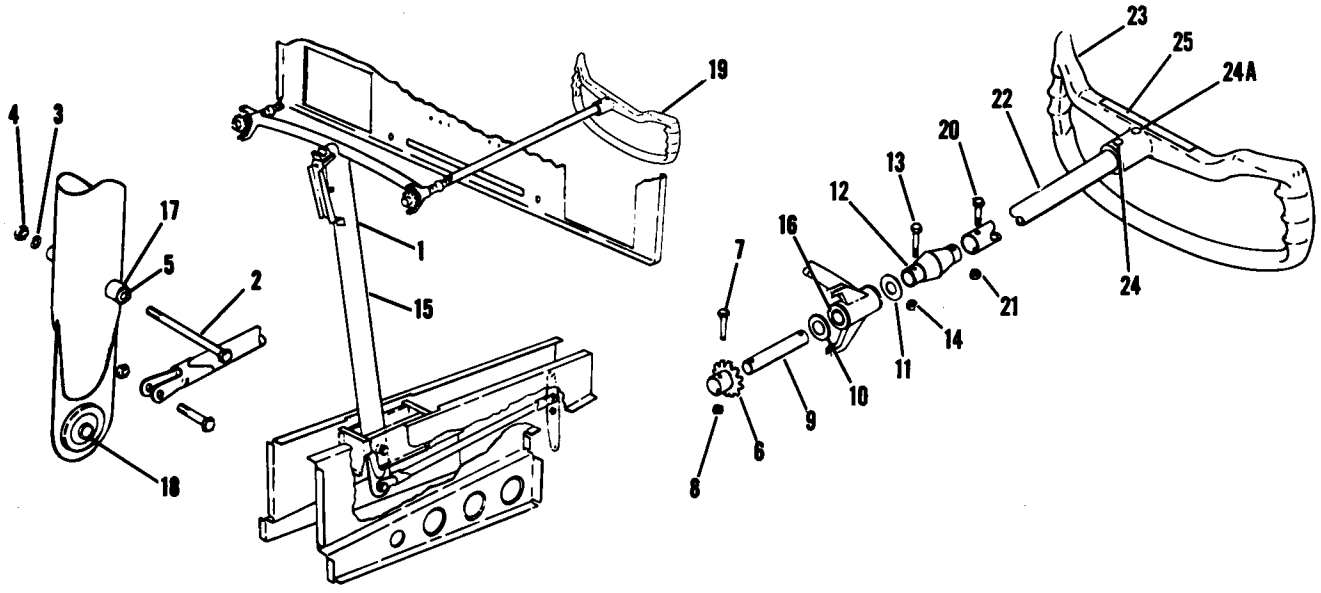

180-182 ALL SERIALS

Figure 103. Control Tee Installation

FIGURE AND INDEX NO.	PART NUMBER	DESCRIPTION 1 2 3 4 5 6 7	UNITS PER ASSY	USABLE ON CODE
103-	0713206-2	MEDALLION-WHEEL ----------	1	H
	0713206-3	MEDALLION-WHEEL ----------	1	I
	0713206-4	MEDALLION-WHEEL ----------	1	D
	0713216-2	EMBLEM-SCOTCHCAL ----------	1	Q
	0713215-2	EMBLEM-SCOTCHCAL ----------	1	P
	0713217-2	EMBLEM-SCOTCHCAL ----------	1	R
		A---180 SERIAL 30000 & ON 182 SERIAL 33000 & ON B---180 SERIAL 30000 & ON C---180 SERIAL 32151 THRU 50355 D---180 SERIAL 50356 THRU 50661 E---182 SERIAL 33000 THRU 34753 F---182 SERIAL 34754 THRU 51556 G---182 SKYLANE SERIAL 34754 THRU 51556 H---182 SERIAL 51557 THRU 52358 I---182 SKYLANE SERIAL 51557 THRU 52358 J---180 SERIAL 32151 THRU 50105 K---180 SERIAL 50106 & ON 182 SERIAL 34754 & ON L---180 SERIAL 30000 THRU 30639 M---180 SERIAL 30640 THRU 32150 N---182 SERIAL 34754 THRU 51556 O---180 SERIAL 50356 THRU 50661 182 SERIAL 51557 THRU 52358 P---182 SKYLANE SERIAL 52359 & ON Q---182 SERIAL 52359 & ON R---180 SERIAL 50662 & ON S---180 SERIAL 50662 & ON 182 SERIAL 52359 & ON T---180 SERIAL 30000 THRU 50661 182 SERIAL 33000 THRU 52358 NOTE. FOR ACCESSORY KIT LISTINGS REFER TO PAGES 372 THRU 374B		

FIGURE AND INDEX NO.	PART NUMBER	DESCRIPTION 1 2 3 4 5 6 7	UNITS PER ASSY	USABLE ON CODE
104-		RUDDER CONTROL SYSTEM INSTALLATION	NP	A
- 1	0510105-26	CABLE-RUDDER CONTROL	2	
- 2	AN155B-32S	BARREL-CABLE	2	
- 3	AN161-32RS	FORK-CABLE	2	
		ATTACHING PARTS		
- 4	AN23-10	BOLT	1	
- 5	AN310-3	NUT	1	
- 6	MS24665-134	PIN-COTTER	1	
- 7	AN24-12	BOLT	1	
- 8	AN310-4	NUT	1	
- 9	MS24665-132	PIN-COTTER	1	
		---*---		
- 10	S-378-4	PULLEY-----CESSNA STANDARD	2	
		ATTACHING PARTS		
- 11	AN4-14A	BOLT	1	
- 12	AN960-416L	WASHER	1	
- 13	MS20365-428C	NUT	1	
		---*---		
- 14	S-378-3L	PULLEY-----CESSNA STANDARD	2	
		ATTACHING PARTS		
- 15	AN4-10A	BOLT	1	
- 16	AN960-A416	WASHER	1	
- 17	MS20365-428C	NUT	1	
		---*---		
- 18	S-378-4	PULLEY-----CESSNA STANDARD	2	
		ATTACHING PARTS		
- 19	AN4-10A	BOLT	1	
- 20	AN960-416L	WASHER	1	
- 21	MS20365-428C	NUT	1	
		---*---		
- 22	S-338-6	FAIRLEAD CESSNA STANDARD	2	
- 23	0712304-7	FITTING-TAILWHEEL STEERING	2	
- 24	MS24665-134	PIN-COTTER	1	
- 25	MS24665-283	PIN-COTTER	3	
- 26	MS24665-355	PIN-COTTER	1	
	0510105-126	CABLE-RUDDER CONTROL STAINLESS STEEL LH	1	

180 SERIAL 30000 THRU 32150

A---180 SERIAL 30000 THRU 32150

Flight Controls (Cont)

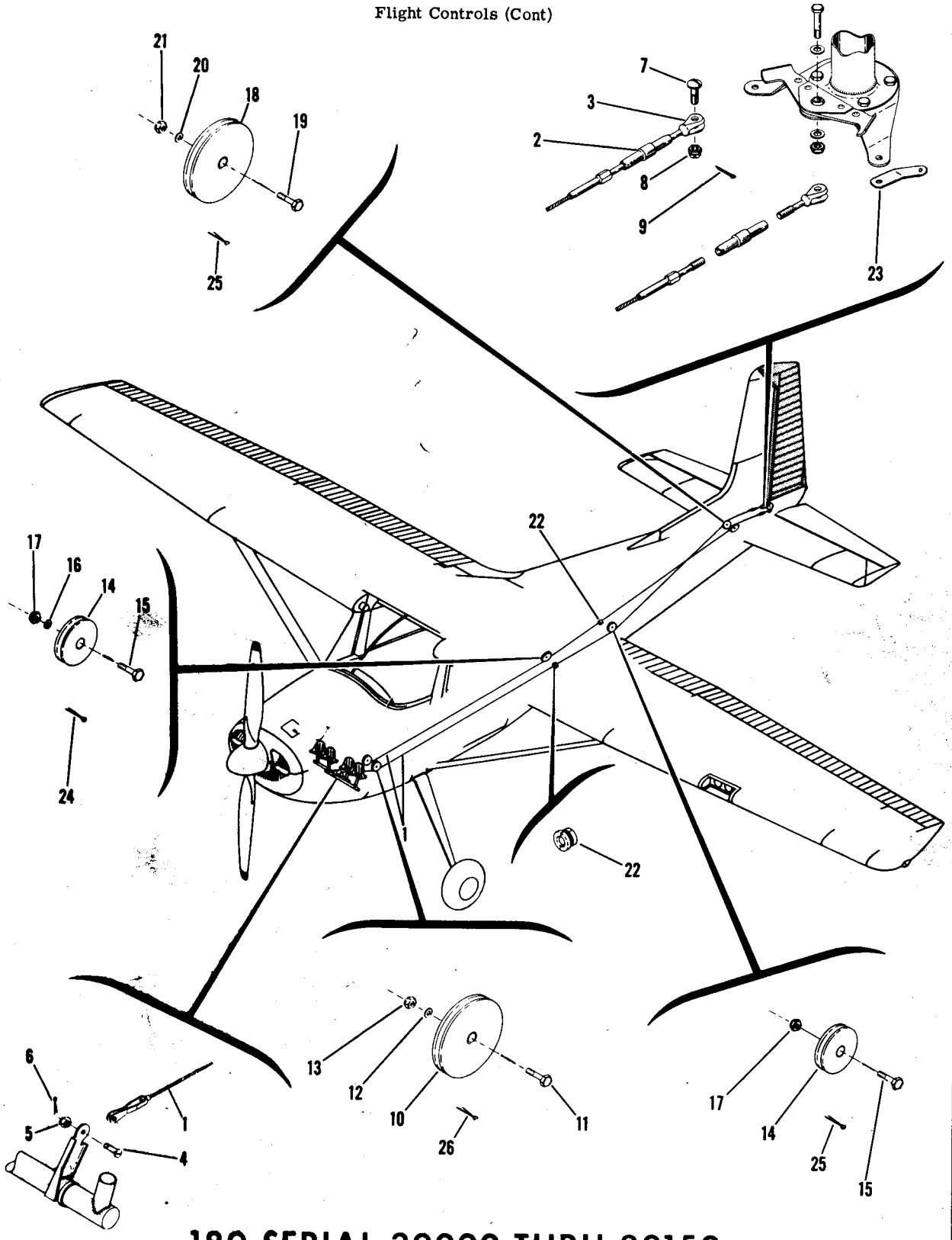

180 SERIAL 30000 THRU 32150

Figure 104. Rudder Control System Installation

Flight Controls (Cont)

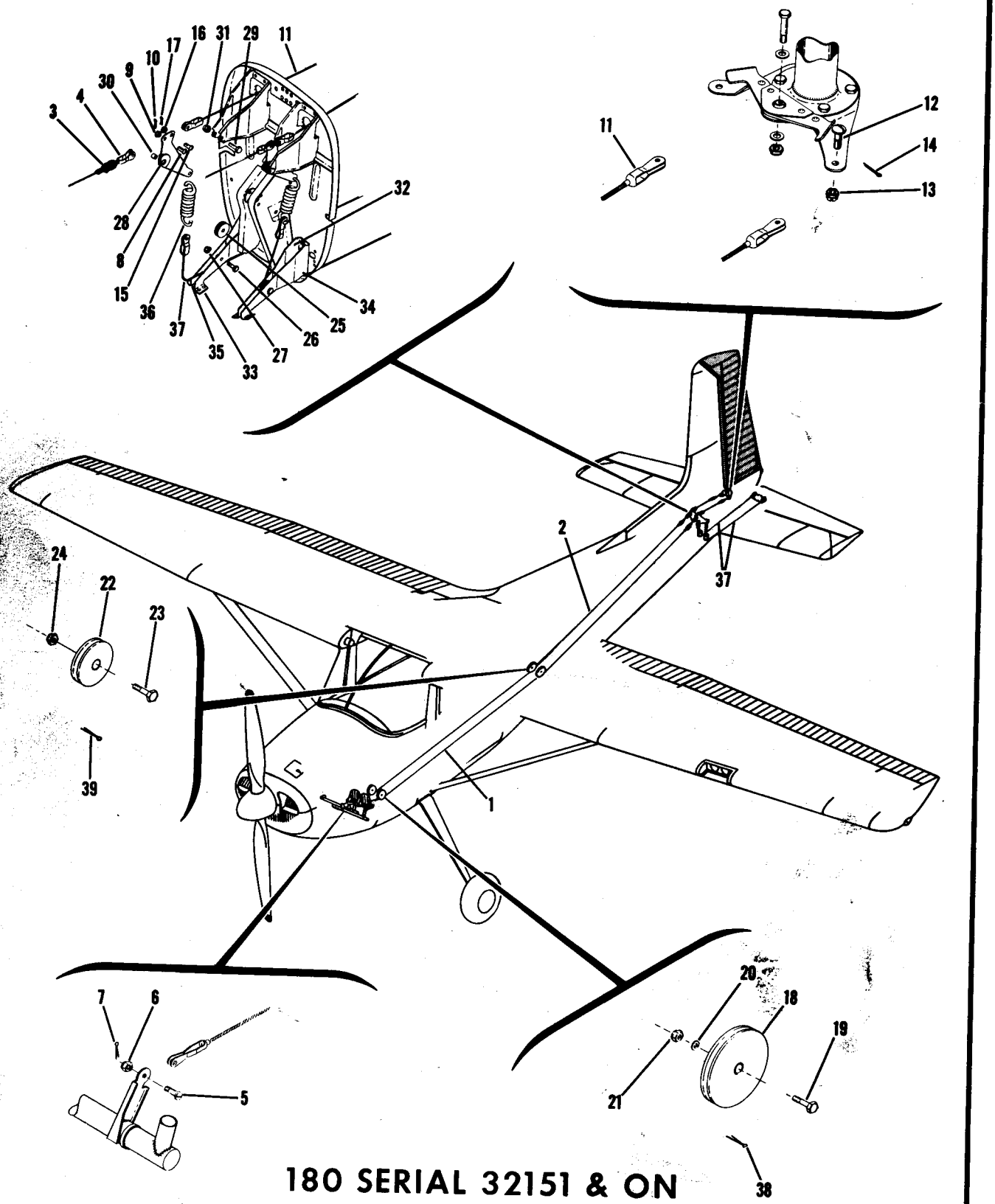

180 SERIAL 32151 & ON

Figure 105. Rudder Control System Installation

FIGURE AND INDEX NO.	PART NUMBER	DESCRIPTION 1 2 3 4 5 6 7	UNITS PER ASSY	USABLE ON CODE
105-		RUDDER CONTROL SYSTEM INSTALLATION	NP	A
- 1	0510105-51	CABLE-FORWARD RUDDER CONTROL LH	1	
- 2	0510105-71	CABLE-FORWARD RUDDER CONTROL RH	1	
- 3	AN155B-32S	BARREL-CABLE	2	
- 4	AN161-22RS	FORK-CABLE	2	
		ATTACHING PARTS		
- 5	AN23-10	BOLT	1	
- 6	AN310-3	NUT	1	
- 7	MS24665-134	PIN-COTTER	1	
- 8	AN23-11	BOLT	1	
- 9	AN310-3	NUT	1	
- 10	MS24665-132	PIN-COTTER	1	
		---*---		
- 11	0510105-52	CABLE-AFT RUDDER CONTROL	2	
		ATTACHING PARTS		
- 12	AN24-12	BOLT	1	
- 13	AN310-4	NUT	1	
- 14	MS24665-132	PIN-COTTER	1	
- 15	AN23-11	BOLT	1	
- 16	AN310-3	NUT	1	
- 17	MS24665-134	PIN-COTTER	1	
		---*---		
- 18	S-378-4	PULLEY-----CESSNA STANDARD	2	
		ATTACHING PARTS		
- 19	AN4-14A	BOLT	1	
- 20	AN960-416L	WASHER	1	
- 21	MS20365-428C	NUT	1	
		---*---		
- 22	S-378-3	PULLEY-----CESSNA STANDARD	2	
		ATTACHING PARTS		
- 23	AN4-10A	BOLT	1	
- 24	MS20365-428C	NUT	1	
		---*---		
- 25	S-378-4	PULLEY-----CESSNA STANDARD	2	
		ATTACHING PARTS		
- 26	AN4-10A	BOLT	1	
- 27	MS20365-428C	NUT	1	
		---*---		
- 28	0712309-1	BELLCRANK ASSEMBLY-TAILWHEEL STEERING	2	
		ATTACHING PARTS		
- 29	AN4-10A	BOLT	1	
- 30	0411489	BUSHING	1	
- 31	MS20365-428C	NUT	1	
		---*---		
- 32	0712309-5	BRACKET-INBOARD LH	1	
- 33	0712309-6	BRACKET-INBOARD RH	1	
- 34	0712309-7	BRACKET-OUTBOARD LH	1	
- 35	0712309-8	BRACKET-OUTBOARD RH	1	
- 36	0742200-5	SPRING-TAILWHEEL STEERING	2	
- 37	0510105-153	CABLE-TAILWHEEL STEERING	2	
- 38	MS24665-136	PIN-COTTER	2	
- 39	MS24665-355	PIN-COTTER	1	
	0510105-151	CABLE-FORWARD RUDDER CONTROL LH STAINLESS STEEL	1	
	0510105-171	CABLE-FORWARD RUDDER CONTROL RH STAINLESS STEEL	1	
	0510105-152	CABLE-AFT RUDDER CONTROL STAINLESS STEEL	2	

180 SERIAL 32151 & ON

A---180 SERIAL 32151 & ON

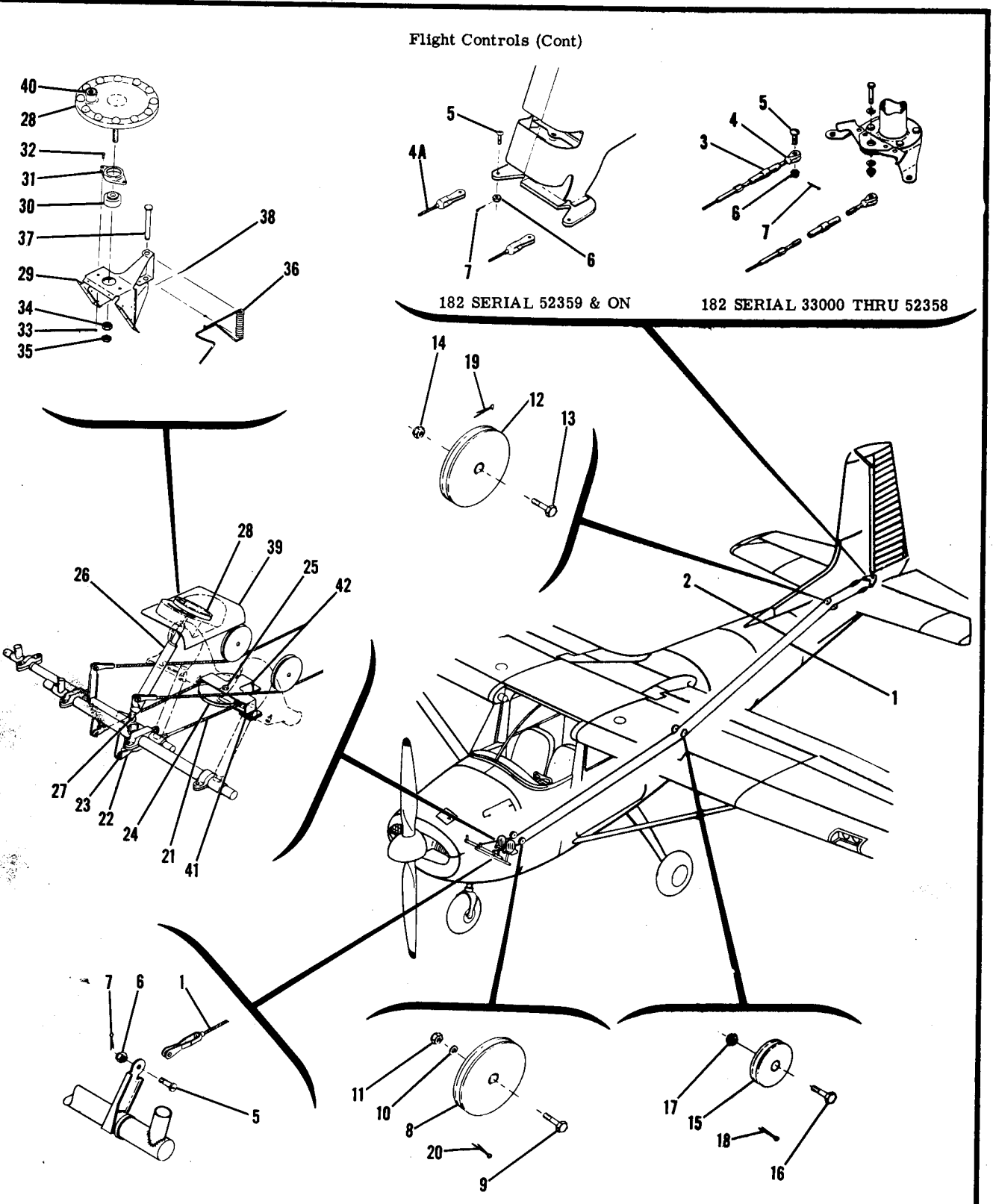

182 ALL SERIALS

Figure 106. Rudder Control System Installation

FIGURE AND INDEX NO.	PART NUMBER	DESCRIPTION 1 2 3 4 5 6 7	UNITS PER ASSY	USABLE ON CODE
106-		RUDDER CONTROL SYSTEM INSTALLATION	NP	A
- 1	0510105-26	CABLE-RUDDER CONTROL LH	1	C
	0510105-77	CABLE-RUDDER CONTROL LH	1	D
- 2	0510105-66	CABLE-RUDDER CONTROL RH	1	C
	0510105-78	CABLE-RUDDER CONTROL RH	1	D
- 3	AN155R-32S	BARREL-CABLE	2	
- 4	AN161-22RS	FORK-CABLE	2	C
- 4A	1260105-9	CABLE ASSEMBLY-RUDDER AFT	2	D
		ATTACHING PARTS		
- 5	AN23-10	BOLT	2	
- 6	AN310-3	NUT	2	
- 7	MS24665-134	PIN-COTTER	2	
		---*---		
- 8	S-378-4	PULLEY-----CESSNA STANDARD	2	
		ATTACHING PARTS		
- 9	AN4-14A	BOLT	1	
- 10	AN960-416L	WASHER	1	
- 11	MS20365-428C	NUT	1	
		---*---		
- 12	S-378-4	PULLEY-----CESSNA STANDARD	2	
		ATTACHING PARTS		
- 13	AN4-10A	BOLT	1	
- 14	MS20365-428C	NUT	1	
		---*---		
- 15	S-378-3	PULLEY-----CESSNA STANDARD	2	
		ATTACHING PARTS		
- 16	AN4-10A	BOLT	1	
- 17	MS20365-428C	NUT	1	
		---*---		
- 18	MS24665-136	PIN-COTTER	2	
- 19	MS24665-283	PIN-COTTER	2	
- 20	MS24665-355	PIN-COTTER	2	
	0510105-126	CABLE-RUDDER CONTROL LH STAINLESS STEEL	1	C
	0510105-177	CABLE-RUDDER CONTROL LH STAINLESS STEEL	1	D
	0510105-166	CABLE-RUDDER CONTROL RH STAINLESS STEEL	1	C
	0510105-178	CABLE-RUDDER CONTROL RH STAINLESS STEEL	1	D
		SYSTEM INSTALLATION-RUDDER TRIM	NP	B
- 21	0510105-73	CABLE-FORWARD RUDDER CONTROL	1	
	AN155B-32S	BARREL-CABLE	1	
- 22	AN161-22S	FORK-CABLE	1	
		ATTACHING PARTS		
- 23	AN23-11	BOLT	2	
	AN310-3	NUT	2	
	MS24665-134	PIN-COTTER	2	
		---*---		
- 24	S-378-5	PULLEY CESSNA STANDARD	1	
		ATTACHING PARTS		
- 25	AN6-11A	BOLT	1	
	MS20364-624C	NUT	1	
		---*---		
- 26	0713096-1	BUNGEE ASSEMBLY SEE FIGURE 140	1	
		ATTACHING PARTS		
- 27	AN3-10A	BOLT	1	
	AN960D10	WASHER	1	
	MS20365-1032C	NUT	1	
		---*---		
- 28	0713088-3	WHEEL ASSEMBLY	1	
- 29	0713092-1	BRACKET ASSEMBLY	1	
- 30	AN200KS4	BEARING	1	
- 31	0713083-1	CAP	1	
		ATTACHING PARTS		
- 32	AN3-4A	BOLT	2	
- 33	MS20365-1032C	NUT	2	
		---*---		
- 34	AN340-416	NUT	1	
- 35	MS20365-420C	NUT-LOCK	1	
- 36	0713095-1	ARM	1	
		ATTACHING PARTS		
- 37	MS20392-2-53	PIN	1	
- 38	MS24665-132	PIN-COTTER	1	
		---*---		

182 ALL SERIALS

CONTINUED ON PAGE 288

FIGURE AND INDEX NO.	PART NUMBER	DESCRIPTION 1 2 3 4 5 6 7	UNITS PER ASSY	USABLE ON CODE
106- 39	0713093-2-243	COVER-RUDDER TRIM SYSTEM----------	1	
		ATTACHING PARTS		
	S1021Z-8-10	SCREW CESSNA STANDARD ----------	4	
		---*---		
- 40	0713087-1	KNOB----------	1	
		ATTACHING PARTS		
	AN525-10R6	SCREW ----------	1	
		---*---		
- 41	0713086-1	BRACKET ----------	1	
- 42	0713086-2	BRACKET ----------	1	
		A---182 SERIAL 33000 & ON		
		B---182 SERIAL 34754 & ON		
		C---182 SERIAL 33000 THRU 52358		
		D---182 SERIAL 52359 & ON		

FIGURE AND INDEX NO.	PART NUMBER	DESCRIPTION 1 2 3 4 5 6 7	UNITS PER ASSY	USABLE ON CODE
107-		AILERON CONTROL SYSTEM INSTALLATION ----------	NP	
- 1	0510105-16	CABLE-AILERON CONTROL TO TEE ----------	2	
	0510105-116	CABLE-AILERON CONTROL TO TEE STAINLESS STEEL ----------	2	
- 2	0510105-13	CABLE-AILERON CARRY THRU ----------	1	
	0510105-113	CABLE-AILERON CARRY THRU STAINLESS STEEL----------	1	
- 3	0411880	BAR ASSEMBLY-AILERON CARRY THRU ----------	1	
- 4	0411881	TUBE ASSEMBLY-AILERON CARRY THRU ----------	1	
		ATTACHING PARTS		
- 5	MS20365-428C	NUT ----------	1	
		---*---		
- 6	0411051	CHAIN ASSEMBLY ----------	1	
		ATTACHING PARTS		
- 7	AN21-13	BOLT ----------	2	
	AN320-1	NUT ----------	2	
	MS24665-3	PIN-COTTER ----------	2	
		---*---		
- 8	0411051-4	CHAIN-AILERON CONTROL ----------	2	
- 9	AN155B-32S	BARREL-TURNBUCKLE ----------	1	
- 10	NAS288-35LH	TERMINAL ----------	1	
- 11	NAS288-35RH	TERMINAL ----------	1	
- 12	MS20392-1-13	PIN-CLEVIS ----------	2	
	MS24665-130	PIN-COTTER ----------	2	
- 13	S-378-4	PULLEY-----CESSNA STANDARD----------	2	
		ATTACHING PARTS		
- 14	MS20365-428C	NUT ----------	1	
- 15	0411232	GUARD CABLE----------	1	
- 16	AN4-33A	BOLT ----------	1	
		---*---		
- 17	S-378-4	PULLEY-----CESSNA STANDARD----------	2	
		ATTACHING PARTS		
- 18	MS20365-428C	NUT ----------	1	
- 19	0510136	SPACER----------	1	
- 20	0510137	SPACER----------	1	
- 21	AN4-21A	BOLT ----------	1	
		---*---		
- 22	MS20392-1-57	PIN ----------	2	
	MS24665-130	PIN-COTTER ----------	2	
- 23	S-378-4	PULLEY-----CESSNA STANDARD----------	2	
		ATTACHING PARTS		
- 24	MS20365-428C	NUT ----------	1	
- 25	0411489	BUSHING-PULLEY ----------	1	
- 26	AN960-416L	WASHER----------	2	
- 27	AN4-14A	BOLT ----------	1	
		---*---		

180-182 ALL SERIALS

CONTINUED ON PAGE 290

Flight Controls (Cont)

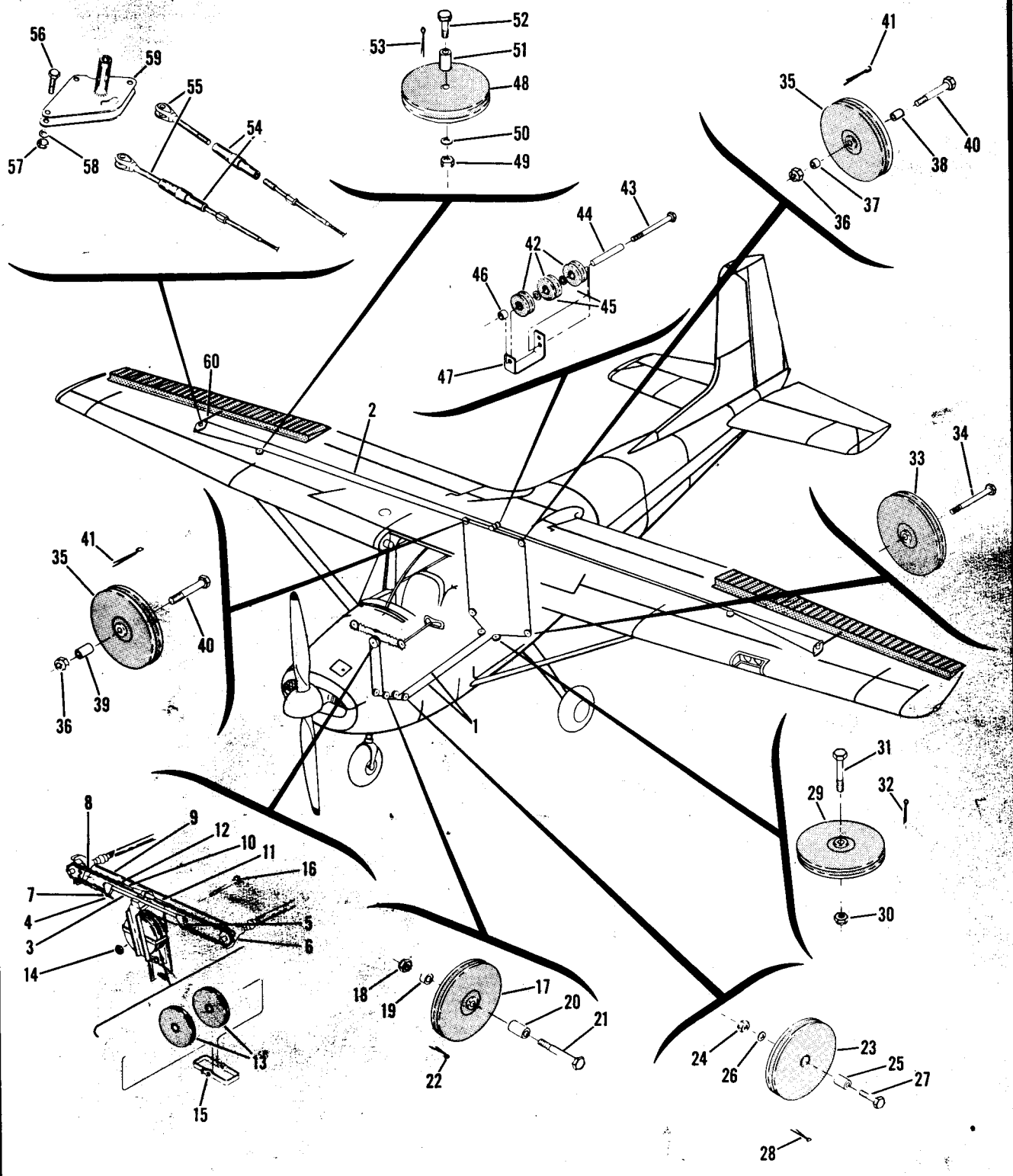

180-182 ALL SERIALS

Figure 107. Aileron Control System Installation

FIGURE AND INDEX NO.	PART NUMBER	DESCRIPTION 1 2 3 4 5 6 7	UNITS PER ASSY	USABLE ON CODE
107- 28	MS24665-355	PIN-COTTER	2	
- 29	S-378-4	PULLEY-----CESSNA STANDARD	2	
		ATTACHING PARTS		
- 30	MS20365-428C	NUT	1	
- 31	AN4-10A	BOLT	1	
		---*---		
- 32	MS24665-140	PIN-COTTER	2	
- 33	S-378-4	PULLEY-----CESSNA STANDARD	2	
		ATTACHING PARTS		
- 34	AN4-21A	BOLT	1	
		---*---		
- 35	S-378-4	PULLEY-----CESSNA STANDARD	2	
		ATTACHING PARTS		
- 36	MS20365-428C	NUT	1	
- 37	NAS43-4-16	SPACER-----LH ONLY	1	
- 38	NAS43-4-28	SPACER-----LH ONLY	1	
- 39	NAS-43-4-42	SPACER-----RH ONLY	1	
- 40	AN4-16A	BOLT	1	
		---*---		
- 41	MS24665-140	PIN-COTTER	2	
- 42	S-394	PULLEY-----CESSNA STANDARD	3	
		ATTACHING PARTS		
- 43	AN3-21A	BOLT	1	
- 44	0512138	BUSHING	1	
- 45	AN960-416	WASHER	1	
- 46	NAS43-4-16	SPACER	1	
- 47	0512136	GUARD-CABLE	1	
		---*---		
- 48	S-378-3L	PULLEY-----CESSNA STANDARD	2	
		ATTACHING PARTS		
- 49	MS20365-428C	NUT	1	
- 50	AN960-10L	WASHER	1	
- 51	NAS382-2	BUSHING	1	
- 52	AN4-10A	BOLT	1	
		---*---		
- 53	MS24665-134	PIN-COTTER	2	
- 54	AN155B-32L	BARREL-TURNBUCKLE	4	
- 55	AN161-32LL	FORK	4	
- 56	AN3-7A	BOLT	4	
- 57	MS20365-1032C	NUT	4	
- 58	AN960-10L	WASHER	4	
- 59	0523223-1	BELLCRANK ASSEMBLY-AILERON RH SEE FIGURE 7	1	
	0523223	BELLCRANK ASSEMBLY-AILERON LH SEE FIGURE 7	1	
- 60	0523218	ROD ASSEMBLY-AILERON PUSH-PULL-----SEE FIGURE 7	2	

FIGURE AND INDEX NO.	PART NUMBER	DESCRIPTION 1 2 3 4 5 6 7	UNITS PER ASSY	USABLE ON CODE
108-		ELEVATOR CONTROL SYSTEM INSTALLATION	NP	
- 1	0510159	BELLCRANK-ELEVATOR FORWARD	1	
		ATTACHING PARTS		
- 2	AN4-10A	BOLT	1	
- 3	MS20365-428C	NUT	1	
		---*---		
- 4	0510161	TUBE-BELLCRANK TO CONTROL TEE	1	
		ATTACHING PARTS		
- 5	AN4-10A	BOLT	2	
- 6	AN960-416	WASHER	2	
- 7	MS20365-428C	NUT	2	
		---*---		
- 8	0510105-24	CABLE-ELEVATOR CONTROL UPPER	1	
	0510105-124	CABLE-ELEVATOR CONTROL STAINLESS STEEL UPPER	1	
- 9	0510105-25	CABLE-ELEVATOR CONTROL LOWER	1	
	0510105-125	CABLE-ELEVATOR CONTROL STAINLESS STEEL LOWER	1	
		ATTACHING PARTS		
- 10	AN23-10	BOLT	2	
- 11	AN310-3	NUT	2	
- 12	MS24665-134	PIN-COTTER	2	
- 13	AN23-10A	BOLT	2	
- 14	MS20365-1032C	NUT	2	
		---*---		
- 15	S-378-3L	PULLEY-CABLE CESSNA STANDARD	1	
		ATTACHING PARTS		
- 16	AN4-10A	BOLT	1	
- 17	MS20365-428C	NUT	1	
		---*---		
- 18	0411421-2	GUARD-CABLE	1	
- 19	S-378-3L	PULLEY-CABLE CESSNA STANDARD	2	
		ATTACHING PARTS		
- 20	0411489	BUSHING	1	
- 21	AN4-14A	BOLT	1	
- 22	AN960-416	WASHER	1	
- 23	MS20365-428C	NUT	1	
- 24	MS24665-140	PIN-COTTER	1	
		---*---		
- 25	AN165-22RS	EYE	2	
- 26	AN155B-32S	BARREL-TURNBUCKLE	2	
	0761202	BELLCRANK ASSEMBLY-ELEVATOR REAR	1	
		ATTACHING PARTS		
- 27	AN4-12A	BOLT	1	
- 28	AN960-416	WASHER	1	
- 29	MS20365-428C	NUT	1	
		---*---		
- 30	0761202-50	BELLCRANK ASSEMBLY-ELEVATOR REAR	1	
- 31	0761202-2	LINK	4	
		ATTACHING PARTS		
- 32	AN24-13	BOLT	1	
- 33	AN310-4	NUT	1	
- 34	MS24665-134	PIN-COTTER	1	
		---*---		
- 35	0510111-9	TUBE-BELLCRANK TO ELEVATOR PYLON	1	C
	0510111-10	TUBE-BELLCRANK TO ELEVATOR PYLON	1	D
		ATTACHING PARTS		
- 36	AN4-10A	BOLT	2	
- 37	MS20365-428C	NUT	2	
		---*---		
- 38	S-338-7	BUSHING CESSNA STANDARD	2	A
		ATTACHING PARTS		
	S-339-2	CLIP CESSNA STANDARD	1	
		---*---		

180-182 ALL SERIALS

CONTINUED ON PAGES 293 & 294

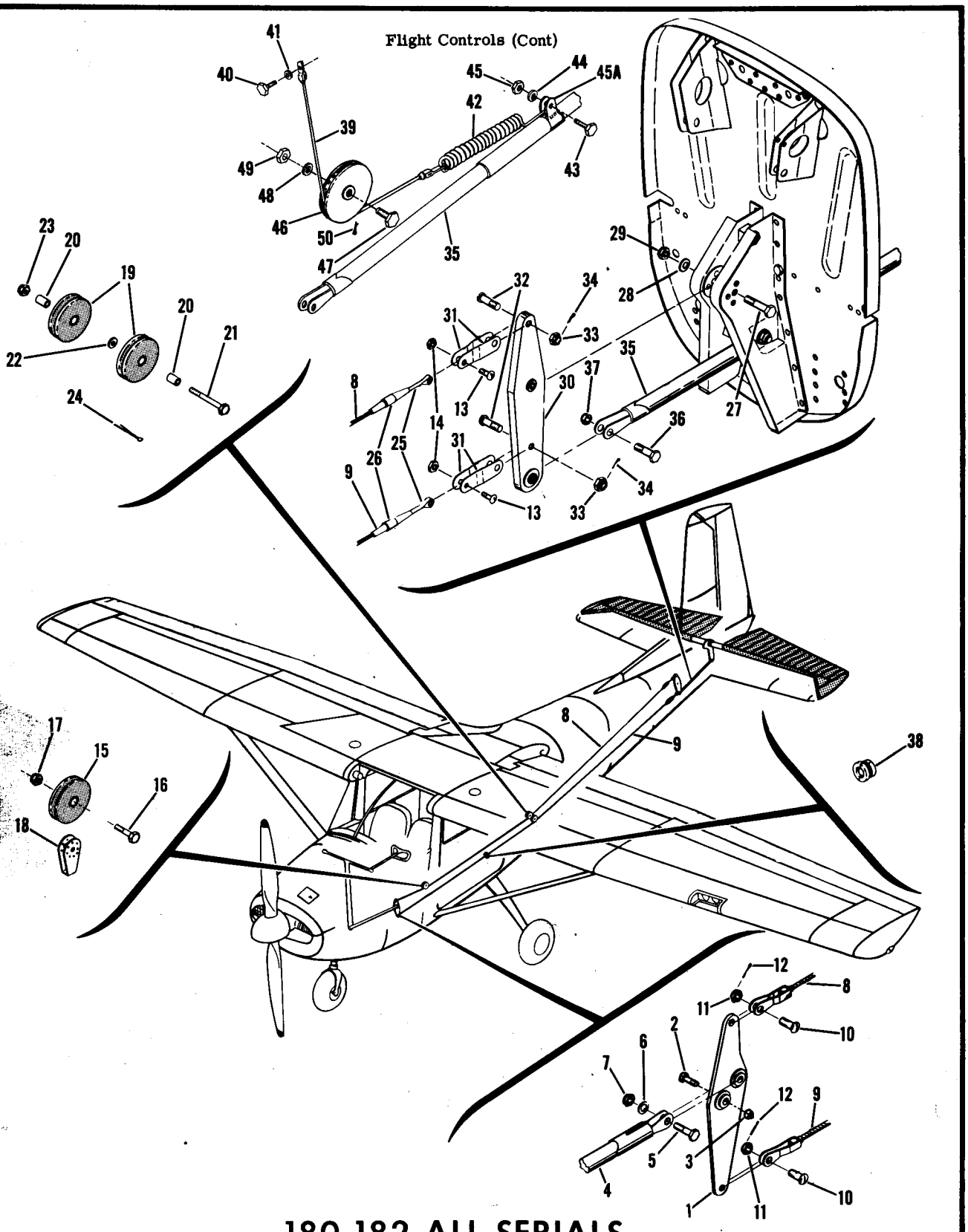

180-182 ALL SERIALS

Figure 108. Elevator Control System Installation

FIGURE AND INDEX NO.	PART NUMBER	DESCRIPTION 1 2 3 4 5 6 7	UNITS PER ASSY	USABLE ON CODE
108- 39	0510105-79	CABLE-ELEVATOR TRIM	1	C
	0510105-179	CABLE-ELEVATOR TRIM STAINLESS STEEL	1	C
	0510105-82	CABLE-ELEVATOR TRIM	1	D
	0510105-182	CABLE-ELEVATOR TRIM STAINLESS STEEL	1	D
		ATTACHING PARTS		
- 40	AN3-4A	BOLT	1	B
- 41	AN960-10	WASHER	1	B
	NAS680A3	NUTPLATE	1	B
- 42	1260016-1	SPRING	1	B
- 43	AN3-6A	BOLT	2	B
- 44	AN960-10	WASHER	4	B
- 45	MS20365-1032C	NUT	2	B
-45A	AN741T5	CLAMP	2	D
		---*---		
- 46	S-378-2	PULLEY-----CESSNA STANDARD	1	B
		ATTACHING PARTS		
- 47	AN3-6A	BOLT	1	B
- 48	AN960-10	WASHER	1	B
- 49	MS20365-1032C	NUT	1	B
		---*---		
- 50	MS24665-134	PIN-COTTER	2	B

A---182 SERIAL 33000 & ON
B---180 SERIAL 50662 & ON
182 SERIAL 52359 & ON
C---180 SERIAL 50662 THRU 50744 & 50746 THRU 50747
182 SERIAL 33000 THRU 52611 & 52613
D---180 SERIAL 50745 & 50748 & ON
182 SERIAL 52612 & 52614 & ON

Flight Controls (Cont)

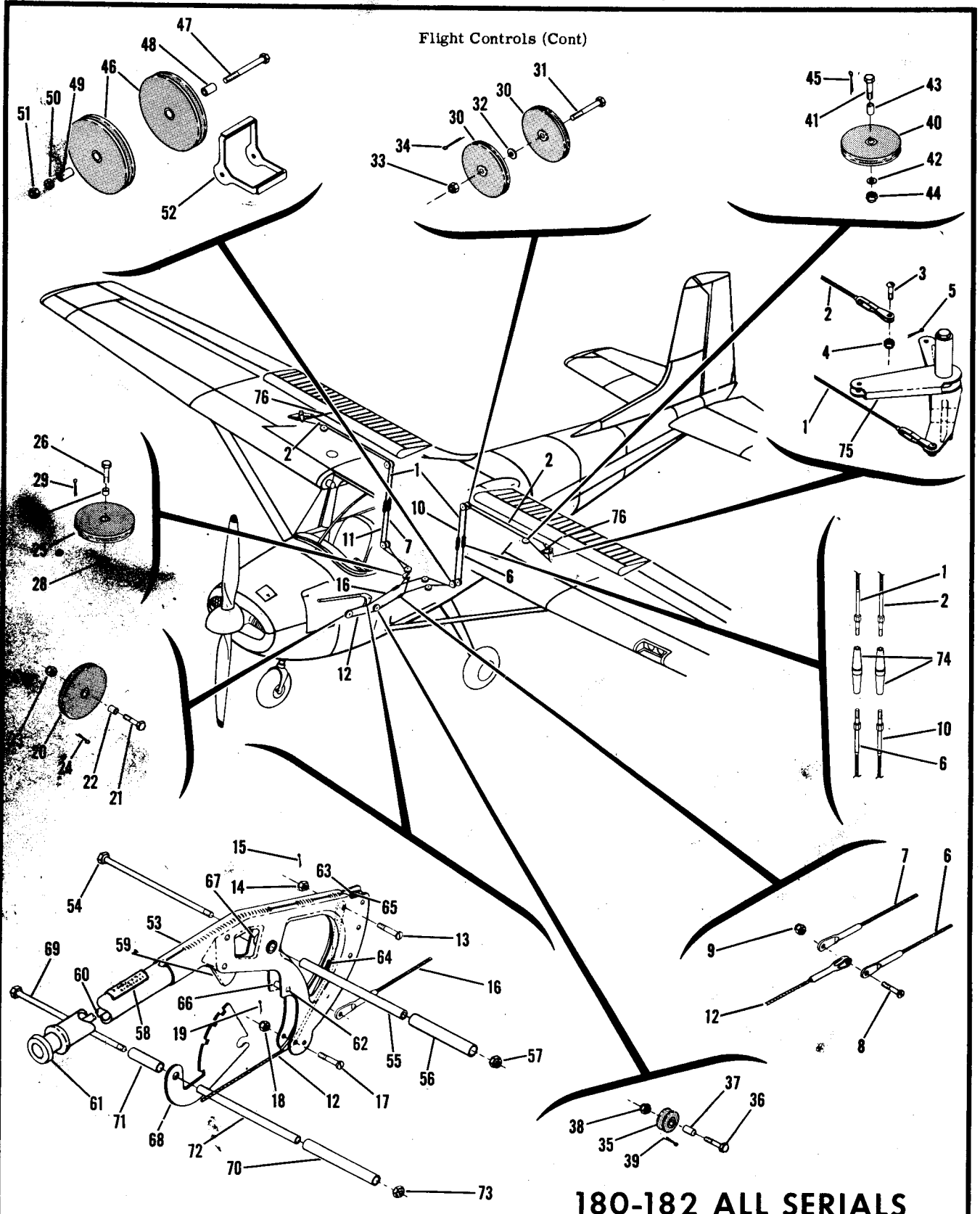

180-182 ALL SERIALS

Figure 109. Flap Control System Installation

FIGURE AND INDEX NO.	PART NUMBER	DESCRIPTION	UNITS PER ASSY	USABLE ON CODE
		1 2 3 4 5 6 7		
109-		FLAP CONTROL SYSTEM INSTALLATION	NP	
- 1	0510105-59	CABLE-FLAP DIRECT OUTBOARD	2	
	0510105-159	CABLE-FLAP DIRECT OUTBOARD STAINLESS STEEL	2	
- 2	0510105-60	CABLE-FLAP RETURN OUTBOARD	2	
	0510105-160	CABLE-FLAP RETURN OUTBOARD STAINLESS STEEL	2	
		ATTACHING PARTS		
- 3	AN23-9	BOLT	1	
- 4	AN310-3	NUT	1	
- 5	MS24665-134	PIN-COTTER	1	
		---*---		
- 6	0510105-63	CABLE-FLAP RETURN INBOARD LH	1	
	0510105-163	CABLE-FLAP RETURN INBOARD LH STAINLESS STEEL	1	
- 7	0510105-64	CABLE-FLAP RETURN INBOARD RH	1	
	0510105-164	CABLE-FLAP RETURN INBOARD RH STAINLESS STEEL	1	
		ATTACHING PARTS		
- 8	AN23-12	BOLT	1	
- 9	AN310-3	NUT	1	
		---*---		
- 10	0510105-61	CABLE-FLAP DIRECT INBOARD LH	1	
	0510105-161	CABLE-FLAP DIRECT INBOARD LH STAINLESS STEEL	1	
- 11	0510105-62	CABLE-FLAP DIRECT INBOARD RH	1	
	0510105-162	CABLE-FLAP DIRECT INBOARD RH STAINLESS STEEL	1	
		ATTACHING PARTS		
	AN23-12	BOLT	1	
	AN310-3	NUT	1	
		---*---		
- 12	0510105-21	CABLE-FLAP RETURN FORWARD	1	
	0510105-121	CABLE-FLAP RETURN FORWARD STAINLESS STEEL	1	
		ATTACHING PARTS		
- 13	AN23-16	BOLT	1	
- 14	AN310-3	NUT	1	
- 15	MS24665-134	PIN-COTTER	1	
		---*---		
- 16	0510105-22	CABLE-FLAP DIRECT FORWARD	1	
	0510105-122	CABLE-FLAP DIRECT FORWARD STAINLESS STEEL	1	
		ATTACHING PARTS		
- 17	AN23-16	BOLT	1	
- 18	AN310-3	NUT	1	
- 19	MS24665-134	PIN-COTTER	1	
		---*---		
- 20	S-378-2	PULLEY-----CESSNA STANDARD	1	
		ATTACHING PARTS		
- 21	AN3-6A	BOLT	1	
- 22	NAS382-1	BUSHING	1	
- 23	MS20365-1032C	NUT	1	
		---*---		
- 24	MS24665-134	PIN-COTTER	1	
- 25	S-378-2	PULLEY-----CESSNA STANDARD	4	
		ATTACHING PARTS		
- 26	AN3-6A	BOLT	1	
- 27	NAS382-1	BUSHING	1	
- 28	MS20365-1032C	NUT	1	
		---*---		
- 29	MS24665-132	PIN-COTTER	4	
- 30	S-378-2	PULLEY-----CESSNA STANDARD	4	
		ATTACHING PARTS		
- 31	AN3-10A	BOLT	1	
- 32	AN960-416	WASHER	1	
- 33	MS20365-1032C	NUT	1	
		---*---		
- 34	MS24665-136	PIN-COTTER	2	

180-182 ALL SERIALS

CONTINUED ON PAGE 296

FIGURE AND INDEX NO.	PART NUMBER	DESCRIPTION 1 2 3 4 5 6 7	UNITS PER ASSY	USABLE ON CODE
109- 35	S-394	PULLEY-----CESSNA STANDARD----------	1	
		ATTACHING PARTS		
- 36	AN3-6A	BOLT ----------	1	
- 37	0411783	BUSHING ----------	1	
- 38	MS20365-1032C	NUT ----------	1	
		---*---		
- 39	MS24665-134	PIN-COTTER ----------	1	
- 40	S-378-2	PULLEY-----CESSNA STANDARD----------	2	
		ATTACHING PARTS		
- 41	AN3-7A	BOLT ----------	1	
- 42	AN960-10	WASHER----------	1	
- 43	NAS382-1	BUSHING ----------	1	
- 44	MS20365-1032C	NUT ----------	1	
		---*---		
- 45	MS24665-134	PIN-COTTER ----------	2	
- 46	S-378-4	PULLEY-----CESSNA STANDARD----------	4	
		ATTACHING PARTS		
- 47	AN4-21A	BOLT ----------	1	
- 48	NAS382-2	BUSHING ----------	1	
- 49	0512140	BUSHING ----------	1	
- 50	NAS43-4-10	SPACER----------	1	
- 51	MS20365-1032C	NUT ----------	1	
		---*---		
- 52	0512135	GUARD-CABLE----------	2	
- 53	0510166-5	LEVER ASSEMBLY-FLAP ----------	1	
		ATTACHING PARTS		
- 54	AN4-62A	BOLT ----------	1	
- 55	0510178	BUSHING ----------	1	
- 56	NAS43-7-237	SPACER----------	1	
- 57	MS20365-428C	NUT ----------	1	
		---*---		
- 58	0510191	PLACARD ----------	1	
- 59	0510167	LATCH ASSEMBLY-FLAP LEVER ----------	1	
- 60	0510169	ROD-LATCH----------	1	A
	0510169-3	ROD-LATCH----------	1	B
- 61	0510182	BUTTON-RELEASE----------	1	C
	0510193-1	BUTTON-RELEASE----------	1	D
	0510177	BUSHING-LATCH ----------	1	
- 62	AN960-4	WASHER ----------	2	
	0510176	SPRING-LATCH RETURN----------	1	
- 63	0510172-3	CAM-FLAP LEVER----------	1	
- 64	0510172-4	CAM-FLAP LEVER----------	1	
- 65	0510173	SPACER-FLAP LEVER ----------	2	
- 66	NAS42HT-5-36	SPACER-FLAP LEVER ----------	2	
- 67	NAS42-4-16	SPACER-FLAP LEVER ----------	4	
- 68	0510171-1	RATCHET-FLAP LEVER ----------	1	
		ATTACHING PARTS		
- 69	AN4-62A	BOLT ----------	1	
- 70	0510181	SPACER-FLAP LEVER ATTACHMENT ----------	1	
- 71	0510181-1	SPACER-FLAP LEVER ATTACHMENT ----------	1	
- 72	0510184	BUSHING-FLAP LEVER ATTACHMENT ----------	1	
- 73	MS20365-428C	NUT ----------	1	
		---*---		
- 74	AN155B-16S	BARREL-TURNBUCKLE ----------	4	
- 75	0523535	BELLCRANK-LH SEE FIGURE 8 ----------	1	
	0523535-1	BELLCRANK-RH SEE FIGURE 8 ----------	1	
- 76	0523537	ROD ASSEMBLY SEE FIGURE 8 ----------	2	

A---180 SERIAL 30000 THRU 32854
182 SERIAL 33000 THRU 34195
B---180 SERIAL 32855 & ON
182 SERIAL 34196 & ON
C---180 SERIAL 30000 THRU 50661
182 SERIAL 33000 THRU 52358
D---180 SERIAL 50662 & ON
182 SERIAL 52359 & ON

This page intentionally left blank.

Flight Controls (Cont)

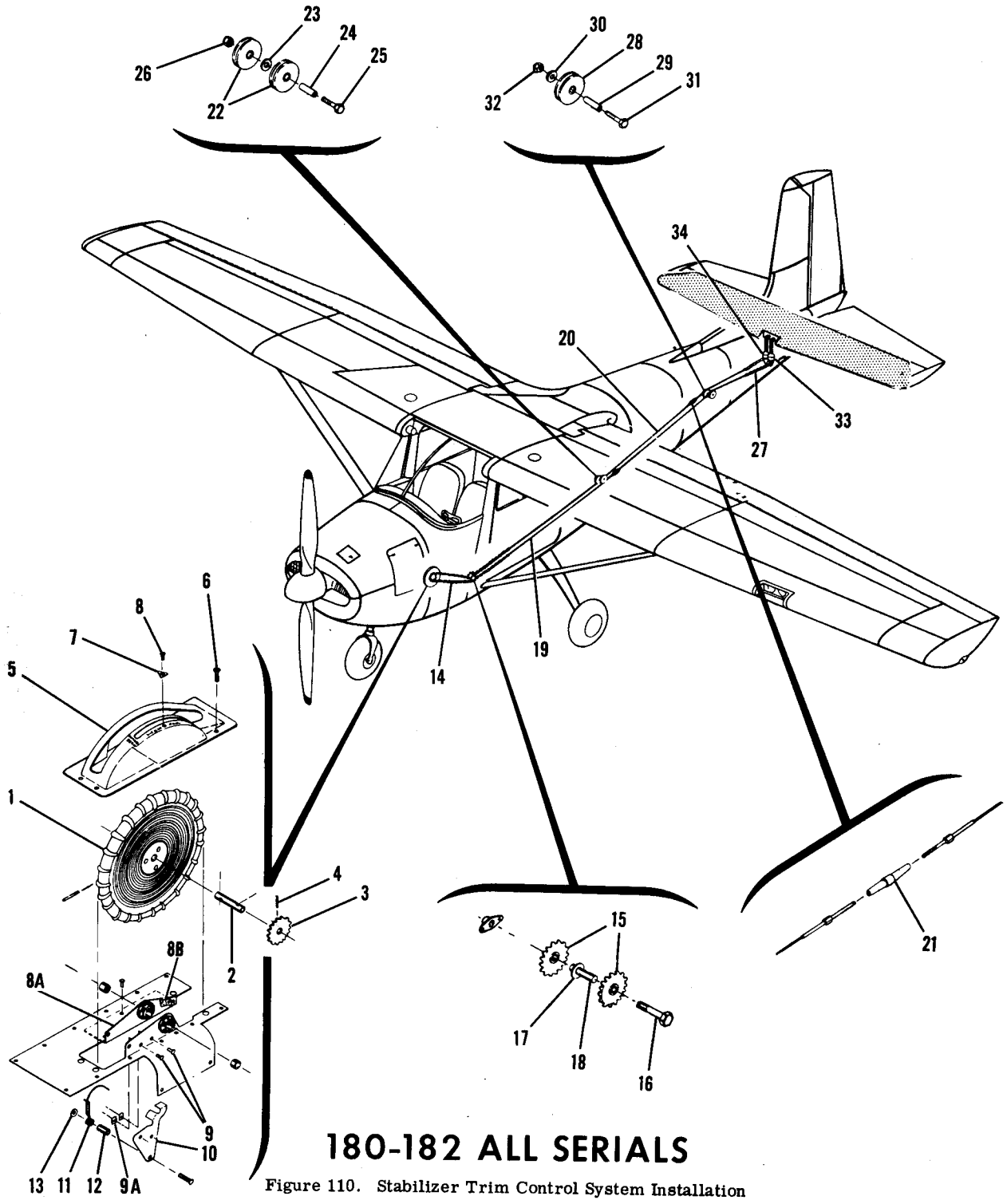

180-182 ALL SERIALS

Figure 110. Stabilizer Trim Control System Installation

FIGURE AND INDEX NO.	PART NUMBER	DESCRIPTION 1 2 3 4 5 6 7	UNITS PER ASSY	USABLE ON CODE
110-		STABILIZER TRIM CONTROL SYSTEM INSTALLATION	NP	
- 1	0761205	WHEEL ASSEMBLY-STABILIZER TRIM	1	
- 2	0761205-2	SHAFT-TRIM WHEEL	1	
- 3	0761210-1	SPROCKET-TRIM WHEEL	1	
		ATTACHING PARTS		
- 4	0761205-3	ROLL-PIN	2	
		---*---		
- 5	0713025-2	COVER ASSEMBLY-TRIM CONTROL WHEEL	1	
		ATTACHING PARTS		
- 6	S-1021Z-6-8	SCREW CESSNA STANDARD	4	
		---*---		
- 7	0713025-1	POINTER-COVER ASSEMBLY	1	
		ATTACHING PARTS		
- 8	S-1021Z-4-4	SCREW CESSNA STANDARD	1	
		---*---		
- 8A	0713023-7	BRACKET ASSEMBLY	1	
- 8B	0713023-3	STOP ASSEMBLY	1	
	0713032	INDICATOR ASSEMBLY-TRIM CONTROL	1	
		ATTACHING PARTS		
- 9	S-1021Z-6-6	SCREW CESSNA STANDARD	2	
- 9A	NAS446-2-3	NUT TIN A1181-6Z-3	2	
		---*---		
- 10	0713032-4	GUARD-CHAIN	1	
- 11	0713032-3	INDICATOR-POINTER	1	
- 12	0713032-1	BUSHING	1	
- 13	0713032-2	COLLAR	1	
- 14	0432138-2	CHAIN-STABILIZER TRIM FORWARD	1	
- 15	0761210-4	SPROCKET ASSEMBLY	2	
		ATTACHING PARTS		
- 16	AN3-12A	BOLT	1	
- 17	AN960-416	WASHER	1	
- 18	0411491-1	BUSHING	1	
		---*---		
- 19	0510105-28	CABLE-STABILIZER TRIM CONTROL FORWARD	2	
	0510105-128	CABLE-STAINLESS STEEL TRIM CONTROL FORWARD	2	
- 20	0510105-29	CABLE-STABILIZER TRIM CONTROL AFT	2	
	0510105-129	CABLE-STAINLESS STEEL TRIM CONTROL AFT	2	
		ATTACHING PARTS		
- 21	AN155B-32S	BARREL	1	
		---*---		
- 22	S-378-1	PULLEY-----CESSNA STANDARD	2	
		ATTACHING PARTS		
- 23	AN960-416L	WASHER	1	
- 24	0411491	BUSHING	1	
- 25	AN3-10A	BOLT	1	
- 26	MS20365-1032C	NUT	1	
		---*---		
- 27	0432138-3	CHAIN-STABILIZER TRIM AFT	1	
- 28	S-378-1	PULLEY-----CESSNA STANDARD	2	
		ATTACHING PARTS		
- 29	NAS382-1	SPACER	1	
- 30	AN960-10L	WASHER	1	
- 31	AN3-6A	BOLT	1	
- 32	MS20365-1032C	NUT	1	
		---*---		
- 33	0712500-1	ACTUATOR ASSEMBLY-STABILIZER LH SEE FIGURE 139	1	
- 34	0712500-2	ACTUATOR ASSEMBLY-STABILIZER RH SEE FIGURE 139	1	
		ATTACHING PARTS		
	AN4-15A	BOLT-UPPER	1	
	AN4-20A	BOLT-LOWER	1	
	MS20365-428C	NUT	2	
		---*---		

180-182 ALL SERIALS

Electrical Equipment

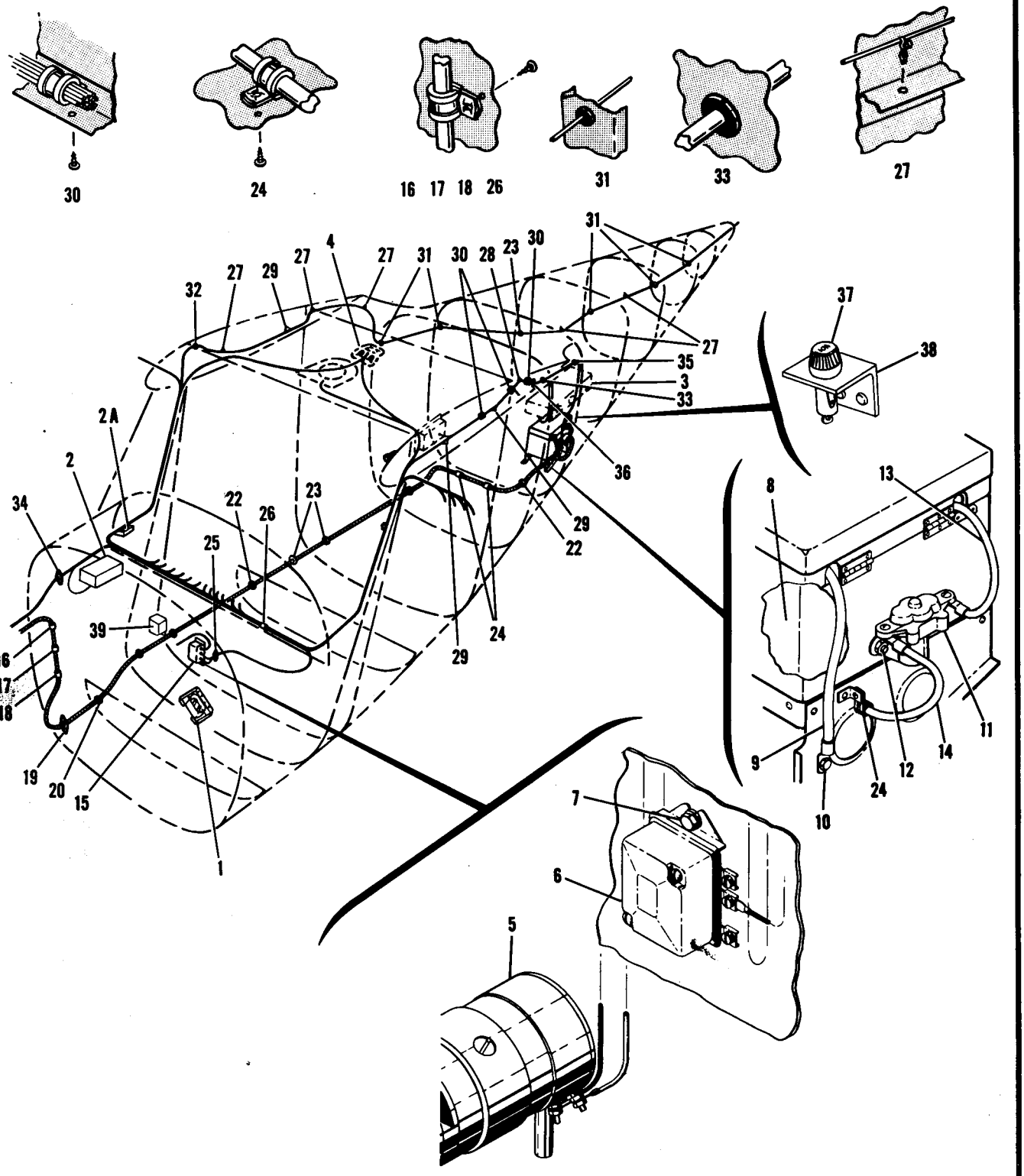

180-182 ALL SERIALS

Figure 111. Fuselage Electrical Equipment Installation

FIGURE AND INDEX NO.	PART NUMBER	DESCRIPTION 1 2 3 4 5 6 7	UNITS PER ASSY	USABLE ON CODE
111-		ELECTRICAL EQUIPMENT INSTALLATION	NP	
- 1		GROUND SERVICE PLUG INSTALLATION SEE FIGURE 111A	NP	
- 2	0511309-1	FLASHER ASSEMBLY NAVIGATION LIGHTS	1	G
		ATTACHING PARTS		
	AN520-416-14	SCREW	3	
	AN960-416L	WASHER	3	
	MS20365-428C	NUT	3	
		---*---		
	0812353-2	CARTRIDGE	1	
	0523119	DETECTOR-NAVIGATION LIGHT FLASHER	2	
- 2A	0713511-1	FLASHER ASSEMBLY-NAVIGATION LIGHTS	1	H
		ATTACHING PARTS		
	S-1021Z-6-6	SCREW CESSNA STANDARD	4	
	NAS446-2-3	NUT	4	
		---*---		
	2N441	TRANSISTOR DRC	2	
- 3		1 1/2 MINUTE FLARES INSTALLATION SEE FIGURE 112	NP	
- 4		CABIN LIGHTS AND SPEAKER INSTALLATION SEE FIGURE 114	NP	
		50 AMP GENERATOR INSTALLATION	NP	
	PDM-50	CIRCUIT BREAKER SPT	1	
		ATTACHING PARTS		
	AN507-632R12	SCREW	2	
		---*---		
- 5	0750140-5	GENERATOR-50 AMP	1	
- 6	0413205-11	REGULATOR-VOLTAGE 50 AMP	1	
		ATTACHING PARTS		
- 7	AN4-6A	BOLT	3	
		---*---		
	627377	PULLEY-V BELT CM	1	
	627273	GENERATOR-35 AMP-----DEG	1	L
- 8	0712604-1	BATTERY-AIRCRAFT	1	
	0712605-1	BATTERY-AIRCRAFT-----ALT	1	
- 9	0412007-1	CABLE-BATTERY GROUND	1	
		ATTACHING PARTS		
- 10	AN4-4A	BOLT	1	
	AN960-416	WASHER	1	
		---*---		
- 11	0712603-2	CONTACTOR ASSEMBLY-MASTER SOLENOID	1	
		ATTACHING PARTS		
- 12	AN3-3A	BOLT	2	
	MS20365-1032C	NUT	2	
		---*---		
	0770657-1	DIODE ASSEMBLY-MASTER SOLENOID	1	
- 13	0700005-18	CABLE BATTERY TO BATTERY SOLENOID	1	
- 14	0700005-17	CABLE BATTERY SOLENOID TO STARTER SOLENOID	1	
- 15	0413205-10	REGULATOR-VOLTAGE 35 AMP	1	L
		ATTACHING PARTS		
	AN4-6A	BOLT	3	
		---*---		
		ROTATING BEACON INSTALLATION SEE FIGURE 113	NP	
- 16	A3046A-7-3	CLAMP TIN	1	
		ATTACHING PARTS		
	NAS444-4	NUT	1	
	S-1021Z-8-6	SCREW CESSNA STANDARD	1	
		---*---		
- 17	A3046A-7-3	CLAMP TIN	1	A
		ATTACHING PARTS		
	NAS444-4	NUT	1	
	S-1021Z-8-6	SCREW CESSNA STANDARD	1	
		---*---		
- 18	A3046A-7-3	CLAMP TIN	1	B
		ATTACHING PARTS		
	NAS444-4	NUT	1	
	S-1021Z-8-24	SCREW CESSNA STANDARD	1	
	NAS43DD-4-56	SPACER	1	
		---*---		
- 19	MS35489-20	GROMMET	1	
	0713003-51	FAIRLEAD	1	
	S-353-1	SHIELD-----CESSNA STANDARD	1	
		ATTACHING PARTS		
	NAS444-4	NUT	1	
	S-1021Z-8-6	SCREW CESSNA STANDARD	1	
		---*---		

CONTINUED ON PAGE 302

180-182 ALL SERIALS

FIGURE AND INDEX NO.	PART NUMBER	DESCRIPTION 1 2 3 4 5 6 7	UNITS PER ASSY	USABLE ON CODE
111- 20	MS35489-19	GROMMET	1	
- 21	MS35489-19	GROMMET	2	D
	MS35489-48	GROMMET	2	C
- 22	MS35489-17	GROMMET	3	
	MS35489-17	GROMMET	1	C
- 23	MS35489-465	GROMMET	2	D
- 24	A3047A7-92	CLAMP TIN	3	
		ATTACHING PARTS		
	S-1021Z-8-6	SCREW CESSNA STANDARD	1	
		---*---		
- 25	MS35489-14	GROMMET	1	
	S-354-4	SHIELD-ASBESTOS CESSNA STANDARD	1	
	S-351-1	SHIELD-----CESSNA STANDARD	2	
		ATTACHING PARTS		
	S-1021Z-8-6	SCREW CESSNA STANDARD	1	
	NAS446-4-3	NUT	1	
		---*---		
- 26	NAS435D8	CLAMP	1	
		ATTACHING PARTS		
	S-1021Z-8-8	SCREW CESSNA STANDARD	1	
		---*---		
- 27	A3493-012-1	CLIP TIN	5	
- 28	A3493-012-1	CLIP TIN	1	C
- 29	A3493-012-1	CLIP TIN	3	D
- 30	MS21919DG6	CLAMP	3	D
		ATTACHING PARTS		
	S-1021Z-8-8	SCREW CESSNA STANDARD	3	
		---*---		
- 31	MS35489-4	GROMMET	5	
- 32	MS35489-4	GROMMET	1	C
- 33	MS35489-4	GROMMET	1	F
	AN931-3-7	GROMMET	1	F
- 34	MS35489-118	GROMMET	2	J
- 35	MS35489-11	GROMMET	1	
	S-354-4	SHIELD-----CESSNA STANDARD	1	
	S-353-1	SHIELD-----CESSNA STANDARD	2	
		ATTACHING PARTS		
	NAS446-4-3	NUT	1	
	S-1021Z-8-6	SCREW CESSNA STANDARD	1	
		---*---		
- 36	1270015-1	STRAP ASSEMBLY	2	E
		ATTACHING PARTS		
	S-1021Z-6-6	SCREW CESSNA STANDARD	2	
		---*---		
- 37	S-1090-18	HOLDER-FUSE-----CESSNA STANDARD	1	K
	S-1091-2	FUSE-2 AMP CESSNA STANDARD	1	K
- 38	0713132-1	BRACKET-FUSE MOUNTING	1	K
- 39	0713130-1	STARTING VIBRATOR	1	K
		ATTACHING PARTS		
	AN3-6A	BOLT	2	
		---*---		

A---180 SERIAL 50356 & ON
B---182 SERIAL 51683 & ON
C---180 SERIAL 30000 & ON
D---182 SERIAL 33000 & ON
E---180 SERIAL 50662 & ON
182 SERIAL 52359 & ON
F---180 SERIAL 30000 THRU 50661
182 SERIAL 33000 THRU 52358
G---180 SERIAL 30000 THRU 50580
182 SERIAL 33000 THRU 52294
H---180 SERIAL 50581 & ON
182 SERIAL 52295 & ON
J---180 SERIAL 50356 & ON
182 SERIAL 51557 & ON
K---180 SERIAL 18050912 & ON
182 SERIAL 18253008 & ON
L---180 SERIAL 30000 THRU 50911
182 SERIAL 33000 THRU 53007

NOTE• FOR ACCESSORY KIT LISTINGS REFER TO PAGES 372 THRU 374B

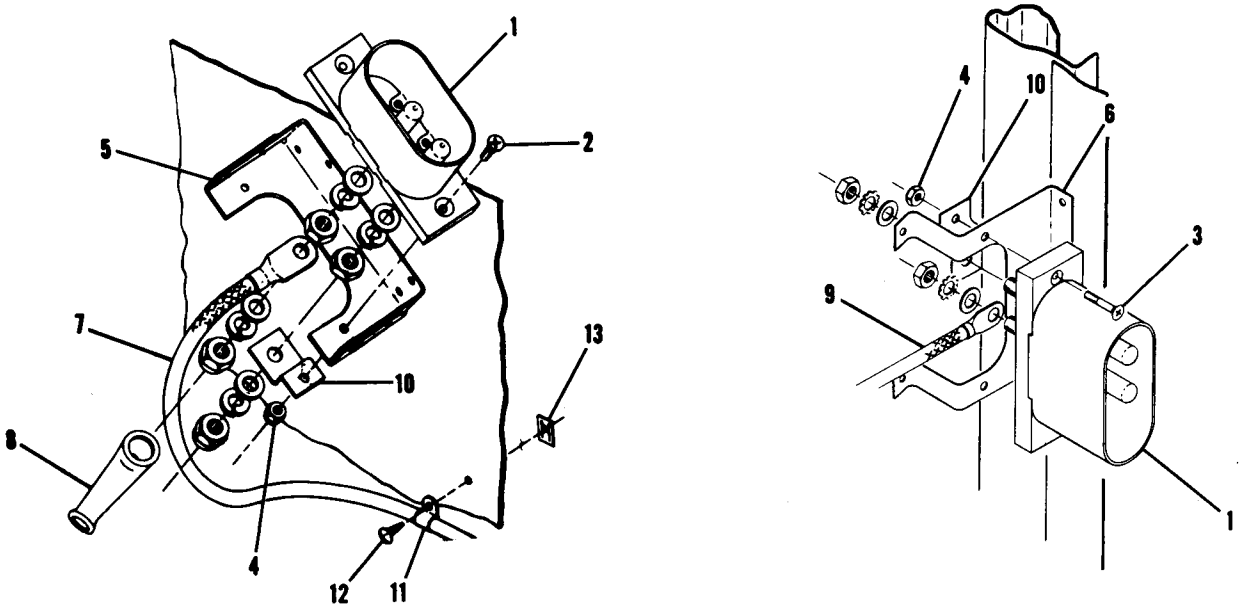

180 SERIAL 30000 THRU 18051022
182 SERIAL 33000 THRU 18253362

Figure 111A. Ground Service Plug Installation

FIGURE AND INDEX NO.	PART NUMBER	DESCRIPTION 1 2 3 4 5 6 7	UNITS PER ASSY	USABLE ON CODE
111A-		GROUND SERVICE PLUG INSTALLATION----------	NP	
- 1	AN2552-3A	RECEPTACLE-GROUND SERVICE PLUG----------	1	
		ATTACHING PARTS		
- 2	AN510-1032R14	SCREW ----------	2	A
- 3	AN509-10R14	SCREW ----------	2	B
- 4	MS20365-1032C	NUT ----------	2	
		---*---		
- 5	0713036-2	BRACKET ASSEMBLY-GROUND SERVICE PLUG ----------	1	A
- 6	0713123-1	MOUNTING BRACKET-GROUND SERVICE PLUG ----------	1	B
- 7	0700005-90	CABLE-GROUND SERVICE PLUG ----------	1	A
- 8	AN781-3	NIPPLE----------	1	A
- 9	0700039-PC2	CABLE-GROUND SERVICE PLUG ----------	1	B
- 10	0312155-10	STRAP-GROUND ----------	1	
- 11	A3046A-8-92	CLAMP TIN ----------	1	A
		ATTACHING PARTS		
- 12	S-1021Z-8-8	SCREW CESSNA STANDARD ----------	1	
- 13	NAS446-4-3	NUT ----------	1	
		---*---		
		A---180 SERIAL 30000 THRU 50676 & 50891 THRU 18051022		
		182 SERIAL 33000 THRU 52477 & 52981 THRU 18253362		
		B---180 SERIAL 50677 THRU 50890		
		182 SERIAL 52478 THRU 52980		
		NOTE. FOR ACCESSORY KIT LISTINGS REFER TO		
		PAGES 372 THRU 374B		

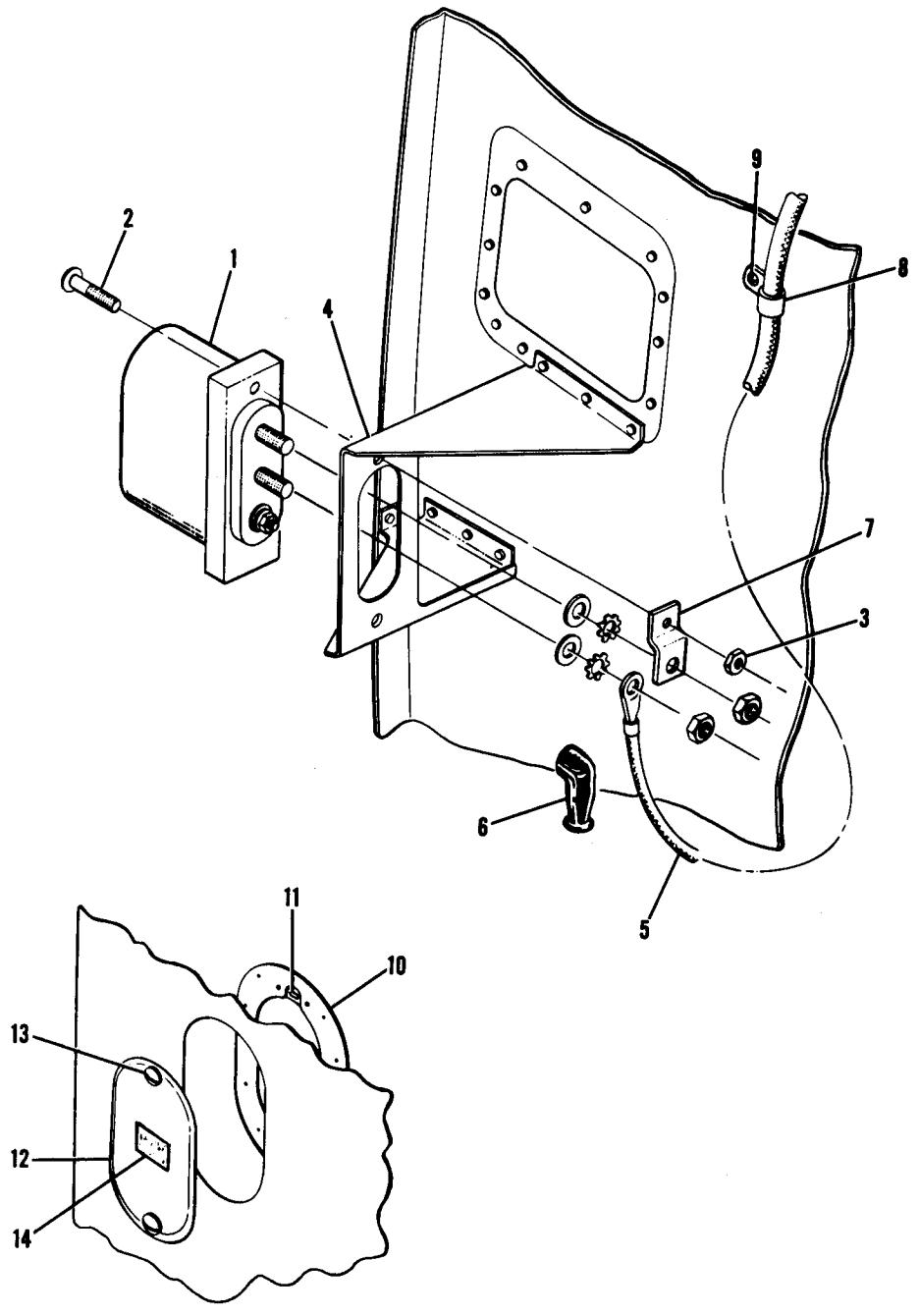

180 SERIAL 18051023 & ON
182 SERIAL 18253363 & ON

Figure 111B. Ground Service Plug Installation

FIGURE AND INDEX NO.	PART NUMBER	DESCRIPTION 1 2 3 4 5 6 7	UNITS PER ASSY	USABLE ON CODE
1118-		GROUND SERVICE PLUG INSTALLATION----------	NP	A
- 1	AN2552-3	RECEPTACLE-GROUND SERVICE PLUG----------	1	
		ATTACHING PARTS		
- 2	AN509-10R14	SCREW ----------	2	
- 3	MS20365-1032C	NUT ----------	2	
		---*---		
- 4	0753016-1	BRACKET --------	1	
- 5	0700039-PC3	CABLE ----------	1	
- 6	MS25171-3S	NIPPLE----------	1	
- 7	0312155-10	STRAP-GROUND ---	1	
- 8	MS21919DG-7	CLAMP ----------	1	
		ATTACHING PARTS		
- 9	S-1021Z-8-8	SCREW ----------	1	
	NAS446-4-3	NUT ----------	1	
		---*---		
- 10	0752610-1	DOUBLER ASSEMBLY----------	1	
- 11	S-1115-19	RECEPTACLE ----------	2	
	AN960-2	WASHER ----------	4	
- 12	0752611-1	DOOR ASSEMBLY ----------	1	
- 13	S-1115-10	STUD----------	2	
	S-1115-20	RING----------	2	
- 14	0500130-1	PLACARD-12 VOLT DC ONLY ----------	1	

180 SERIAL 18051023 & ON
182 SERIAL 18253363 & ON

A---180 SERIAL 18051023 & ON
182 SERIAL 18253363 & ON
S-NOS APPEARING ON THIS PAGE ARE CESSNA STANDARD

Electrical Equipment (Cont)

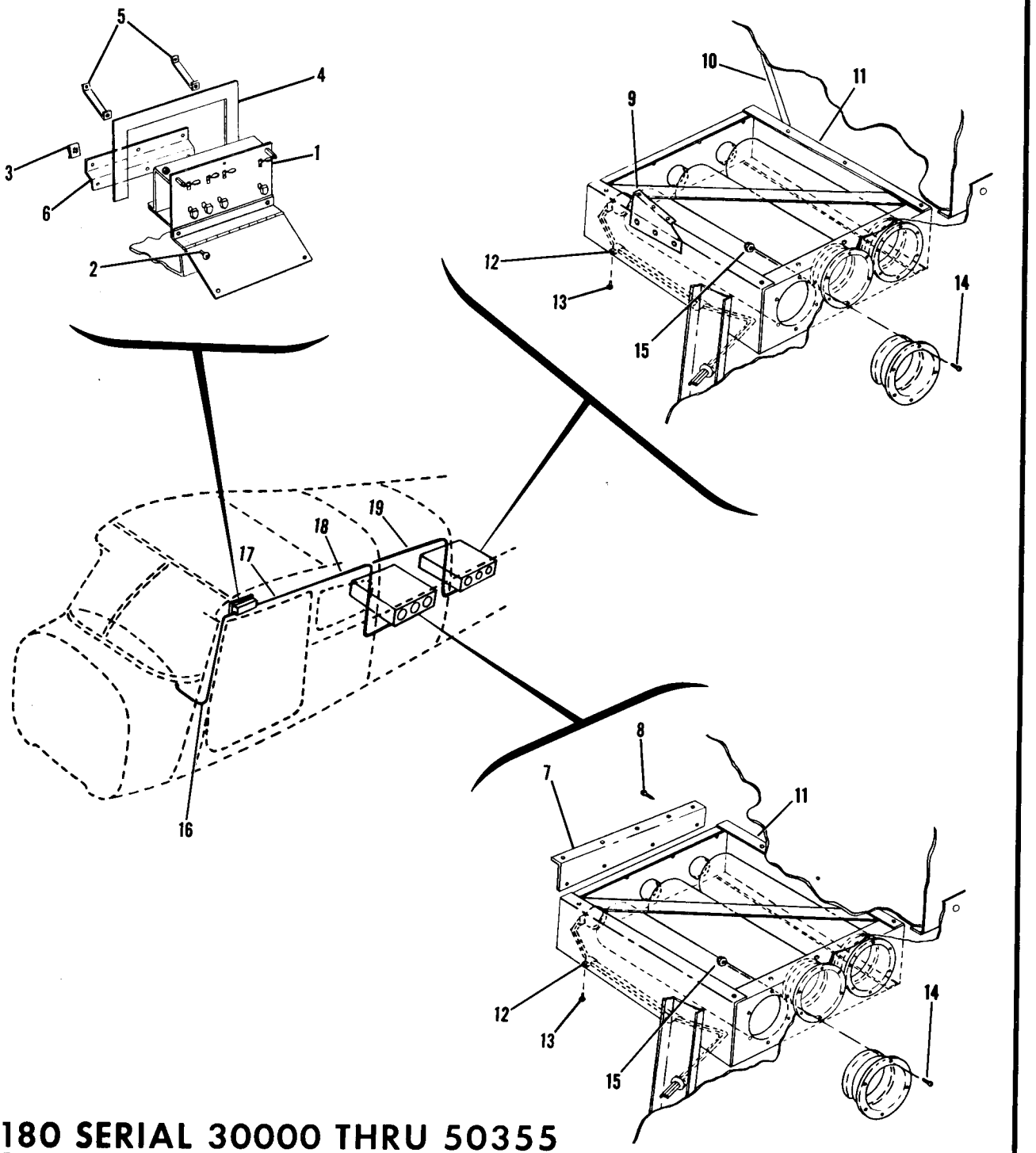

180 SERIAL 30000 THRU 50355
182 SERIAL 33000 THRU 51556

Figure 112. Flare Installation

FIGURE AND INDEX NO.	PART NUMBER	DESCRIPTION 1 2 3 4 5 6 7	UNITS PER ASSY	USABLE ON CODE
112-		FLARES INSTALLATION		
- 1	R-3-M	SWITCH ASSEMBLY-FLARE-----IFS	1	C
		ATTACHING PARTS	1	
- 2	S-1021Z-8-6	SCREW CESSNA STANDARD	8	
- 3	NAS395-1-3	NUT TIN A6187-4Z-3	8	
		---*---		
- 4	0511007-5	BACKING-UPHOLSTERY	1	
- 5	0511007-3	BRACKET-FLARE SWITCH ASSEMBLY-UPPER	2	
- 6	0511007-4	BRACKET-FLARE SWITCH ASSEMBLY-LOWER	1	
- 7	0511007-6	SUPPORT-FLARES	1	A
		ATTACHING PARTS		
- 8	AN545-6-5	SCREW	4	A
		---*---		
- 9	0511007-7	SUPPORT-FLARES	1	B
- 10	0511007-8	BRACE	1	
- 11	1-1/2PF-11	BRACKET ASSEMBLY-FLARE IFS	1	
	1-1/2PF-12	BRACKET-FLARE IFS	1	
	1-1/2-1-A-1	FLARE-1-1/2 MINUTE PARACHUTE-----IFS	3	
- 12	NAS435D4	CLAMP TIN A3047A-4-92	2	
- 13	S-1021Z-8-6	SCREW CESSNA STANDARD	2	
- 14	AN515-6-8	SCREW	18	
- 15	MS20365-632C	NUT	18	
- 16	0700005-42	WIRE	1	
- 17	0700005-39	WIRE	1	
- 18	0700005-40	WIRE	1	
- 19	0700005-41	WIRE	1	

180 SERIAL 30000 THRU 50355

182 SERIAL 33000 THRU 51556

A---180 SERIAL 30000 THRU 30639
B---180 SERIAL 30655 THRU 50355
182 SERIAL 33000 THRU 51556
C---180 SERIAL 30000 THRU 50355
182 SERIAL 33000 THRU 51556
NOTE. FOR ACCESSORY KIT LISTINGS REFER TO PAGES 372 THRU 374B

Electrical Equipment (Cont)

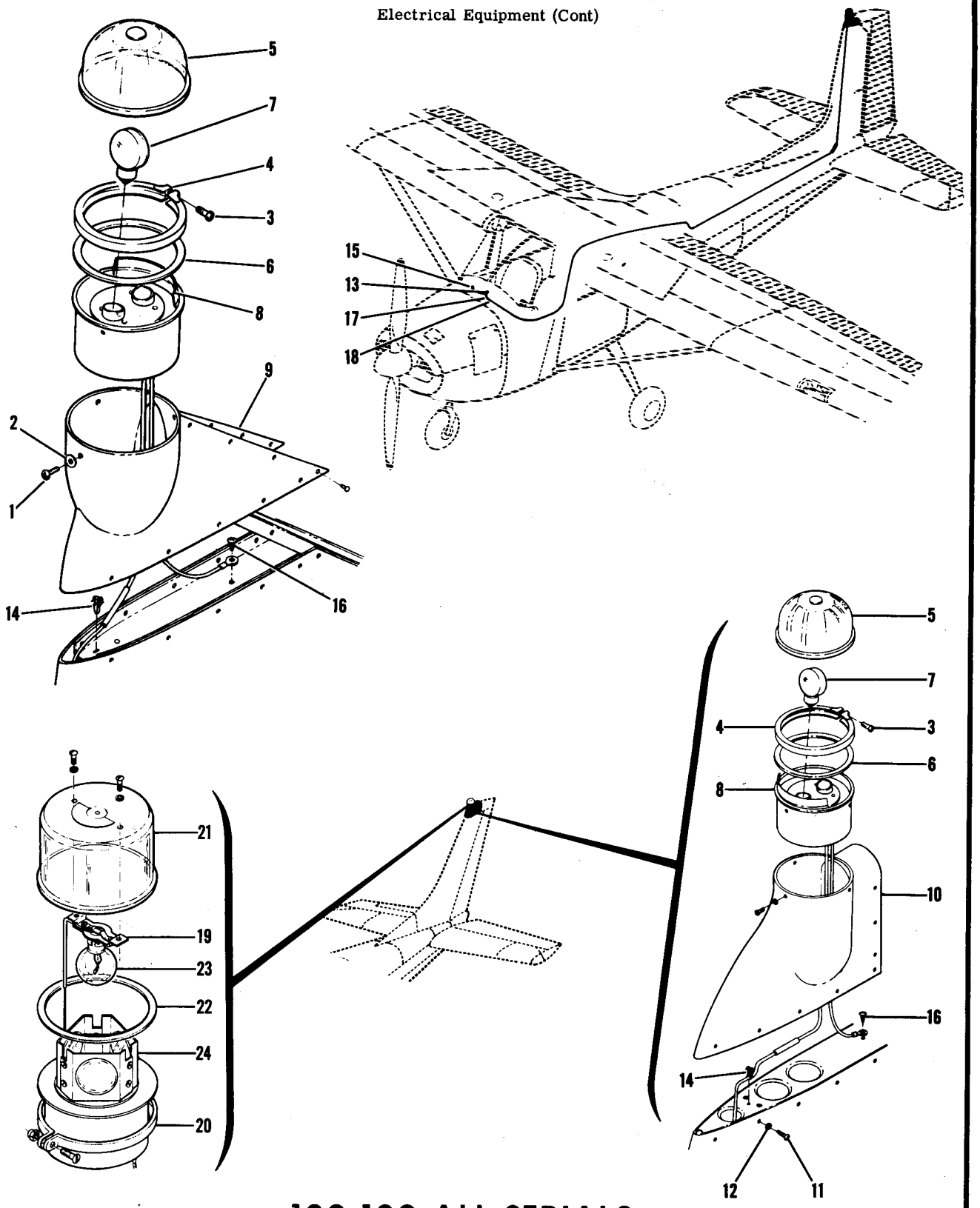

180-182 ALL SERIALS

Figure 113. Rotating Beacon Installation

FIGURE AND INDEX NO.	PART NUMBER	DESCRIPTION 1 2 3 4 5 6 7	UNITS PER ASSY	USABLE ON CODE
113-		ROTATING BEACON INSTALLATION	NP	
	0531003-6	BEACON ASSEMBLY-ROTATING	1	
		ATTACHING PARTS		
- 1	AN515-6R6	SCREW	3	
- 2	AN960-6L	WASHER	3	
		---*---		
- 3	A-7634	SCREW GMC	1	
- 4	A-7635	BAND-LENS RETAINER GMC	1	
- 5	A-7942	LENS-----GMC	1	
- 6	A-7632	GASKET GMC	1	
- 7	11105B	LAMP-REFLECTOR-----GMC	2	
- 8	31111	BAFFLE GMC	1	
- 9	0700031-2	TIP-VERTICAL FIN	1	D
- 10	1200039-1	TIP-SWEPT FIN	1	C
		ATTACHING PARTS		
- 11	AN520-10R6	SCREW	16	
- 12	AN960-C10L	WASHER	16	
		---*---		
- 13	0411092-1	KNOB	1	A
	0713303-2	KNOB	1	B
- 14	A3493-012-1	CLIP	1	
- 15	PSM-10N	CIRCUIT BREAKER MTCC	1	
- 16	AN515-8R6	SCREW	1	
	MS20365-832C	NUT	1	
- 17	0713026-4	SWITCH		
- 18	0700031-3	DECAL	1	A
	0700120-1	BEACON ASSEMBLY-ROTATING ALT	1	
- 19	WRM-15	SOCKET ASSEMBLY WHEL	1	
- 20	WRM-25	CLAMP ASSEMBLY-----WHEL	1	
- 21	WRM-10	DOME ASSEMBLY WHEL	1	
- 22	WRM-30	GASKET-DOME WHEL	1	
- 23	WRM-44-12	BULB-----WHEL	1	
- 24	WRM-20	LENS ASSEMBLY WHEL	1	
	WRM-39	MOTOR WHEL	1	

180-182 ALL SERIALS

A---180 SERIAL 30000 THRU 50355
182 SERIAL 33000 THRU 51556
B---180 SERIAL 50356 & ON
182 SERIAL 51557 & ON
C---182 SERIAL 52359 & ON
D---180 SERIAL 30000 & ON
182 SERIAL 33000 THRU 52358
NOTE. FOR ACCESSORY KIT LISTINGS REFER TO PAGES 372 THRU 374B

Electrical Equipment (Cont)

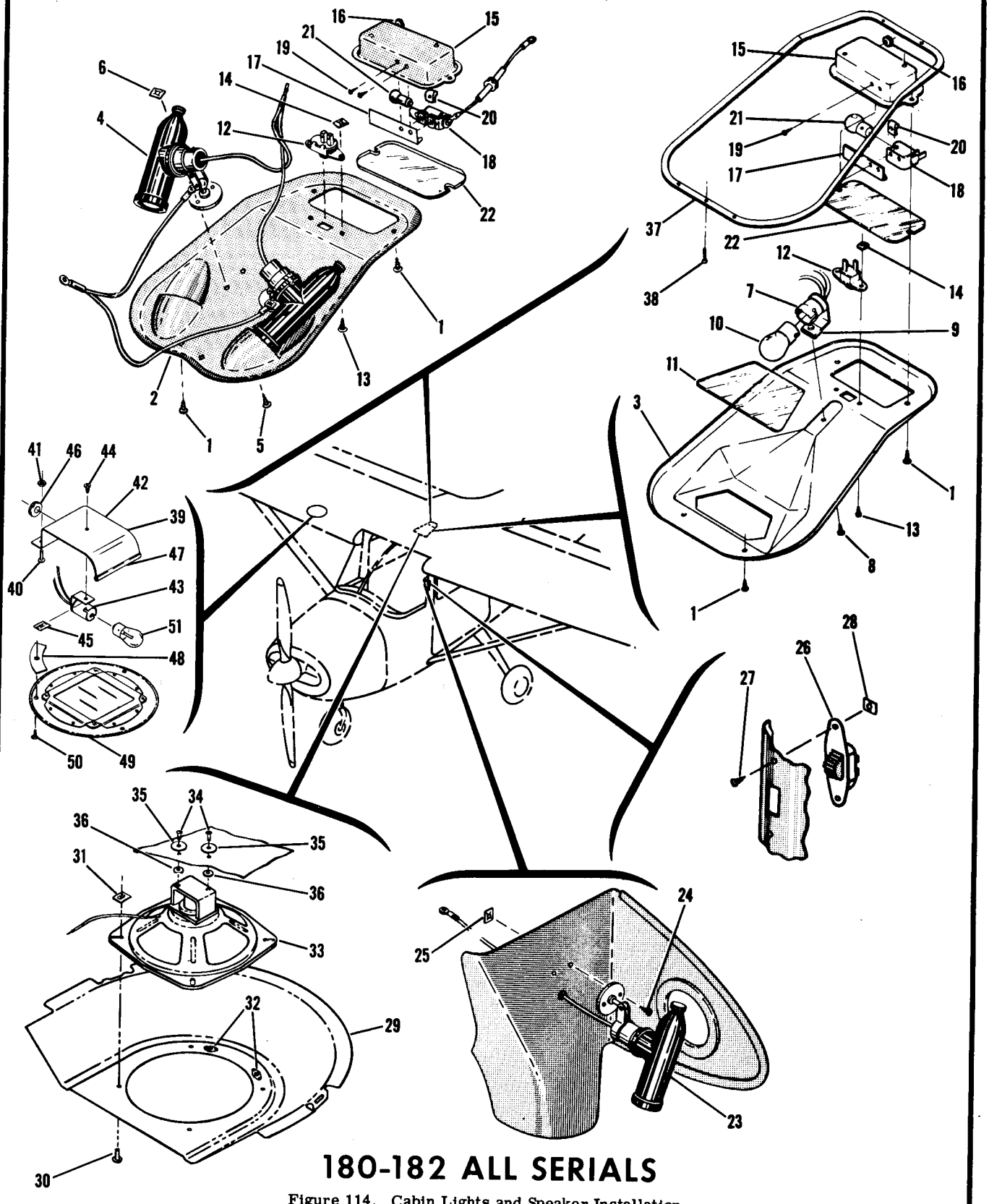

180-182 ALL SERIALS

Figure 114. Cabin Lights and Speaker Installation

FIGURE AND INDEX NO.	PART NUMBER	DESCRIPTION 1 2 3 4 5 6 7	UNITS PER ASSY	USABLE ON CODE
114-		CABIN LIGHTS, SPEAKER & COURTESY LIGHT INSTALLATION	NP	
	0710101-3	SHIELD ASSEMBLY-INSTRUMENT LIGHT	1	A
	0710103-3	LIGHT ASSEMBLY-INSTRUMENT PANEL FLOOD	1	K
	0710103-10	LIGHT ASSEMBLY-INSTRUMENT PANEL FLOOD	1	L
		ATTACHING PARTS		
- 1	S-1021Z-6-6	SCREW CESSNA STANDARD	2	
		---*---		
- 2	0710101-1	PLATE-COVER	1	A
- 3	0710103-5	PLATE-COVER	1	K
	0710103-11	PLATE-COVER	1	L
- 4	0713017-21	SPOTLIGHT ASSEMBLY	2	C
	0713017	LIGHT ASSEMBLY-INSTRUMENT	2	D
		ATTACHING PARTS		
- 5	S-1021Z-6-8	SCREW CESSNA STANDARD	1	
- 6	NAS446-2-3	NUT TIN A1181-6Z-3	1	
		---*---		
	MS15570-5	BULB	1	
- 7	0513208-1	SOCKET	1	B
		ATTACHING PARTS		
- 8	S-1021Z-6-6	SCREW CESSNA STANDARD	1	
- 9	NAS446-2-3	NUT TIN A1181-6Z-3	1	
		---*---		
- 10	MS15584-2	BULB	1	B
- 11	0710103-2	LENS	1	B
- 12	0713029	SWITCH	1	
		ATTACHING PARTS		
- 13	S-1021Z-6-6	SCREW CESSNA STANDARD	2	
- 14	NAS446-2-3	NUT TIN A1181-6Z-3	2	
		---*---		
	0413142-4	LIGHT ASSEMBLY-DOME	1	G
	0413142-5	LIGHT ASSEMBLY-DOME	1	H
- 15	0413140	REFLECTOR	1	
- 16	MS35489-4	GROMMET	1	
- 17	0413140-2	RETAINER	1	
- 18	0413138	SOCKET	1	
		ATTACHING PARTS		
- 19	S-1021Z-4-4	SCREW CESSNA STANDARD	2	
- 20	NAS395-1-3	NUT TIN A6187-4Z-3	2	
		---*---		
- 21	1816	BULB	1	
- 22	0413141-1	LENS	1	
- 23	0713017-22	SPOTLIGHT ASSEMBLY-MAP	1	
		ATTACHING PARTS		
- 24	S-1021Z-6-8	SCREW CESSNA STANDARD	2	
- 25	NAS446-2-3	NUT TIN A1181-6Z-3	2	
		---*---		
	MS15570-5	BULB	1	
- 26	0713029	SWITCH-MAP LIGHT	1	
		ATTACHING PARTS		
- 27	S-1021Z-4-6	SCREW CESSNA STANDARD	2	
- 28	NAS446-1-3	NUT TIN A1776-4Z-3	2	
		---*---		
		HEADSET-SPEAKER-MICROPHONE INSTALLATION	NP	E
- 29	0413238	BAFFLE ASSEMBLY-RADIO SPEAKER		
		ATTACHING PARTS		
- 30	S-1021Z-8-8	SCREW CESSNA STANDARD	4	
- 31	NAS446-4-3	NUT TIN A1778-8Z-3	4	
		---*---		
- 32	NAS444-1	NUTPLATE TIN A6191-6Z-3	2	
- 33	0411062-4	SPEAKER-RADIO	1	
		ATTACHING PARTS		
- 34	AN515-8R8	SCREW	2	
- 35	0311001-27	WASHER-CORK CESSNA STANDARD	2	
- 36	AN970-3	WASHER	2	
		---*---		

180-182 ALL SERIALS

CONTINUED ON PAGE 310

FIGURE AND INDEX NO.	PART NUMBER	DESCRIPTION 1 2 3 4 5 6 7	UNITS PER ASSY	USABLE ON CODE
114-		HEADSET-SPEAKER-MICROPHONE INSTALLATION ----------	NP	F
	0411062-4	SPEAKER-RADIO ----------	1	
		ATTACHING PARTS		
	AN515-8R5	SCREW ----------	2	
	0311001-27	WASHER ----------	2	
	AN970-3	WASHER ----------	2	
		---*---		
- 37	1200130-1	PLATE-HEADLINER RETAINER ----------	1	J
		ATTACHING PARTS		
- 38	S-1021Z-6-6	SCREW CESSNA STANDARD ----------	1	
		---*---		
		COURTESY LIGHT INSTALLATION ----------	NP	
- 39	0700616-1	SHIELD ASSEMBLY ----------	1	
		ATTACHING PARTS		
- 40	AN515-6R8	SCREW ----------	2	
- 41	MS20365-632C	NUT ----------	2	
		---*---		
- 42	0700616-2	SHIELD ----------	1	
- 43	0513208-1	SOCKET ----------	1	
		ATTACHING PARTS		
- 44	S-1021Z-6-8	SCREW ----------	1	
- 45	NAS446-2-3	NUT ----------	1	
		---*---		
- 46	MS35489-134	GROMMET ----------	1	
- 47	S-1055-1-2.25	CHANNEL ----------	1	
- 48	0700617-1	SPACER ----------	1	
- 49	0700618-1	PLATE ASSEMBLY ----------	1	
		ATTACHING PARTS		
- 50	S-1021Z-8-8	SCREW ----------	3	
		---*---		
- 51	MS15584-2	LAMP ----------	1	
		A---180 SERIAL 30000 THRU 50355		
		182 SERIAL 33000 THRU 51556		
		B---180 SERIAL 50356 & ON		
		182 SERIAL 51557 & ON		
		C---180 SERIAL 30000 THRU 50355		
		D---182 SERIAL 33000 THRU 51556		
		E---180 SERIAL 30000 THRU 32150		
		F---180 SERIAL 32151 & ON		
		182 SERIAL 33000 & ON		
		G---180 SERIAL 30000 THRU 50401		
		182 SERIAL 33000 THRU 51660		
		H---180 SERIAL 50402 & ON		
		182 SERIAL 51661 & ON		
		J---180 SERIAL 18050912 & ON		
		182 SERIAL 18253008 & ON		
		K---180 SERIAL 50356 THRU 18051020		
		182 SERIAL 51557 THRU 18253342		
		L---180 SERIAL 18051021 & ON		
		182 SERIAL 18253343 & ON		
		NOTE. FOR ACCESSORY KIT LISTINGS REFER TO		
		PAGES 372 THRU 374B		
		S-NOS APPEARING ON THIS PAGE ARE CESSNA STANDARD		

DELETED NOTICE

ELECTRICAL WIRING DATA ORIGINALLY SHOWN ON FIGURES 115 THRU 119
HAVE BEEN DELETED FROM THIS CATALOG.
CONSULT MAINTENANCE MANUAL FOR WIRING DIAGRAMS & WIRE TABLES.

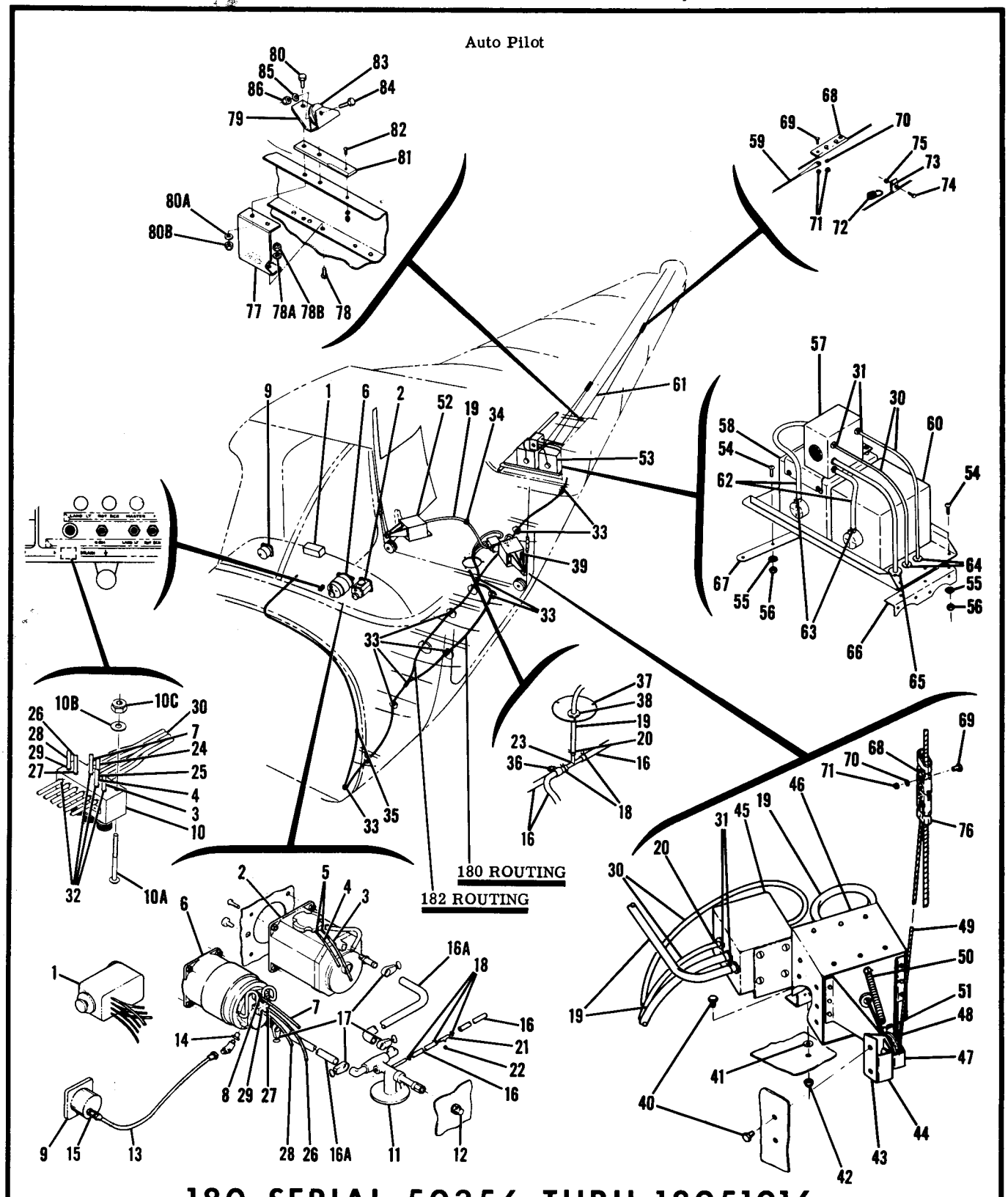

180 SERIAL 50356 THRU 18051016
182 SERIAL 51557 THRU 18253512

Figure 120. Tactair T-3 Auto Pilot Installation

FIGURE AND INDEX NO.	PART NUMBER	DESCRIPTION 1 2 3 4 5 6 7	UNITS PER ASSY	USABLE ON CODE
120-		AUTO PILOT INSTALLATION-TACTAIR T-3	NP	A
- 1	0770011-19	CONTROL ASSEMBLY-COMMAND	1	
		ATTACHING PARTS		
	0770036-1	SPACER	1	
	AN960-4L	WASHER	3	
	AN515-4R5	SCREW	3	
		---*---		
- 2	0770012-7	DIRECTIONAL GYRO	1	
		ATTACHING PARTS		
	AN520C10R16	SCREW	4	
		---*---		
- 3	B-296-59	HOSE-----.09 ID BROWN 24 IN. LONG TCTA	1	
- 4	B-296-58	HOSE-----.09 ID PINK---- 24 IN. LONG TCTA	1	
- 5	0770012-13	CLAMP	2	
- 6	0770011-24	GYRO-HORIZON	1	
		ATTACHING PARTS		
	AN520C10R16	SCREW	4	
		---*---		
- 7	B-296-61	HOSE-----.09 ID GREEN 24 IN. LONG TCTA	1	
- 8	0770012-13	CLAMP	1	
- 9	0311057-1	GAGE-SUCTION WHEN EXHAUSTED USE S-1300N1	1	
	S-1300N1	GAGE-SUCTION	1	
		ATTACHING PARTS		
	AN507B632R12	SCREW	4	
		---*---		
- 10	0770011-37	BLOCK ASSEMBLY-TEE	1	
		ATTACHING PARTS		
-10A	AN515-6R22	SCREW	1	
-10B	AN960-6L	WASHER	1	
-10C	MS20365-632C	NUT	1	
		---*---		
- 11	0770011-18	VALVE ASSEMBLY	1	
		ATTACHING PARTS		
- 12	AN832-6D	UNION	1	
	AN960D916	WASHER	1	
	AN924-6D	NUT	1	
		---*---		
- 13	S-1168-2-23	HOSE ASSEMBLY-GYRO HORIZON TO SUCTION GAGE	1	
		ATTACHING PARTS		
- 14	AN912-1D	BUSHING-REDUCER	1	
	AN823-2D	ELBOW	1	
- 15	AN816-2D	NIPPLE	1	
		---*---		
- 16	A-979	HOSE .38 ID BULK ITEM 15 FEET LONG TCTA----	AR	
-16A	MIL-H-5593-6	HOSE 8 IN. LONG	2	
- 17	AN737RM22	CLAMP	4	
- 18	CS8	CLAMP CRB	7	
- 19	A-978	HOSE .25 ID BULK ITEM 10 FEET LONG TCTA----	AR	
- 20	CS6	CLAMP CRB	7	
- 21	0770011-30	TEST FITTING	1	
- 22	C-1132-16	CAP-TEST FITTING-----TCTA	1	
- 23	0770011-29	TEE-FITTING	1	
- 24	B-296-60	HOSE .09 ID RED 24 IN. LONG TCTA	1	
		ATTACHING PARTS		
- 25	0770012-13	CLAMP	2	
		---*---		
- 26	B-296-57	HOSE .09 ID YELLOW---- 24 IN. LONG TCTA	1	
		ATTACHING PARTS		
- 27	0770012-13	CLAMP	2	
		---*---		
- 28	B-296-56	HOSE .09 ID BLUE 24 IN. LONG-----TCTA	1	
		ATTACHING PARTS		
- 29	0770012-13	CLAMP	2	
		---*---		
- 30	0770011-38	HOSE .09 ID 4 CAVITY HOSE BLUE, YELLOW, GREEN, & RED BULK ITEM 17 FEET LONG TCTA	AR	
		ATTACHING PARTS		
- 31	0770012-13	CLAMP	8	
		---*---		

S-NOS APPEARING ON THIS PAGE ARE CESSNA STANDARD

CONTINUED ON PAGES 314 & 315

180 SERIAL 50356 THRU 18051016
182 SERIAL 51557 THRU 18253512

FIGURE AND INDEX NO.	PART NUMBER	DESCRIPTION 1 2 3 4 5 6 7	UNITS PER ASSY	USABLE ON CODE
120- 32	0770012-13	CLAMP	10	
- 33	49166-21	HARNESS BAND UC	7	
		ATTACHING PARTS		
	S-1021Z-6-8	SCREW CESSNA STANDARD	1	
		---*---		
- 34	49160	HARNESS BAND UC	1	
- 35	0770011-17	STRAP-HOSE	1	
- 36	MS21919DG18	CLAMP	1	
		ATTACHING PARTS		
	S-1021Z-8-10	SCREW CESSNA STANDARD	1	
	NAS446-4-3	NUT	1	
		---*---		
- 37	0770011-16	COVER PLATE	1	
- 38	MS35489-17	GROMMET	1	
- 39	0770012-19	SERVO & AMPLIFIER ASSEMBLY-AILERON LH	1	
		ATTACHING PARTS		
- 40	AN3-4A	BOLT	4	
- 41	AN960-10L	WASHER	AR	
- 42	MS20365-1032C	NUT	4	
- 43	B-766-1	SUPPORT TCTA	1	
- 44	B-903-1	SUPPORT TCTA	1	
		---*---		
- 45	C-1132	AMPLIFIER-----TCTA	1	
	A-998	FILTER TCTA	1	
	A-400	DISK-PAPER TCTA		
	A-289	SCREEN-MONEL-----TCTA	1	
	A-1075	GROMMET-----TCTA	1	
- 46	C-622	SERVO-LH TCTA	1	
- 47	A-928	GUIDE ASSEMBLY TCTA	1	
- 48	MS2019-2	PULLEY	1	
		ATTACHING PARTS		
	AN4-11A	BOLT	1	
		---*---		
- 49	B-674-5	CABLE ASSEMBLY TCTA	1	
- 50	A-628	SPRING-TAKE UP TCTA	1	
		ATTACHING PARTS		
- 51	A-427	CLAMP-SPRING-----TCTA	1	
	AN500A4-4	SCREW	1	
	AN960-4L	WASHER	1	
	MS20365-440C	NUT-LOCK	1	
		---*---		
- 52	0770012-20	SERVO ASSEMBLY-AILERON RH	1	
		ATTACHING PARTS		
	AN3-4A	BOLT	4	
	AN960-10L	WASHER	AR	
	MS20365-1032C	NUT	4	
	B-766-2	SUPPORT TCTA	1	
	B-903-2	SUPPORT TCTA	1	
		---*---		
	C-621	SERVO-RH TCTA	1	
	A-928	GUIDE ASSEMBLY TCTA	1	
	MS2019-2	PULLEY	1	
		ATTACHING PARTS		
	AN4-11A	BOLT	1	
		---*---		
	B-674-5	CABLE ASSEMBLY TCTA	1	
	A-628	SPRING-TAKE UP TCTA	1	
		ATTACHING PARTS		
	A-427	CLAMP-SPRING-----TCTA	1	
	AN500A4-4	SCREW	1	
	AN960-4L	WASHER	1	
	MS20365-440C	NUT-LOCK	1	
		---*---		

CONTINUED ON PAGE 315

FIGURE AND INDEX NO.	PART NUMBER	DESCRIPTION 1 2 3 4 5 6 7	UNITS PER ASSY	USABLE ON CODE
120- 53	0770011-22	SERVO & AMPLIFIER ASSEMBLY-ELEVATOR	1	
		ATTACHING PARTS		
- 54	AN3-4A	BOLT	5	
- 55	AN960-10L	WASHER	5	
- 56	MS20365-1032C	NUT	5	
		---*---		
- 57	C-1132	AMPLIFIER-----TCTA	1	
- 58	C-630	SERVO-RH TCTA	1	
- 59	B-674-4	CABLE ASSEMBLY TCTA	1	
- 60	C-631	SERVO-LH TCTA	1	
- 61	B-674-1	CABLE ASSEMBLY TCTA	1	
- 62	A-978	HOSE-----.25 ID BULK ITEM 10 IN. LONG TCTA	2	
		ATTACHING PARTS		
- 63	CS6	CLAMP CRB	4	
		---*---		
- 64	MS35489-6	GROMMET	2	
- 65	MS35489-11	GROMMET	1	
- 66	0770011-4	ANGLE-SUPPORT	1	
- 67	0770049-1	ANGLE-SUPPORT	1	
		ATTACHING PARTS		
	AN515-8R10	SCREW	2	
	S-355	SPACER-----CESSNA STANDARD	2	
	MS20365-832C	NUT	2	
		---*---		
- 68	0770012-15	CLAMP-CABLE	4	
		ATTACHING PARTS		
- 69	AN3-3A	BOLT	4	
- 70	AN960-10L	WASHER	3	
- 71	MS20364-1032C	NUT	4	
		---*---		
- 72	0770011-31	SPRING-TAKE UP	2	
		ATTACHING PARTS		
- 73	0770011-33	CLAMP	1	
- 74	AN500A4-4	SCREW	1	
- 75	MS20365-440C	NUT	1	
		---*---		
- 76	0770012-18	COVER-CABLE CLAMP	2	
- 77	0770011-34	CHANNEL-REINFORCEMENT	1	
		ATTACHING PARTS		
- 78	AN520C8R8	SCREW	2	
-78A	AN960-8	WASHER	2	
-78B	MS20365-832C	NUT	2	
		---*---		
- 79	0770011-35	BRACKET ASSEMBLY-PULLEY	1	
		ATTACHING PARTS		
- 80	AN3-6A	BOLT	2	
-80A	AN960-10L	WASHER	2	
-80B	MS20365-1032C	NUT	2	
		---*---		
- 81	0770011-36	RUB STRIP	1	
		ATTACHING PARTS		
- 82	AN515-4R6	SCREW	1	
	AN960-4L	WASHER	1	
	MS20365-440C	NUT	1	
		---*---		
- 83	AN210-1B	PULLEY	1	
		ATTACHING PARTS		
- 84	AN3-6A	BOLT	1	
- 85	AN960-10L	WASHER	1	
- 86	MS20365-1032C	NUT	1	
		---*---		
		VACUUM SYSTEM INSTALLATION-TACTAIR SEE FIGURE 120B ----	NP	
		A---180 SERIAL 50356 THRU 18051016 182 SERIAL 51557 THRU 18253512 NOTE. FOR ACCESSORY KIT LISTINGS REFER TO PAGES 372 THRU 374B		

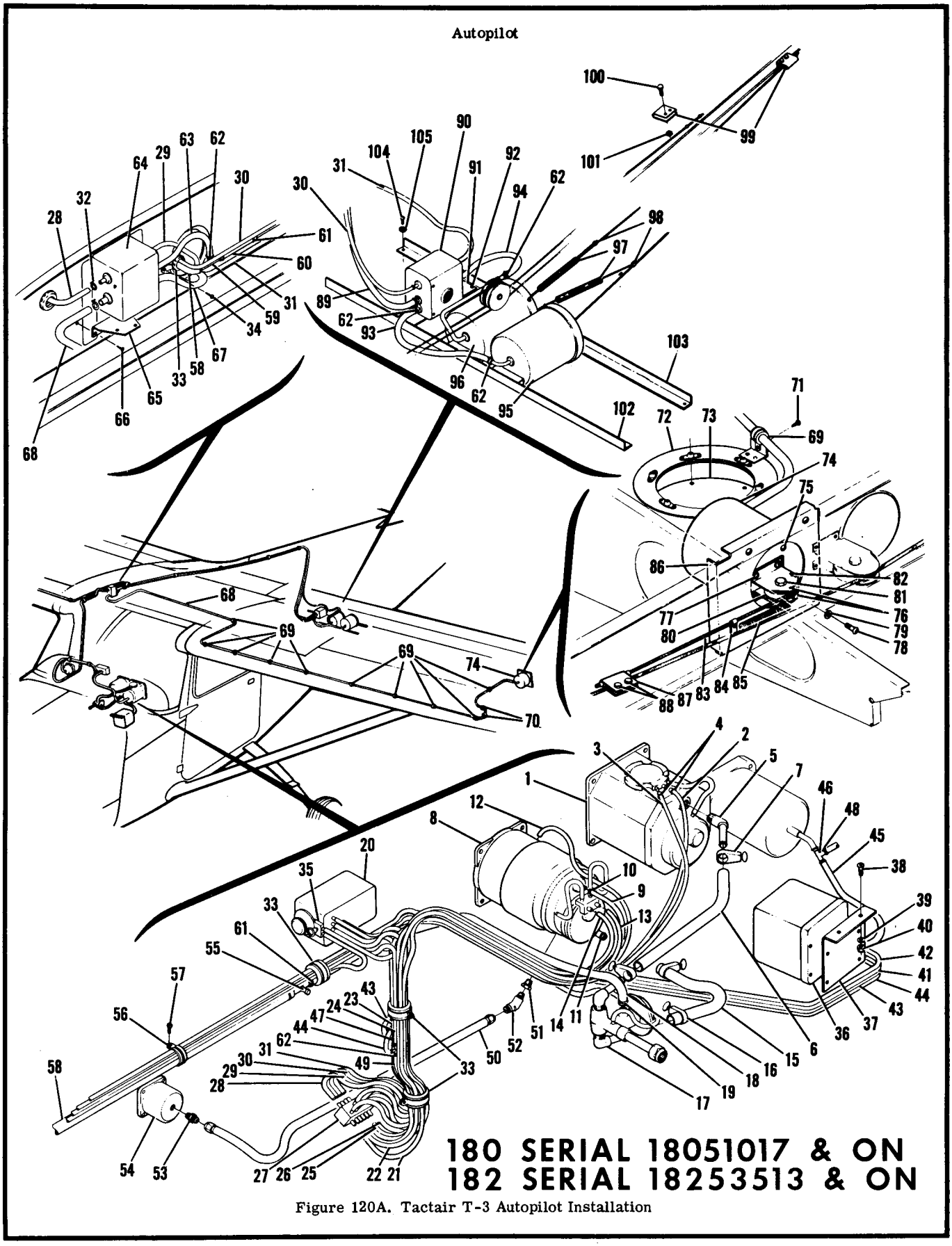

Figure 120A. Tactair T-3 Autopilot Installation

FIGURE AND INDEX NO.	PART NUMBER	DESCRIPTION 1 2 3 4 5 6 7	UNITS PER ASSY	USABLE ON CODE
120A-		AUTOPILOT INSTALLATION-TACTAIR T-3	NP	A
- 1	0770012-7	GYRO-DIRECTIONAL	1	
		ATTACHING PARTS		
	AN520C10R16	SCREW	4	
		---*---		
- 2	B-296-59	HOSE-GYRO TO TEE BLOCK BROWN TCTA	1	
- 3	B-296-58	HOSE-GYRO TO TEE BLOCK PINK TCTA	1	
- 4	A-482	CLAMP TCTA	2	
- 5	AN844-6D	ELBOW	1	
- 6	1200077-17	HOSE-DIRECTIONAL GYRO TO SHUT-OFF VALVE	1	
		ATTACHING PARTS		
- 7	AN737RM22	CLAMP	2	
		---*---		
- 8	0770011-24	GYRO-HORIZON	1	
		ATTACHING PARTS		
	AN520C10R16	SCREW	4	
		---*---		
- 9	B-296-61	HOSE-GYRO TO TEE BLOCK GREEN TCTA	1	
- 10	A-482	CLAMP TCTA	1	
- 11	AN842-6D	ELBOW	1	
- 12	1200077-22	HOSE-HORIZONTAL GYRO TO TEE BLOCK RED	1	
- 13	1200077-18	HOSE-HORIZONTAL GYRO TO TEE BLOCK YELLOW	1	
- 14	1200077-23	HOSE-HORIZONTAL GYRO TO TEE BLOCK BLUE	1	
- 15	1200077-16	HOSE-HORIZONTAL GYRO TO SHUT-OFF VALVE	1	
		ATTACHING PARTS		
- 16	AN737RM22	CLAMP	2	
		---*---		
- 17	1200077-2	VALVE-SHUT OFF	1	
- 18	A-979	HOSE-SHUT-OFF VALVE TO TEST TEE 25 IN. LG.	AR	
		BULK ITEM TCTA REF 1200077-20		
- 19	CS-3	CLAMP TCTA	10	
- 20	0770011-19	COMMAND CONTROL ASSEMBLY	1	
- 21	B-296-50	HOSE-COMMAND CONTROL TO TEE BLOCK-----BLUE TCTA	1	
- 22	B-296-51	HOSE-COMMAND CONTROL TO TEE BLOCK-----YELLOW TCTA	1	
- 23	A-654-5	HOSE-COMMAND CONTROL TO TEE BLOCK-----RED TCTA	1	
- 24	A-654-6	HOSE-COMMAND CONTROL TO TEE BLOCK-----GREEN-----TCTA	1	
- 25	B-296-52	HOSE-COMMAND CONTROL TO TEE BLOCK-----PINK TCTA	1	
- 26	B-296-53	HOSE-COMMAND CONTROL TO TEE BLOCK-----BROWN-----TCTA	1	
	0770012-13	CLAMP	6	
- 27	0770011-37	TEE BLOCK ASSEMBLY	1	
		ATTACHING PARTS		
	AN515-6R22	SCREW	1	
	AN960-6L	WASHER	1	
	MS20365-632C	NUT	1	
		---*---		
- 28	1200077-27	HOSE-TEE BLOCK TO AILERON AMPLIFIER-----BLUE	1	
- 29	1200077-28	HOSE-TEE BLOCK TO AILERON AMPLIFIER-----YELLOW	1	
- 30	1200077-31	HOSE-TEE BLOCK TO ELEVATOR AMPLIFIER GREEN	1	
- 31	1200077-34	HOSE-TEE BLOCK TO ELEVATOR AMPLIFIER RED	1	
- 32	0770012-13	CLAMP	3	
- 33	A9167-21	HARNESS BAND UC	3	
		ATTACHING PARTS		
- 34	S-1021Z-6-8	SCREW CESSNA STANDARD	1	
		---*---		
		ALTITUDE HOLD INSTALLATION	NP	
- 35	1200079-2	SHUT-OFF VALVE-ALTITUDE HOLD	1	
- 36	1200079-3	ALTITUDE HOLD ASSEMBLY	1	
		ATTACHING PARTS		
- 37	1200079-10	BRACKET-MOUNTING	1	
- 38	AN507-832R8	SCREW	2	
- 39	AN960-8	WASHER	2	
- 40	MS20365-832C	NUT	2	
		---*---		
- 41	B-804-2	HOSE-SHUT-OFF VALVE TO ALTITUDE HOLD-----CLEAR-----TCTA	1	
- 42	B-804-3	HOSE-SHUT-OFF VALVE TO ALTITUDE HOLD-----ORANGE TCTA	1	
- 43	A-654-5	HOSE-ALTITUDE HOLD TO TEE RED TCTA	1	
- 44	A-654-6	HOSE-ALTITUDE HOLD TO TEE GREEN TCTA	1	
- 45	B-296-20		1	

CONTINUED ON PAGES 315C, 315D

180 SERIAL 18051017 & ON

182 SERIAL 18253513 & ON

FIGURE AND INDEX NO.	PART NUMBER	DESCRIPTION 1 2 3 4 5 6 7	UNITS PER ASSY	USABLE ON CODE
120A- 46	1200079-9	TEE	1	
- 47	1200079-8	TEE	1	
- 48	0770012-13	CLAMP	9	
- 49	1200079-4	HOSE-TEE TO TEE BLOCK RED	1	
	1200079-6	HOSE-TEE TO TEE BLOCK GREEN	1	
- 50	S-1168-2-22	HOSE ASSEMBLY-HORIZ. GYRO TO SUCTION GAGE	1	
		ATTACHING PARTS		
- 51	AN912-1D	BUSHING-REDUCER	1	
- 52	MS20822-2D	ELBOW	1	
- 53	AN816-2D	NIPPLE	1	
		---*---		
- 54	0311057-2	GAGE-SUCTION WHEN EXHAUSTED USE S-1300N1	1	
	S-1300N1	GAGE-SUCTION	1	
		ATTACHING PARTS		
	AN507BG632R12	SCREW	4	
		---*---		
- 55	0770011-30	TEE-TEST	1	
- 56	MS21919WDG12	CLAMP	1	
		ATTACHING PARTS		
- 57	NAS221-5	SCREW	1	
	MS20364-1032C	NUT	1	
		---*---		
- 58	A-979	HOSE-TEST TEE TO ROOT RIB TEE 66 IN. LG.	AR	
		BULK ITEM TCTA REF 1200077-14		
- 59	0770011-29	TEE FITTING	1	
- 60	A-979	HOSE-SPLICE-----4 IN. LG. ----BULK ITEM TCTA	AR	
		REF 1200077-30		
- 61	CS-8	CLAMP TCTA	6	
- 62	CS-6	CLAMP TCTA	10	
- 63	A-978	HOSE-TEE TO AILERON AMPLIFIER 11 IN. LG. BULK ITEM	AR	
		TCTA REF 1200077-29		
- 64	0770012-45	AMPLIFIER-AILERON	1	
		ATTACHING PARTS		
- 65	1200077-10	BRACKET-AILERON AMPLIFIER	1	
- 66	AN515-8R8	SCREW	2	
	AN960-8	WASHER	2	
	MS20365-832C	NUT	2	
		---*---		
- 67	A-978	HOSE-AILERON AMPLIFIER TO RIGHT WING SERVO 159 IN. LG.	AR	
		BULK ITEM TCTA REF 1200077-25		
- 68	A-978	HOSE-AILERON AMPLIFIER TO LEFT WING SERVO 196.5 IN. LG.	AR	
		BULK ITEM TCTA REF 1200077-26		
		ATTACHING PARTS		
- 69	49165-21	HARNESS BAND UC	9	
- 70	49165-22	HARNESS BAND UC	2	
- 71	S-1021Z-6-8	SCREW	11	
		---*---		
- 72	S-1072-1	DOUBLER ASSEMBLY	2	
- 73	S-225-6	PLATE-ACCESS	2	
		ATTACHING PARTS		
	S-1021Z-8-8	SCREW	6	
		---*---		
- 74	1200077-5	SERVO ASSEMBLY-AILERON	2	
		ATTACHING PARTS		
	1200077-9	MOUNTING PLATE	1	
- 75	AN515-8R8	SCREW	8	
	AN960-8	WASHER	8	
	MS20365-832C	NUT	4	
		---*---		
- 76	A-1272	BRACKET-PULLEY-----TCTA	2	
		ATTACHING PARTS		
- 77	AN515-8-14	SCREW	2	
- 78	AN515-8-7	SCREW	2	
- 79	AN960-8	WASHER	4	
		---*---		
- 80	G-37	PULLEY ATPU	1	
		ATTACHING PARTS		
- 81	AN3-6A	BOLT	1	
	AN960-10L	WASHER	1	
		S-NOS APPEARING ON THIS PAGE ARE CESSNA STANDARD		
		CONTINUED ON PAGE 315D		

FIGURE AND INDEX NO.	PART NUMBER	DESCRIPTION 1 2 3 4 5 6 7	UNITS PER ASSY	USABLE ON CODE
120A-	MS20364-1032C	NUT	1	
	A-1396	BEARING TCTA	1	
		---*---		
- 82	AN381-2-12	PIN-COTTER	2	
- 83	B-1341-8	CABLE ASSEMBLY-----TCTA	1	
- 84	A-427	CLAMP-CABLE TCTA	1	
		ATTACHING PARTS		
	AN500A4-4	SCREW	1	
	AN960-4	WASHER	1	
	MS20365-440C	NUT	1	
		---*---		
- 85	1200077-7	SPRING-TAKE-UP	2	
- 86	1200077-3	DOUBLER-REAR SPAR LH	1	
	1200077-4	DOUBLER-REAR SPAR RH	1	
- 87	1200077-8	CLAMP-CABLE	2	
		ATTACHING PARTS		
- 88	AN3-3A	BOLT	2	
	AN960-10	WASHER	2	
	MS20364-1032C	NUT	2	
		---*---		
- 89	A-978	HOSE-SPLICE TO ELEVATOR AMPLIFIER 100 IN. LG.	AR	
		BULK ITEM TCTA REF 1200077-32		
- 90	0770012-45	AMPLIFIER-ELEVATOR	1	
		ATTACHING PARTS		
- 91	1200077-37	BRACKET-ELEVATOR AMPLIFIER	1	
- 92	AN3-3A	BOLT	4	
	AN960-10	WASHER	4	
	MS20364-1032C	NUT	4	
		---*---		
- 93	A-978	HOSE-ELEVATOR AMPLIFIER TO UP SERVO-----12 IN. LG.	AR	
		BULK ITEM TCTA REF 1200077-33		
- 94	A-978	HOSE-ELEVATOR AMPLIFIER TO DOWN SERVO 12 IN. LG.	AR	
		BULK ITEM TCTA REF 1200077-35		
- 95	0770028-5	SERVO ASSEMBLY-ELEVATOR UP	1	
- 96	0770028-6	SERVO ASSEMBLY-ELEVATOR DOWN	1	
		ATTACHING PARTS		
	AN3-3A	BOLT	4	
	AN960-10	WASHER	4	
	MS20364-1032C	NUT	4	
		---*---		
- 97	1200077-13	SPRING-TAKE-UP	2	
		ATTACHING PARTS		
- 98	0770011-33	CLAMP	1	
	AN500A4-4	SCREW	1	
	AN960-4	WASHER	1	
	MS20365-440C	NUT	1	
		---*---		
- 99	0770012-15	CLAMP-CABLE	2	
		ATTACHING PARTS		
-100	AN3-4A	BOLT	2	
-101	MS20365-1032C	NUT	2	
		---*---		
-102	0770028-3	ANGLE-FORWARD	1	
-103	0770028-4	ANGLE-AFT	1	
		ATTACHING PARTS		
-104	AN3-3A	BOLT	2	
-105	AN960-10	WASHER	2	
	MS20364-1032C	NUT	2	
		---*---		

A---180 SERIAL 18051017 & ON
182 SERIAL 18253513 & ON

Auto Pilot (Cont)

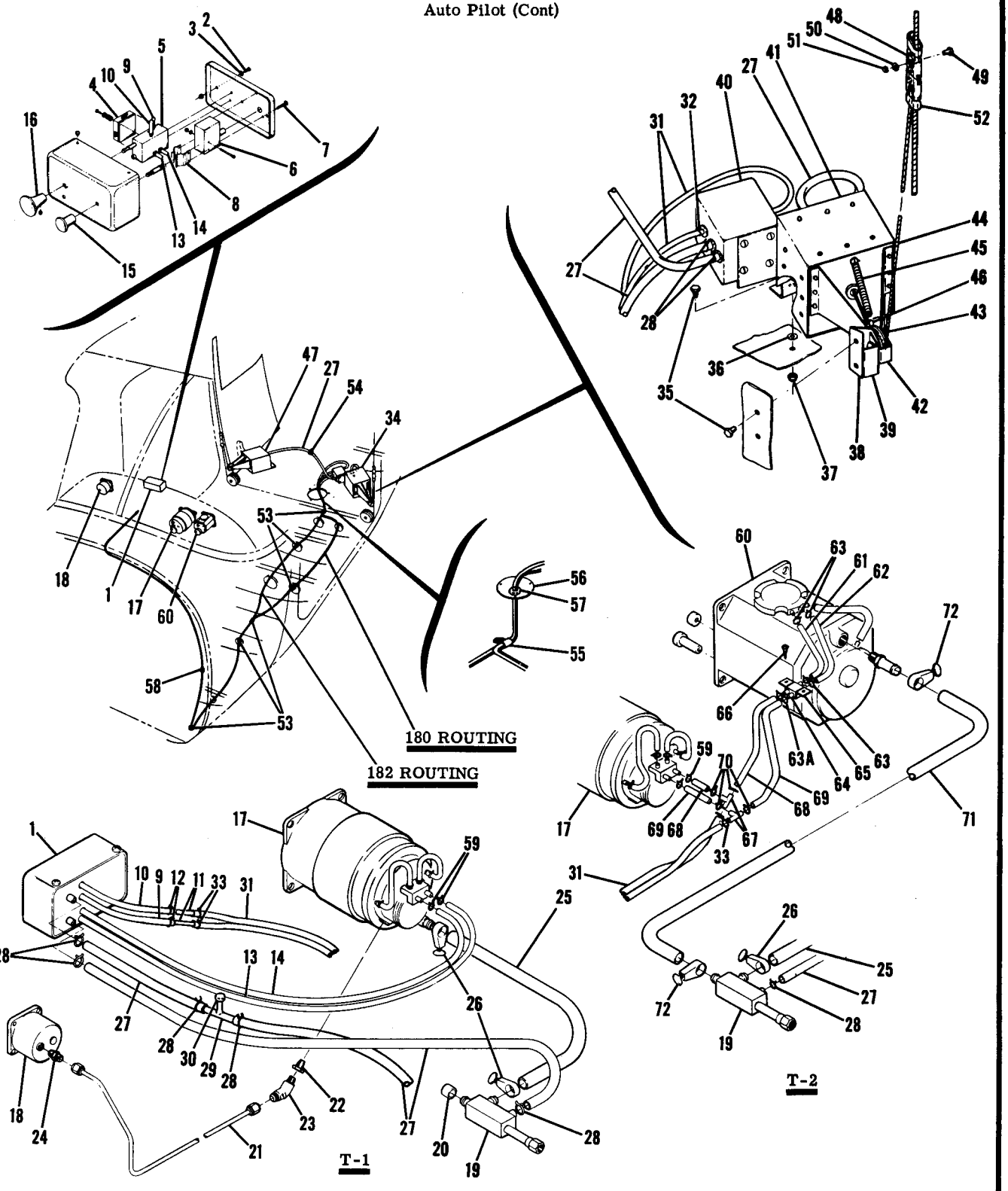

180 SERIAL 50356 THRU 18050996
182 SERIAL 51557 THRU 18253290

Figure 120B. Tactair T-1 & T-2 Auto Pilot Installation

FIGURE AND INDEX NO.	PART NUMBER	DESCRIPTION 1 2 3 4 5 6 7	UNITS PER ASSY	USABLE ON CODE
120B-		AUTO PILOT INSTALLATION-TACTAIR T-1	NP	A
- 1	0770012-5	UNIT ASSEMBLY-CONTROL	1	
		ATTACHING PARTS		
- 2	AN500C4-7	SCREW	3	
- 3	AN960-4L	WASHER	3	
		---*---		
- 4	A-1106	FILTER TCTA	1	
	A-1108	DISK-PAPER TCTA	1	
	A-1105	GASKET TCTA	1	
- 5	C-915	TRIM ASSEMBLY-ROLL TCTA	1	
		ATTACHING PARTS		
	AN507-440-5	SCREW	2	
		---*---		
- 6	C-914	BODY ASSEMBLY TCTA	1	
		ATTACHING PARTS		
- 7	AN507-440-5	SCREW	2	
		---*---		
- 8	A-911	SPRING .TCTA	2	
- 9	B-296-7	HOSE-----.09 ID BLUE---- 6.75 IN. LONG TCTA	1	
- 10	B-296-8	HOSE-----.09 ID YELLOW 6.1875 IN. LONG TCTA	1	
- 11	A-1213	CONNECTOR-HOSE-----TCTA	2	
- 12	A-482	CLAMP TCTA	2	
- 13	B-296-17	HOSE-----.09 ID YELLOW 18 IN. LONG TCTA	1	
- 14	B-296-18	HOSE-----.09 ID BLUE---- 18 IN. LONG TCTA	1	
- 15	0713303-9	KNOB	1	
- 16	0713303-11	KNOB ASSEMBLY	1	
- 17	0770012-6	GYRO-HORIZON	1	
		ATTACHING PARTS		
	AN520C10R16	SCREW	4	
		---*---		
- 18	0311057-1	GAGE-SUCTION WHEN EXHAUSTED USE S-1300N1	1	
	S-1300N1	GAGE-SUCTION	1	
		ATTACHING PARTS		
	AN507B632R12	SCREW	4	
		---*---		
- 19	0770012-8	TEE ASSEMBLY-RESTRICTOR	1	
	M74CR524-12E	SET SCREW	1	
- 20	0770012-24	CAP	1	
- 21	S-1168-2-23	HOSE ASSEMBLY-GYRO-HORIZON TO SUCTION GAGE	1	
		ATTACHING PARTS		
- 22	AN912-1D	BUSHING-REDUCER	1	
- 23	MS20822-2D	ELBOW	1	
- 24	AN816-2D	NIPPLE	1	
		---*---		
- 25	A-979	HOSE .38 ID BULK ITEM 3 FEET LONG TCTA	AR	
- 26	AN737RM22	CLAMP	2	
- 27	A-978	HOSE .25 ID BULK ITEM 17 FEET LONG TCTA	AR	
- 28	CS6	CLAMP CRB	10	
- 29	0770012-43	TEE-TEST	1	
- 30	0770012-42	CAP	1	
- 31	0770012-33	HOSE .09 ID 2 CAVITY HOSE BLUE & YELLOW	AR	
		BULK ITEM 16 FEET LONG TCTA		
		ATTACHING PARTS		
- 32	0770012-13	CLAMP	2	
- 33	A-482	CLAMP TCTA	2	
		---*---		

180 SERIAL 50356 THRU 18050996

182 SERIAL 51557 THRU 18253290

S-NOS APPEARING ON THIS PAGE ARE CESSNA STANDARD

CONTINUED ON PAGES 318 & 319

FIGURE AND INDEX NO.	PART NUMBER	DESCRIPTION 1 2 3 4 5 6 7	UNITS PER ASSY	USABLE ON CODE
120B- 34	0770012-19	SERVO & AMPLIFIER ASSEMBLY-AILERON LH	1	
		ATTACHING PARTS		
- 35	AN3-4A	BOLT	4	
- 36	AN960-10L	WASHER	AR	
- 37	MS20365-1032C	NUT	4	
- 38	B-766-1	SUPPORT TCTA	1	
- 39	B-903-1	SUPPORT TCTA	1	
		---*---		
- 40	C-1132	AMPLIFIER-----TCTA	1	
	A-998	FILTER TCTA	1	B
	B1610	FILTER TCTA	1	C
	A-400	DISK-PAPER TCTA	1	
	A-289	SCREEN-MONEL-----TCTA	1	B
	A-1075	GROMMET-----TCTA	1	B
- 41	C-622	SERVO-LH TCTA	1	
- 42	A-928	GUIDE ASSEMBLY TCTA	1	
- 43	MS20219-2	PULLEY	1	
		ATTACHING PARTS		
	AN4-11A	BOLT	1	
		---*---		
- 44	B-674-5	CABLE ASSEMBLY TCTA	1	
- 45	A-628	SPRING-TAKE UP TCTA	1	
		ATTACHING PARTS		
- 46	A-427	CLAMP-SPRING-----TCTA	1	
	AN500A4-4	SCREW	1	
	AN960-4L	WASHER	1	
	MS20365-440C	NUT-LOCK	1	
		---*---		
- 47	0770012-20	SERVO ASSEMBLY-AILERON RH	1	
		ATTACHING PARTS		
	AN3-4A	BOLT	4	
	AN960-10L	WASHER	AR	
	MS20365-1032C	NUT	4	
	B-766-2	SUPPORT TCTA	1	
	B-903-2	SUPPORT TCTA	1	
		---*---		
	C-621	SERVO-RH TCTA	1	
	A-928	GUIDE ASSEMBLY TCTA	1	
	MS20219-2	PULLEY	1	
		ATTACHING PARTS		
	AN4-11A	BOLT	1	
		---*---		
	B-674-5	CABLE ASSEMBLY TCTA	1	
	A-628	SPRING-TAKE UP TCTA	1	
		ATTACHING PARTS		
	A-427	CLAMP-SPRING-----TCTA	1	
	AN500A4-4	SCREW	1	
	AN960-4L	WASHER	1	
	MS20365-440C	NUT-LOCK	1	
		---*---		
- 48	0770012-15	CLAMP-CABLE	2	
		ATTACHING PARTS		
- 49	AN3-4A	BOLT	4	
- 50	AN960-10L	WASHER	4	
- 51	MS20365-1032C	NUT	4	
		---*---		
- 52	0770012-18	COVER-CABLE CLAMP	2	
- 53	49166-21	HARNESS BAND UC	5	
		ATTACHING PARTS		
	S-1021Z-6-8	SCREW CESSNA STANDARD	1	
		---*---		

CONTINUED ON PAGE 319

FIGURE AND INDEX NO.	PART NUMBER	DESCRIPTION 1 2 3 4 5 6 7	UNITS PER ASSY	USABLE ON CODE
120B- 54	49160	HARNESS BAND UC	1	
- 55	MS21919DG18	CLAMP	1	
		ATTACHING PARTS		
	S-1021Z-8-10	SCREW CESSNA STANDARD	1	
	NAS446-4-3	NUT	1	
		---*---		
- 56	0770011-16	COVER PLATE	1	
- 57	MS35489-17	GROMMET	1	
- 58	0770011-17	STRAP-HOSE	1	
- 59	0770012-13	CLAMP	2	
		VACUUM SYSTEM INSTALLATION-TACTAIR SEE FIGURE 120B	NP	
		AUTO PILOT INSTALLATION-TACTAIR T-2	NP	A
		TACTAIR T-1 AUTO PILOT INSTALLATION	NP	
- 60	0770012-7	GYRO-DIRECTIONAL	1	
		ATTACHING PARTS		
	AN520C10R16	SCREW	4	
		---*---		
- 61	B-296-58	HOSE-----.09 ID PINK---- 24 IN. LONG TCTA ----	1	
- 62	B-296-59	HOSE-----.09 ID BROWN 24 IN. LONG TCTA ----	1	
- 63	0770012-13	CLAMP	2	
-63A	0770012-13	CLAMP	2	
- 64	0770012-9	ADJUSTER ASSEMBLY-SENSITIVITY	1	
		ATTACHING PARTS		
- 65	0770012-39	CLAMP	1	
- 66	S-1021Z-6-8	SCREW CESSNA STANDARD	2	
	NAS395-5-3	NUT	2	
		---*---		
	A-953	SCREW-ADJUSTMENT TCTA	1	
- 67	0770012-17	TEE	2	
- 68	B-296-5	HOSE .09 ID BLUE 4 IN. LONG TCTA	AR	
- 69	B-296-4	HOSE .09 ID YELLOW---- 4 IN. LONG TCTA	AR	
- 70	0770012-13	CLAMP	4	
- 71	A-979	HOSE .38 ID BULK ITEM 3 FEET LONG-----TCTA ----	AR	
- 72	AN737RM22	CLAMP	2	

A---180 SERIAL 50356 THRU 18050996
182 SERIAL 51557 THRU 18253290
B---180 SERIAL 50356 THRU 50867
182 SERIAL 51557 THRU 52893
C---180 SERIAL 50868 THRU 18050996
182 SERIAL 52894 THRU 18253290
NOTE. FOR ACCESSORY KIT LISTINGS REFER TO
PAGES 372 THRU 374B

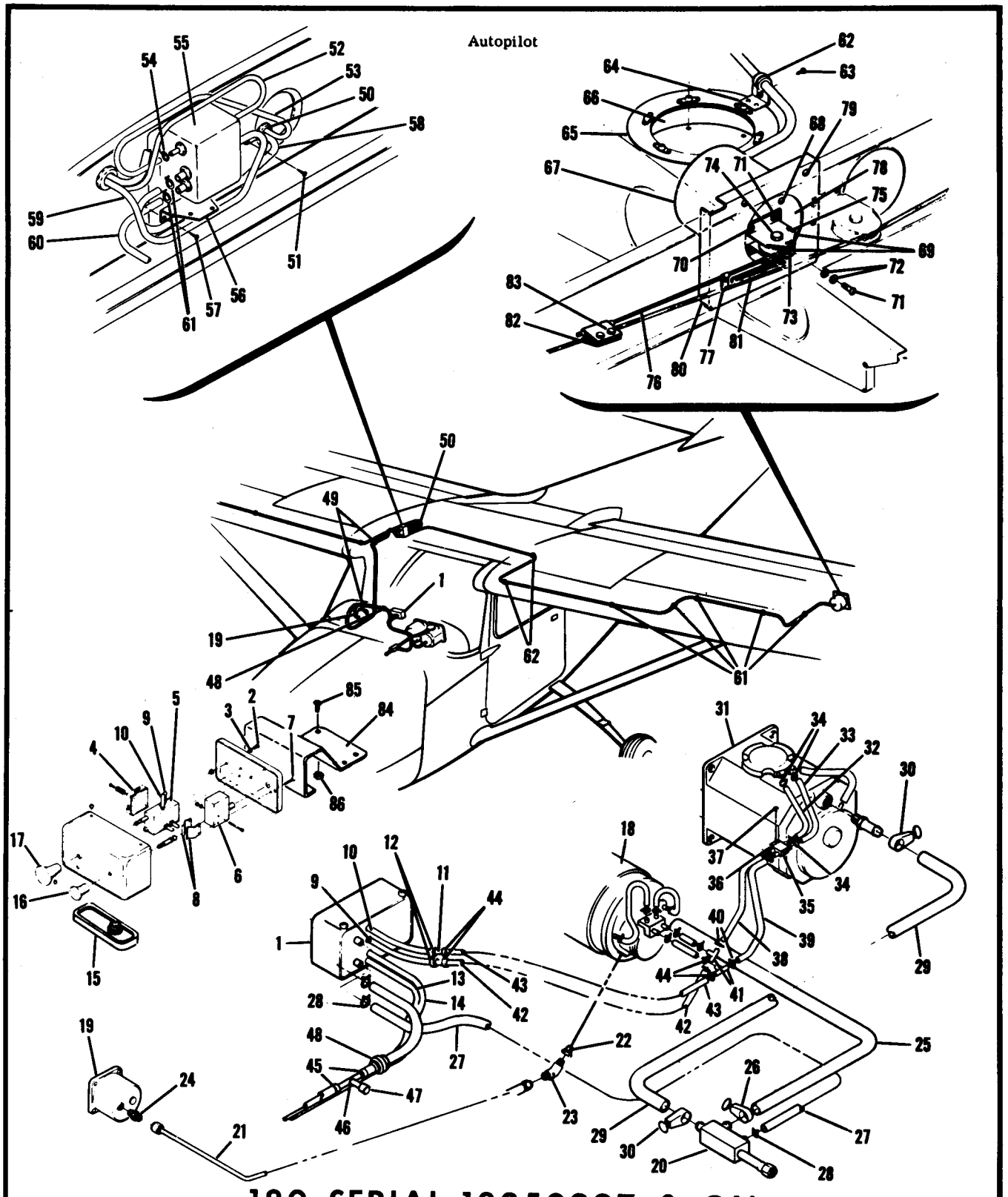

Figure 120C Tactair T-2 Autopilot Installation

FIGURE AND INDEX NO.	PART NUMBER	DESCRIPTION 1 2 3 4 5 6 7	UNITS PER ASSY	USABLE ON CODE
120C-		AUTO PILOT INSTALLATION-TACTAIR T-2	NP	A
- 1	0770012-5	UNIT ASSEMBLY-CONTROL------ 180 SERIAL	1	
		ATTACHING PARTS		
- 2	AN500C4-7	SCREW 18050997 & ON	3	
- 3	AN960-4L	WASHER	3	
		---*---		
- 4	A-1106	FILTER TCTA 182 SERIAL	1	
	A-1108	DISC-PAPER TCTA	1	
	A-1105	GASKET TCTA 18253291 & ON	1	
- 5	C-915	TRIM ASSEMBLY-ROLL TCTA	1	
		ATTACHING PARTS		
	AN507-440-5	SCREW	2	
		---*---		
- 6	C-914	BODY ASSEMBLY TCTA	1	
		ATTACHING PARTS		
- 7	AN507-440-5	SCREW	2	
		---*---		
	AN6227B1	O RING	1	
- 8	A-911	SPRING TCTA	2	
- 9	B-296-7	HOSE-----.09 ID BLUE---- 6.76 IN. LG. TCTA ----	1	
- 10	B-296-8	HOSE-----.09 ID YELLOW 6.1875 IN. LG. TCTA	1	
- 11	A-1213	CONNECTOR-HOSE-----TCTA	2	
- 12	A-482	CLAMP TCTA	2	
- 13	B-296-17	HOSE-----.09 ID YELLOW 18 IN. LG. TCTA ----	1	
- 14	B-296-18	HOSE-----.09 ID BLUE---- 18 IN. LG. TCTA	1	
- 15	B-1610	FILTER TCTA	1	
- 16	0713303-9	KNOB	1	
- 17	0713303-11	KNOB ASSEMBLY	1	
- 18	0770012-6	GYRO-HORIZONTAL	1	
		ATTACHING PARTS		
	AN526C1032R16	SCREW	4	
		---*---		
- 19	0311057-2	GAGE-SUCTION WHEN EXHAUSTED USE S-1300N1	1	
	S-1300N1	GAGE-SUCTION	1	
		ATTACHING PARTS		
	AN507BG32R12	SCREW	4	
		---*---		
- 20	0770012-8	TEE ASSEMBLY-RESTRICTOR	1	
	M74CR524-12E	SET SCREW-----FLN	1	
- 21	S-1168-2-22	HOSE ASSEMBLY	1	
		ATTACHING PARTS		
- 22	AN912-1D	BUSHING	1	
- 23	AN823-2D	ELBOW	1	
- 24	AN816-2D	NIPPLE	1	
		---*---		
- 25	1200078-7	HOSE	1	
- 26	AN737RM22	CLAMP	2	
- 27	A-978	TUBE-RESTRICTOR TEE TO CONTROL UNIT-----IN. LG.	AR	
		BULK ITEM TCTA REF 1200078-13		
		ATTACHING PARTS		
- 28	CR6	CLAMP CRB	2	
		---*---		
- 29	1200078-2	HOSE	1	
- 30	AN737RM22	CLAMP	2	
- 31	1200077-39	GYRO-DIRECTIONAL	1	
		ATTACHING PARTS		
	AN526C1032R16	SCREW	8	
		---*---		
- 32	B-296-58	HOSE-----.09 ID PINK---- 24 IN. LG. TCTA	1	
- 33	B-296-59	HOSE-----.09 ID BROWN 24 IN. LG. TCTA ----	1	
		ATTACHING PARTS		
- 34	0770012-13	CLAMP	4	
		---*---		
- 35	0770012-9	ADJUSTER ASSEMBLY-SENSITIVITY	1	
		ATTACHING PARTS		
- 36	0770012-39	CLAMP	1	
- 37	S-1022Z-6-8	SCREW	2	
	NAS395-5-3	NUT	2	
		---*---		
- 38	B-296-5	HOSE .09 ID BLUE 4 IN. LG. TCTA	1	
- 39	B-296-4	HOSE .09 ID YELLOW---- 4 IN. LG.-----TCTA	1	
		ATTACHING PARTS		
- 40	0770012-13	CLAMP	4	
		---*---		

S-NOS APPEARING ON THIS PAGE ARE CESSNA STANDARD

CONTINUED ON PAGES 319C & 319D

FIGURE AND INDEX NO.	PART NUMBER	DESCRIPTION 1 2 3 4 5 6 7	UNITS PER ASSY	USABLE ON CODE
120C- 41	0770012-17	TEE	2	
- 42	1200078-12	HOSE	1	
- 43	1200078-11	HOSE	1	
		ATTACHING PARTS		
- 44	A-482	CLAMP TCTA	4	
- 45	CS-6	CLAMP CRB	2	
- 46	0770012-43	TEE-TEST	1	
- 47	1200077-15	CAP-TEST TEE	1	
- 48	49167-21	HARNESS BAND UC	1	
		ATTACHING PARTS		
	S-1021Z-6-8	SCREW	1	
		---*---		
- 49	MS21919WDG-9	CLAMP	2	
		ATTACHING PARTS		
	NAS221-5	SCREW	1	
	MS20364-1032C	NUT	1	
		---*---		
- 50	49166-21	HARNESS BAND UC	1	
		ATTACHING PARTS		
- 51	S-1021Z-6-8	SCREW	1	
		---*---		
- 52	1200078-10	HOSE-CONTROL UNIT TO AMPLIFIER-----BLUE	1	
- 53	1200078-15	HOSE-CONTROL UNIT TO AMPLIFIER-----YELLOW	1	
		ATTACHING PARTS		
- 54	0770012-13	CLAMP	2	
		---*---		
- 55	0770012-45	AMPLIFIER-AILERON	1	
- 56	1200077-10	BRACKET-AMPLIFIER	1	
		ATTACHING PARTS		
- 57	AN515-8R8	SCREW	2	
	AN960-8	WASHER	2	
	MS20365-832C	NUT	2	
		---*---		
- 58	1200077-8	HOSE-AILERON AMPLIFIER TO TEST TEE	1	
- 59	1200077-25	HOSE-AILERON AMPLIFIER TO RH AILERON SERVO	1	
- 60	1200077-26	HOSE-AILERON AMPLIFIER TO LH AILERON SERVO	1	
- 61	CS-6	CLAMP CRB	5	
- 62	49165-21	HARNESS BAND UC	7	
		ATTACHING PARTS		
- 63	S-1021Z-6-8	SCREW	1	
		---*---		
- 64	1200077-12	CLIP	2	
- 65	S-1072-1	DOUBLER ASSEMBLY	1	
- 66	S-225-6	PLATE-INSPECTION	1	
		ATTACHING PARTS		
	S-1022Z-8-8	SCREW	6	
		---*---		
- 67	1200077-5	SERVO ASSEMBLY-AILERON	2	
		ATTACHING PARTS		
- 68	AN515-8R8	SCREW	4	
	AN960-8	WASHER	4	
		---*---		
- 69	A-1748	BRACKET-PULLEY-----TCTA	2	
		ATTACHING PARTS		
- 70	AN515-8-14	SCREW	2	
- 71	AN515-8-7	SCREW	2	
- 72	AN960-8	WASHER	5	
		---*---		
- 73	G-37	PULLEY ATPU	1	
		ATTACHING PARTS		
- 74	AN3-6A	BOLT	1	
	AN960-10L	WASHER	1	
	MS20364-1032C	NUT	1	
		---*---		
- 75	AN381-2-12	PIN-COTTER	2	
- 76	B-1341-8	CABLE ASSEMBLY-----TCTA	1	
- 77	A-427	CLAMP TCTA	1	
		ATTACHING PARTS		
	AN500A4-4	SCREW	1	
	AN960-8	WASHER	1	
		S-NOS APPEARING ON THIS PAGE ARE CESSNA STANDARD		
		CONTINUED ON PAGE 319D		

FIGURE AND INDEX NO.	PART NUMBER	DESCRIPTION 1 2 3 4 5 6 7	UNITS PER ASSY	USABLE ON CODE
120C-	AN960-4	WASHER	1	
	MS20365-440C	NUT	1	
		---*---		
- 78	1200077-9	PLATE-MOUNTING	2	
		ATTACHING PARTS		
- 79	AN515-8R8	SCREW	4	
	AN960-8	WASHER	4	
	MS20365-832C	NUT	4	
		---*---		
- 80	1200077-3	DOUBLER-REAR SPAR LH	1	
	1200077-4	DOUBLER-REAR SPAR RH	1	
- 81	1200077-7	SPRING-TAKE-UP	1	
- 82	1200077-8	CLAMP-CABLE	1	
		ATTACHING PARTS		
- 83	AN3-3A	BOLT	2	
	AN960-10	WASHER	2	
	MS20364-1032C	NUT	2	
		---*---		
- 84	0513194-1	MOUNTING	1	
		ATTACHING PARTS		
- 85	S-1021Z-8-8	SCREW	4	
- 86	NAS446-4-3	NUT	4	
		---*---		
		A---180 SERIAL 18050997 & ON 182 SERIAL 18253291 & ON		

Auto Pilot (Cont)

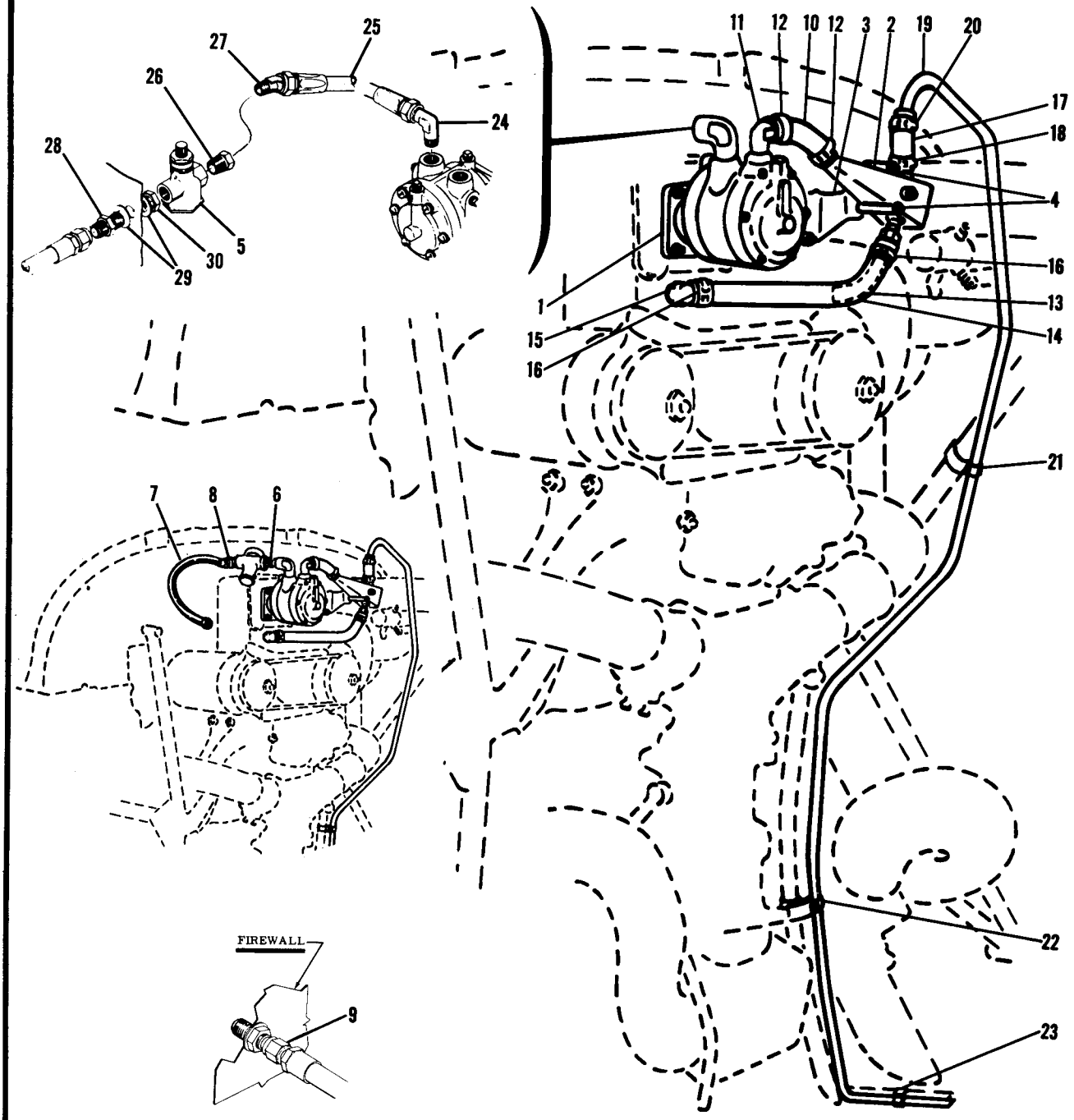

180 SERIAL 50356 & ON
182 SERIAL 51557 & ON

Figure 120D. Vacuum System for Tactair Auto Pilot

FIGURE AND INDEX NO.	PART NUMBER	DESCRIPTION 1 2 3 4 5 6 7	UNITS PER ASSY	USABLE ON CODE
120D-		SYSTEM INSTALLATION-TACTAIR VACUUM	NP	A
- 1	0750104-1	PUMP-VACUUM	1	
	0750104-2	PUMP-VACUUM-----ALT	1	
	0750104-3	PUMP-VACUUM-----ALT	1	
	0750104-3	PUMP-VACUUM-----ALT	1	
	AN4050-1	BUSHING USED WITH 0750104-1 PUMP ONLY	1	
		ATTACHING PARTS		
	AN520-10R14	SCREW	1	
	AN935-10L	LOCKWASHER	1	
		---*---		
	0750104-2	PUMP-VACUUM-----ALTERNATE	1	
	0750104-3	PUMP-VACUUM-----ALTERNATE	1	
- 2	0750103-1	SEPARATOR-OIL	1	
		ATTACHING PARTS		
- 3	0750100-11	BRACKET	1	
- 4	AN3-15A	BOLT	2	
	AN960D10L	WASHER	2	
	MS20365-1032C	NUT	2	
		---*---		
- 5	0813619-2	VALVE-SUCTION RELIEF	1	
		ATTACHING PARTS		
- 6	AN912-4D	BUSHING	1	B
	AN911-3D	UNION	1	B
	AN914-3D	ELBOW	1	B
		---*---		
- 7	S-1168-6-7	HOSE ASSEMBLY-RELIEF VALVE TO FIREWALL	1	B
		ATTACHING PARTS		
- 8	AN912-4D	BUSHING	1	B
	MS20822-6-6D	ELBOW	1	B
- 9	AN832-6D	UNION	1	B
	AN960D916	WASHER	2	B
	AN924-6D	NUT	1	B
		---*---		
- 10	S-51-8	HOSE-PUMP TO OIL SEPARATOR---- 3.25 IN LG BULK ITEM----	1	
		REF S-51-8-13		
		ATTACHING PARTS		
- 11	AN842-8	ELBOW	1	
- 12	NAS397-14	CLAMP TINN A3122-14-1	2	
		---*---		
- 13	0750100-12	TUBE-INSERT	1	
- 14	S-51-8	HOSE-OIL SEPARATOR TO ENGINE 9.00 IN LG BULK ITEM	1	
		REF S-51-8-36		
		ATTACHING PARTS		
- 15	AN844-8	ELBOW	1	

180 SERIAL 50356 & ON

182 SERIAL 51557 & ON

CONTINUED ON PAGE 321A

FIGURE AND INDEX NO.	PART NUMBER	DESCRIPTION 1 2 3 4 5 6 7	UNITS PER ASSY	USABLE ON CODE
120D- 16	NAS397-14	CLAMP TINN A3122-14-1 ---------- ---*---	2	
- 17	S-51-8	HOSE-VENT 2.00 IN LG BULK ITEM REF S-51-8-8---- ATTACHING PARTS	1	
- 18	NAS397-14	CLAMP TINN A3122-14-1 ---------- ---*---	1	
- 19	0500106-251	LINE-VENT ---------- ATTACHING PARTS	1	
- 20	NAS397-14	CLAMP TINN A3122-14-1 ----------	1	
- 21	AN742D8	CLAMP ----------	1	
	AN742D14	CLAMP ----------	1	
	AN3-4A	BOLT ----------	1	
	MS20365-1032C	NUT ----------	1	
- 22	AN742D8	CLAMP ----------	1	
	A2981A-12-27	CLAMP TINN ----------	1	
	S-1021Z-10-8	SCREW CESSNA STANDARD ----------	1	
- 23	A3047A-12-92	CLAMP TINN ----------	1	
	MS21919DG8	CLAMP ----------	1	
	S-1021Z-10-10	SCREW CESSNA STANDARD ---------- ---*---	1	
- 24	MS20822-6-6B	ELBOW ----------	1	C
- 25	S-1168-6-6 1/2	HOSE ASSEMBLY ---------- ATTACHING PARTS	1	C
- 26	AN912-2	BUSHING-REDUCER ----------	1	C
- 27	AN823-6B	ELBOW ---------- ---*---	1	C
- 28	0550177-1	FITTING ----------	1	C
- 29	AN960D916	WASHER----------	2	C
- 30	AN924-6D	NUT ----------	1	C

A---180 SERIAL 50356 & ON
182 SERIAL 51557 & ON
B---180 SERIAL 50356 THRU 18051110
182 SERIAL 51557 & ON
C---180 SERIAL 18051111 & ON
NOTE. FOR ACCESSORY KIT LISTINGS REFER TO PAGES 372 THRU 374B
S-NOS APPEARING ON THIS PAGE ARE CESSNA STANDARD

This page intentionally left blank.

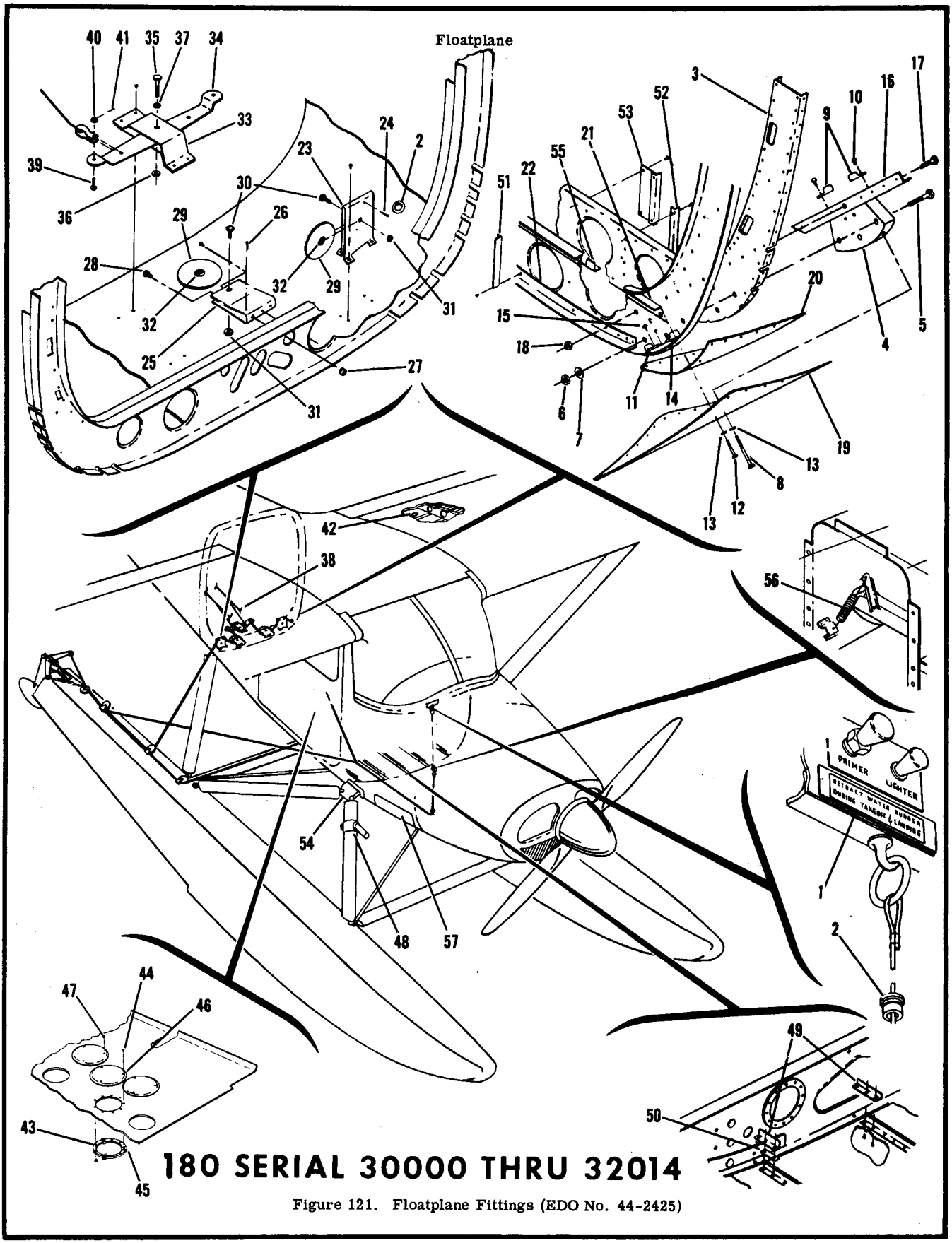

Figure 121. Floatplane Fittings (EDO No. 44-2425)

FIGURE AND INDEX NO.	PART NUMBER	DESCRIPTION 1 2 3 4 5 6 7	UNITS PER ASSY	USABLE ON CODE
121-		FLOATPLANE FITTINGS INSTALLATION-----EDO NO. 44-2425---------	NP	A
- 1	0341007	DECAL-WATER RUDDER RETRACT----------	1	D
- 2	S-338-7	FAIRLEAD CESSNA STANDARD ----------	3	
- 3	0742111	REINFORCEMENT-BULKHEAD ----------	1	B
- 4	0541129	BLOCK-STRUT ATTACHMENT AFT----------	2	
		ATTACHING PARTS		
- 5	AN4-12A	BOLT ----------	5	
- 6	MS20365-428C	NUT ----------	5	
- 7	AN960-416	WASHER----------	5	
- 8	AN5-32A	BOLT ----------	2	
- 9	22NA17A-054	NUTPLATE EN ----------	2	
- 10	S-1021Z-8-4	SCREW CESSNA STANDARD ----------	2	
		---*---		
- 11	0541128	BLOCK-STRUT ATTACHMENT FORWARD----------	2	
		ATTACHING PARTS		
- 12	AN5-13A	BOLT ----------	2	
- 13	AN960-516	WASHER----------	4	
- 14	22NA17A-054	NUTPLATE EN ----------	2	
- 15	S-1021Z-8-4	SCREW CESSNA STANDARD ----------	2	
		---*---		
- 16	0541131	ANGLE-REINFORCEMENT LH ----------	1	
	0541131-1	ANGLE-REINFORCEMENT RH ----------	1	
		ATTACHING PARTS		
- 17	AN3-4A	BOLT ----------	1	
- 18	MS20365-1032C	NUT ----------	1	
		---*---		
- 19	0341118	DOUBLER-RH ----------	1	
	0341118	DOUBLER-LH ----------	1	C
	0341118-1	DOUBLER-LH ----------	1	D
- 20	0541126	SPACER-RH ----------	1	
	0541126	SPACER-LH ----------	1	C
	0541126-1	SPACER-LH ----------	1	D
- 21	0541130	ANGLE-BULKHEAD REINFORCEMENT UPPER ----------	1	
- 22	0541127	ANGLE-BULKHEAD REINFORCEMENT LOWER ----------	1	
- 23	0742110-1	BRACKET-LH ----------	1	
	0742110-2	BRACKET-RH ----------	1	
		ATTACHING PARTS		
- 24	MS24665-134	PIN-COTTER ----------	1	
		---*---		
- 25	0742110-3	BRACKET-PULLEY ----------	2	
		ATTACHING PARTS		
- 26	MS24665-134	PIN-COTTER ----------	1	
- 27	MS20365-1032C	NUT ----------	1	
- 28	AN520-10R6	SCREW ----------	1	
		---*---		
- 29	S-378-2	PULLEY-WATER RUDDER CABLE ----CESSNA STANDARD----------	4	
		ATTACHING PARTS		
- 30	AN3-3A	BOLT ----------	1	
- 31	MS20365-1032C	NUT ----------	1	
		---*---		
- 32	NAS382-1	BUSHING-PULLEY ----------	4	
- 33	0742110-16	BRACKET ASSEMBLY-BELLCRANK SUPPORT ----------	1	
- 34	0742110-17	BELLCRANK ASSEMBLY-WATER RUDDER CABLE ----------	1	
		ATTACHING PARTS		
- 35	AN24-15A	BOLT ----------	1	
- 36	MS20364-428C	NUT ----------	1	
- 37	AN960-416L	WASHER----------	1	
		---*---		
- 38	0510105-130	CABLE-WATER RUDDER RETRACT----------	2	
		ATTACHING PARTS		
- 39	AN23-10	BOLT ----------	2	
- 40	AN320-3	NUT ----------	2	
- 41	MS24665-132	PIN-COTTER ----------	2	
		---*---		

180 SERIAL 30000 THRU 32014

CONTINUED ON PAGE 324

FIGURE AND INDEX NO.	PART NUMBER	DESCRIPTION 1 2 3 4 5 6 7	UNITS PER ASSY	USABLE ON CODE
121- 42	S-349	GROMMET-DRAIN CESSNA STANDARD	AR	
- 43	S-237-1	DOUBLER-INSPECTION OPENING---- CESSNA STANDARD	2	
		ATTACHING PARTS		
- 44	S-1021Z-8-6	SCREW CESSNA STANDARD	3	
- 45	NAS395-14-3	NUT TIN A1274-8Z-3	3	
		---*---		
- 46	S-225-1	PLATE-INSPECTION OPENING COVER-----CESSNA STANDARD	3	
		ATTACHING PARTS		
- 47	49330	TRIMOUNT STUD UC	1	
		---*---		
- 48	0541137-8	STEP ASSEMBLY	2	F
	0541137-11	STEP ASSEMBLY	2	E
		ATTACHING PARTS		
	AN3-4A	BOLT	2	F
	AN3-7A	BOLT	2	E
	AN960-10	WASHER	2	
	MS20365-1032C	NUT	2	
		---*---		
- 49	0742110-19	SPLICE-ANGLE	5	
- 50	0742110-20	SHIM	4	
- 51	0742110-7	ANGLE-FORWARD SIDE	2	
- 52	0742110-8	ANGLE-AFT SIDE	2	
- 53		DELETED, OBSOLETE		
- 54	0742110-5	SEAL-FUSELAGE	2	
	0742110-6	PLATE-SEAL COVER	2	
- 55	0541127-2	ANGLE-STIFFENER	1	
- 56	0310196-4	SPRING-RUDDER RETURN RH	1	F
	0310196-3	SPRING-RUDDER RETURN LH	1	F
	0310196-10	SPRING-RUDDER RETURN RH	1	E
	0310196-11	SPRING-RUDDER RETURN LH	1	E
- 57	0742116-2	PLATE-REINFORCEMENT LH	1	E
	0742116-3	PLATE-REINFORCEMENT	1	E
		A---180 SERIAL 30000 THRU 32014		
		B---180 SERIAL 30000 THRU 30654		
		C---180 SERIAL 30000 THRU 30639		
		D---180 SERIAL 30640 THRU 32014		
		E---180 SERIAL 31260 THRU 32014		
		F---180 SERIAL 30000 THRU 31259		
		NOTE. FOR ACCESSORY KIT LISTINGS REFER TO PAGES 372 THRU 374B		

FIGURE AND INDEX NO.	PART NUMBER	DESCRIPTION 1 2 3 4 5 6 7	UNITS PER ASSY	USABLE ON CODE
122-		FLOAT PLANE FITTINGS INSTALLATION EDO 249-2870	NP	A
- 1	0341007-5	PLACARD WATER RUDDER	1	
		ATTACHING PARTS		
- 2	S-1021Z-4-5	SCREW CESSNA STANDARD	2	
		---*---		
- 3	S-338-7	BUSHING CESSNA STANDARD	1	B
- 4	S-339-2	CLIP CESSNA STANDARD	1	B
- 5	0310196-10	SPRING-RH	1	B
	0310196-11	SPRING-LH	2	
- 6	0541129	BLOCK-STRUT ATTACHMENT AFT		
		ATTACHING PARTS		
- 7	AN4-12A	BOLT	5	
- 8	MS20365-428C	NUT	5	
- 9	AN960-416	WASHER	5	
- 10	AN5-32A	BOLT	2	
- 11	22NA17A-054	NUT EN	2	
- 12	S-1021Z-8-4	SCREW CESSNA STANDARD	2	
		---*---		
- 13	0541128	BLOCK-STRUT ATTACHMENT FORWARD	2	
		ATTACHING PARTS		
- 14	AN5-15A	BOLT	2	
- 15	AN960-516	WASHER	2	
- 16	22NA17A-054	NUT EN	2	
- 17	S-1021Z-8-4	SCREW CESSNA STANDARD	2	
		---*---		
- 18	0742115-33	ANGLE-BLOCK REINFORCEMENT LH	1	B
	0742115-34	ANGLE-BLOCK REINFORCEMENT RH	1	B
		ATTACHING PARTS		
- 19	AN3-4A	BOLT	2	
- 20	MS20365-1032C	NUT	2	
		---*---		
- 21	0341118	DOUBLER RH	1	
	0341118-1	DOUBLER LH	1	
- 22	0541126	SPACER-FUSELAGE SKIN LAP RH	1	
	0541126-1	SPACER-FUSELAGE SKIN LAP LH	1	
- 23	0742115-51	PLATE-OUTER SPLICE RH	1	
	0742115-50	PLATE-OUTER SPLICE LH	1	
- 24	0742115-3	PLATE-INNER SPLICE	2	B
- 25	0742115-16	ANGLE-REINFORCEMENT UPPER	1	
	0742115-19	ANGLE-REINFORCEMENT LOWER AFT	1	
- 26	0742115-20	ANGLE-REINFORCEMENT LOWER FORWARD	1	
- 27	NAS680A4	NUTPLATE	3	
- 28	0742110-7	ANGLE-FORWARD SIDE	2	
- 29	0742115-28	ANGLE-AFT SIDE	2	
- 30	S-349	GROMMET-DRAIN CESSNA STANDARD	10	
- 31	0742115-11	ANGLE-FLOORBOARD SUPPORT LH	1	B
- 32	0742115-12	ANGLE-FLOORBOARD SUPPORT RH	1	B
- 33	0742115-31	ANGLE-FLOORBOARD SUPPORT RH	1	B
- 34	S-237-1	DOUBLER-INSPECTION OPENING CESSNA STANDARD	5	
- 35	S-225-1	COVER-INSPECTION OPENING CESSNA STANDARD	5	
		ATTACHING PARTS		
- 36	49330	TRIMOUNT STUD UC	3	
		---*---		
- 37	0742115-21	ANGLE-STIFFENER	1	
- 38	0742115-22	ANGLE-STIFFENER	1	
- 39	0710000-38	ANGLE-STIFFENER	2	B
	0710025-1	ANGLE-STIFFENER	2	C
- 40	0742115-5	BULKHEAD-REINFORCE LH	1	
- 41	0742115-6	BULKHEAD-REINFORCE RH	1	
- 42	0742115-7	CLIP-BAGGAGE DOOR JAMB	1	
- 43	0711101-20	JAMB-BAGGAGE DOOR LOWER	1	
- 44	0742115-4	ANGLE	1	
- 45	0742110-19	SPLICE-ANGLE	5	
- 46	0742110-20	SHIM-SPLICE ANGLE	4	
- 47	0541137-11	STEP ASSEMBLY	2	
		ATTACHING PARTS		
- 48	AN3-7A	BOLT	2	
	AN960-10	WASHER	2	
	MS20365-1032C	NUT	2	
		---*---		
- 49	AN837-4D	ELBOW-45 DEGREES	1	
	AN960D716L	WASHER	1	
	AN924-4D	NUT	1	

180 SERIAL 32015 & ON

CONTINUED ON PAGES 326 & 327

Floatplane (Cont)

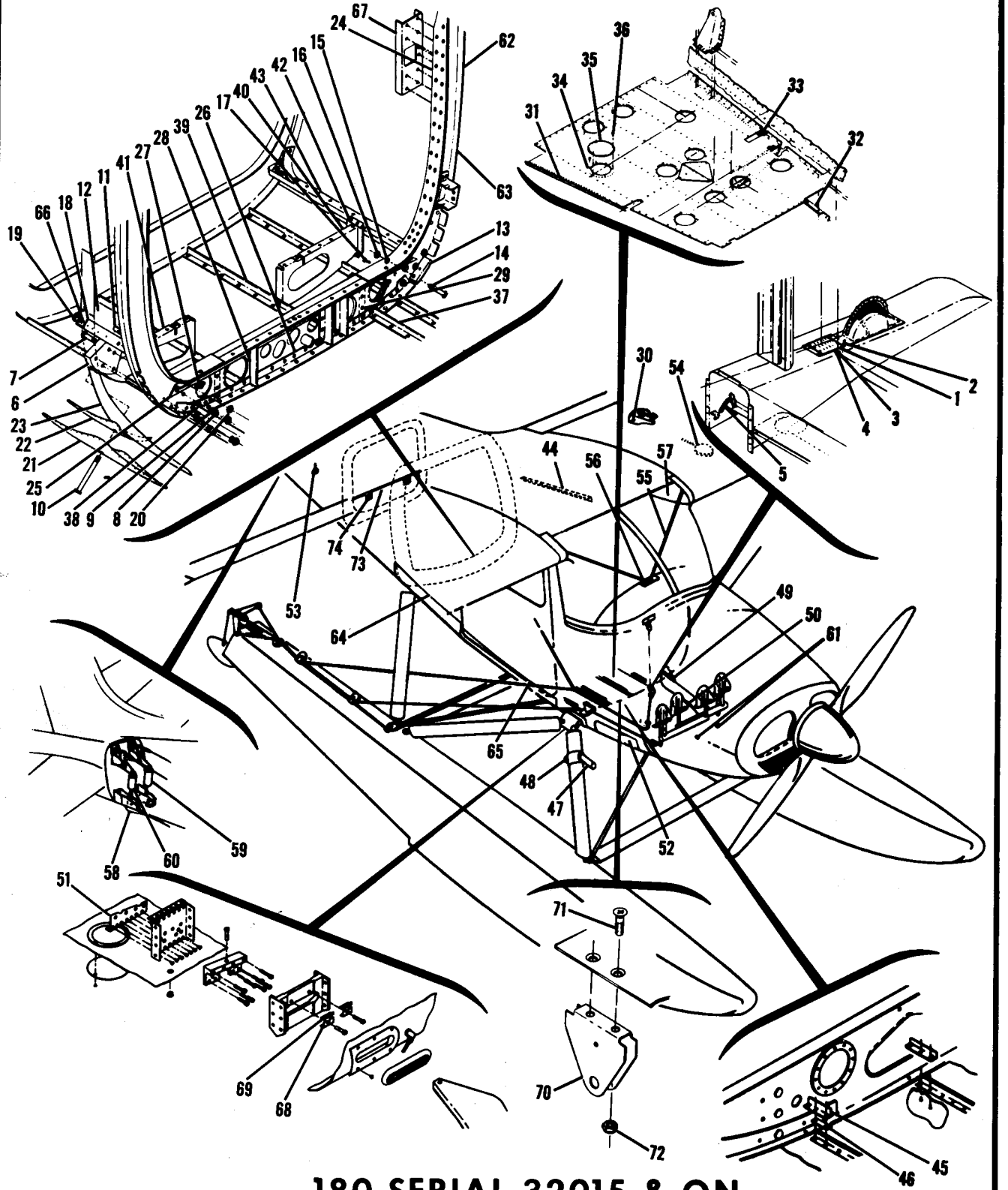

180 SERIAL 32015 & ON

Figure 127. Floatplane Fittings (Edo No. 249-2870)

FIGURE AND INDEX NO.	PART NUMBER	DESCRIPTION 1 2 3 4 5 6 7	UNITS PER ASSY	USABLE ON CODE
122- 50	A2980A-27	CLAMP TIN	1	
	A2981A-27	CLAMP TIN	1	
		ATTACHING PARTS		
	S-1021Z-10-8	SCREW CESSNA STANDARD	1	
		---*---		
- 51	0742115-25	ANGLE-LANDING GEAR SUPPORT LOWER RH	1	D
	0742115-26	ANGLE-LANDING GEAR SUPPORT LOWER LH	1	D
- 52	0742116-2	REINFORCEMENT LH ONLY	1	
	0742116-3	REINFORCEMENT RH	1	
- 53	0422344	EYEBOLT	1	
		ATTACHING PARTS		
	MS20365-524C	NUT	1	
		---*---		
- 54	0720004	DRAIN INSTALLATION-FUEL TANK FILLER NECK WELL-----SEE FIGURE 96	1	
	0742110-5	SEAL-FUSELAGE	2	
	0742110-6	PLATE-COVER SEAL	2	
	AN924-4	SEAL	6	
- 55	0513003-19	BRACE ASSEMBLY	1	C
		ATTACHING PARTS		
- 56	0713156-1	DOUBLER	1	
	AN4-6A	BOLT	2	
	MS20365-428C	NUT	2	
		---*---		
- 57	0711133-1	SHIELD ASSY-LH	1	C
	0711133-2	SHIELD ASSY-RH	1	C
	0413235	GROMMET	1	
- 58	0742115-44	FAIRING LH	1	C
	0742115-45	FAIRING RH	1	C
- 59	0742119-1	SPRING & CABLE ASSEMBLY-FLOATPLANE	2	C
		ATTACHING PARTS		
- 60	AN23-11	BOLT	2	
	AN310-3	NUT	2	
	AN960-10	WASHER	2	
	MS24665-134	PIN-COTTER	2	
		---*---		
- 61	0742373	STOP-COWL FLAP	2	C
- 62	0742115-37	SPLICE	2	C
- 63	0711112-5	BULKHEAD ASSY-STA 90.0	1	C
- 64	0742117-4	DOUBLER-RH REAR	1	E
	0742117-5	DOUBLER-LH REAR	1	E
- 65	0742117-2	DOUBLER-RH FORWARD	1	E
	0742117-3	DOUBLER-LH FORWARD	1	E
- 66	0742115-18	ANGLE ASSY RH	1	
	0742115-17	ANGLE ASSY LH	1	
	0500106-176	BRAKE LINE SEE FIGURE 87	1	B
	0751001-23	MOUNT-ENGINE SEE FIGURE 76	1	F
	0751001-25	MOUNT-ENGINE SEE FIGURE 77	1	C
- 67	0742115-15	REINFORCEMENT-BULKHEAD	1	
- 68	0441115-3	WEDGE	4	
- 69	0741007-1	SHIM	AR	
- 70	0711059-1	BRACKET-PULLEY	2	
		ATTACHING PARTS		
- 71	AN507-1032R8	SCREW	2	
- 72	MS20365-1032C	NUT	2	
		---*---		
- 73	0742109-1	ANGLE	1	
- 74	0742108-1	PLATE	2	
	S-1050-1-3.15	GROMMET	2	

A---180 SERIAL 32015 & ON
B---180 SERIAL 32015 THRU 50661
C---180 SERIAL 50662 & ON
D---180 SERIAL 32015 THRU 32156
E---180 SERIAL 50106 & ON
F---180 SERIAL 32151 THRU 50661
NOTE. FOR ACCESSORY KIT LISTINGS REFER TO PAGES 372 THRU 374B

Floatplane (Cont)

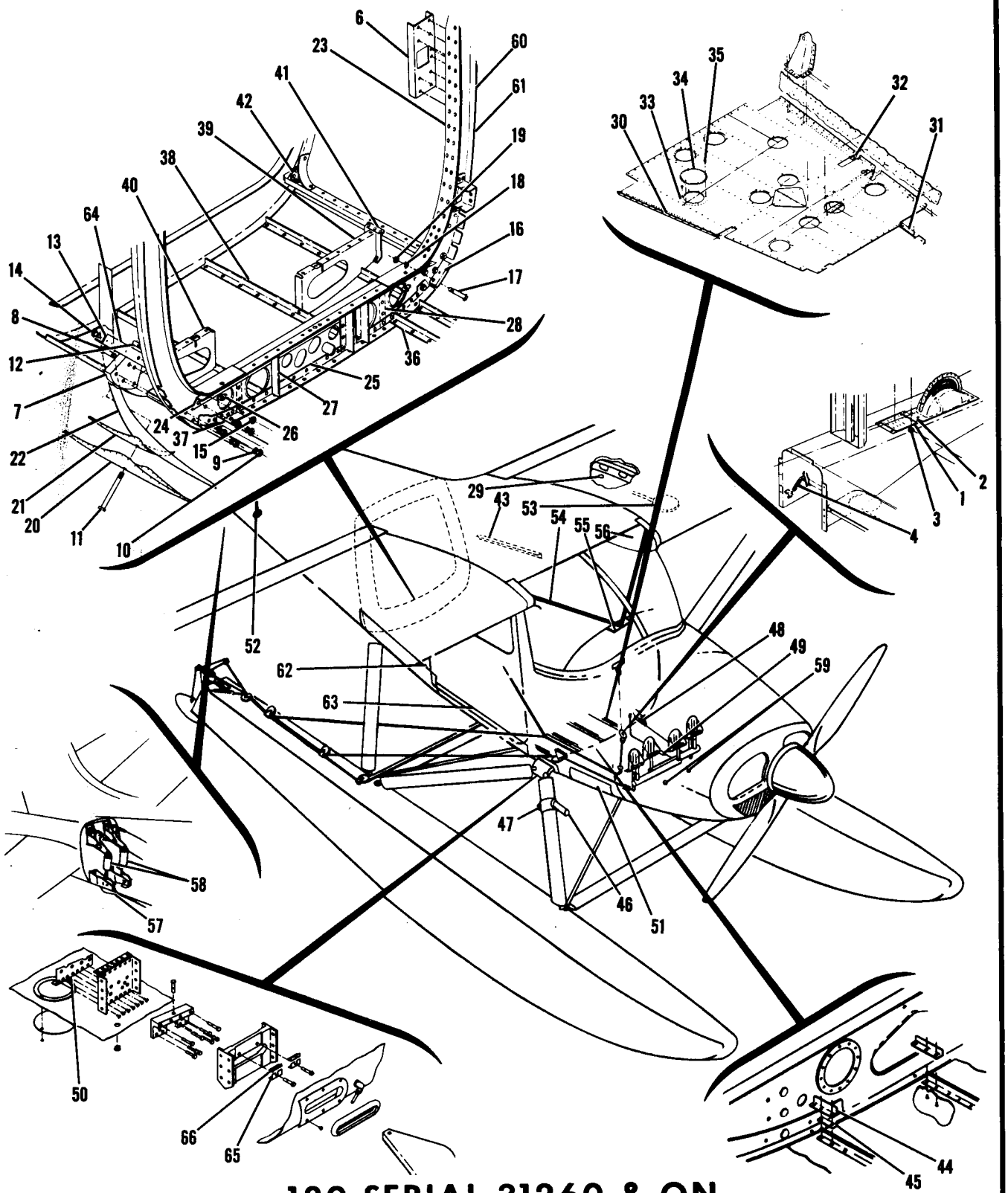

180 SERIAL 31260 & ON

Figure 123. Amphibian Fittings

FIGURE AND INDEX NO.	PART NUMBER	DESCRIPTION 1 2 3 4 5 6 7	UNITS PER ASSY	USABLE ON CODE
123-		AMPHIBIAN FITTINGS---------- **180 SERIAL** -------	NP	A
- 1	0742114	PLACARD-AMPHIBIAN ---------- **180 SERIAL** -------	1	B
		ATTACHING PARTS		
- 2	S-1021Z-6-6	SCREW CESSNA STANDARD --- **31260 & ON** ------	4	
		---*---		
- 3	S-338-7	FAIRLEAD-RETRACT CABLE CESSNA STANDARD ----------	1	
	S-339-2	CLIP-FAIRLEAD RETAINING CESSNA STANDARD ----------	1	
- 4	0310196-10	SPRING-RUDDER RETURN RH ----------	1	B
	0310196-11	SPRING-RUDDER RETURN LH ----------	1	B
- 5		DELETED, NEVER USED ----------		
- 6	0742115-15	REINFORCEMENT-BULKHEAD LH ONLY ----------	1	
- 7	0541129	BLOCK-STRUT ATTACHMENT AFT----------	2	
		ATTACHING PARTS		
- 8	AN4-12A	BOLT ----------	5	
- 9	AN960-416	WASHER----------	5	
- 10	MS20365-428C	NUT ----------	5	
- 11	AN5-32A	BOLT ----------	2	
- 12	22NA17A-054	NUTPLATE EN ----------	2	
		---*---		
- 13	0742115-33	ANGLE-BLOCK REINFORCEMENT LH ----------	1	B
	0742115-34	ANGLE-BLOCK REINFORCEMENT RH ----------	1	B
		ATTACHING PARTS		
- 14	AN3-4A	BOLT ----------	2	
- 15	MS20365-1032C	NUT ----------	2	
		---*---		
- 16	0541128	BLOCK-STRUT ATTACHMENT FORWARD----------	2	
		ATTACHING PARTS		
- 17	AN5-15A	BOLT ----------	2	
- 18	AN960D516	WASHER----------	2	
- 19	MS20365-428C		2	
		---*---		
- 20	0341118	DOUBLER-FUSELAGE RH ----------	1	
	0341118-1	DOUBLER-FUSELAGE LH ----------	1	
- 21	0541126	SPACER-FUSELAGE SKIN LAP RH ----------	1	
	0541126-1	SPACER-FUSELAGE SKIN LAP LH ----------	1	
- 22	0742115-1	PLATE-OUTER SPLICE RH----------	1	
	0742115-2	PLATE-OUTER SPLICE LH----------	1	
- 23	0742115-3	PLATE-INNER SPLICE ----------	2	B
- 24	0742115-16	ANGLE-REINFORCEMENT UPPER ----------	1	
	0742115-19	ANGLE-REINFORCEMENT LOWER AFT ----------	1	
- 25	0742115-20	ANGLE-REINFORCEMENT FORWARD ----------	1	
- 26	NAS680A4	NUTPLATE ----------	3	
- 27	0742110-7	ANGLE-FORWARD SIDE ----------	3	
- 28	0742115-28	ANGLE-AFT SIDE ----------	2	
- 29	S-349	GROMMET-DRAIN CESSNA STANDARD ----------	10	
- 30	0742115-11	ANGLE-FLOORBOARD SUPPORT LH ----------	1	B
- 31	0742115-12	ANGLE-FLOORBOARD SUPPORT RH ----------	1	B
- 32	0742115-31	ANGLE-FLOORBOARD SUPPORT RH ----------	1	B
- 33	S-237-1	DOUBLER-INSPECTION OPENING---- CESSNA STANDARD ----------	5	
- 34	S-225-1	COVER-INSPECTION OPENING CESSNA STANDARD ----------	5	
		ATTACHING PARTS		
- 35	49330	TRIMOUNT STUD UC ----------	3	
		---*---		
- 36	0742115-21	ANGLE-STIFFENER ----------	1	
- 37	0742115-22	ANGLE-STIFFENER ----------	1	
- 38	0710025-1	ANGLE-STIFFENER ----------	2	
- 39	0742115-5	BULKHEAD REINFORCEMENT LH ----------	1	
- 40	0742115-6	BULKHEAD REINFORCEMENT RH ----------	1	
- 41	0742115-7	CLIP-BAGGAGE DOOR JAMB ----------	1	
- 42	0711101-20	JAMB-BAGGAGE DOOR LOWER ----------	1	
- 43	0742115-4	ANGLE-FUSELAGE SIDE STIFFENER ----------	4	
- 44	0742110-19	SPLICE-ANGLE ----------	5	
- 45	0742110-20	SHIM-SPLICE ANGLE ----------	4	

CONTINUED ON PAGE 330

FIGURE AND INDEX NO.	PART NUMBER	DESCRIPTION 1 2 3 4 5 6 7	UNITS PER ASSY	USABLE ON CODE
123- 60	541137-11	STEP ASSEMBLY	2	
		ATTACHING PARTS		
- 47	AN3-7A	BOLT	2	
	AN960-10	WASHER	2	
	MS20365-1032C	NUT	2	
		---*---		
- 48	AN837-4D	ELBOW-45 DEGREES	1	
	AN960D716L	WASHER	1	
	AN924-4D	NUT	1	
- 49	A2980A-27	CLAMP TIN	1	
	A2981A-27	CLAMP TIN	1	
		ATTACHING PARTS		
	S-1021Z-10-8	SCREW CESSNA STANDARD	1	
		---*---		
- 50	0742115-25	ANGLE-LANDING GEAR SUPPORT LOWER RH	1	F
	0742115-26	ANGLE-LANDING GEAR SUPPORT LOWER LH	1	F
- 51	0742116-2	REINFORCEMENT LH	1	
	0742116-3	REINFORCEMENT RH	1	
- 52	0422344	EYEBOLT	1	
		ATTACHING PARTS		
	MS20365-524C	NUT	1	
		---*---		
- 53	0720004	DRAIN INSTALLATION-FUEL TANK FILLER NECK WELL-----SEE FIGURE 96	1	D
- 54	0513003-6	BRACE ASSEMBLY	1	C
		ATTACHING PARTS		
- 55	0713156-1	DOUBLER	1	
	AN4-6A	BOLT	2	
	MS20365-428C	NUT	2	
		---*---		
- 56	0511311-11	SHIELD ASSEMBLY LH	1	C
	0511311-12	SHIELD ASSEMBLY RH	1	C
	0413235	GROMMET	1	
- 57	0742115-44	FAIRING LH	1	C
	0742115-45	FAIRING RH	1	C
- 58	0742119-1	SPRING & CABLE ASSEMBLY-FLOATPLANE	2	C
		ATTACHING PARTS		
	AN23-11	BOLT	2	
	AN310-3	NUT	2	
	AN960-10	WASHER	2	
	MS24665-134	PIN-COTTER	2	
		---*---		
- 59	0742373	STOP-COWL FLAP	2	C
- 60	0742115-37	SPLICE	2	C
- 61	0711112-5	BULKHEAD ASSEMBLY-STA. 90.0	1	C
- 62	0742117-4	DOUBLER-RH REAR	1	E
	0742117-5	DOUBLER-LH REAR	1	E
- 63	0742117-2	DOUBLER-RH FORWARD	1	E
	0742117-3	DOUBLER-LH FORWARD	1	E
- 64	0742115-18	ANGLE ASSEMBLY RH	1	
	0742115-17	ANGLE ASSEMBLY LH	1	
	0500106-176	BRAKE LINE SEE FIGURE 87	1	J
	0751001-23	MOUNT-ENGINE SEE FIGURE 76	1	J
	0751001-25	MOUNT-ENGINE SEE FIGURE 77	1	C
	0411086-14	INDICATOR-AIRSPEED WHEN EXHAUSTED USE S-1324N2	1	G
	0411086-17	INDICATOR-AIRSPEED WHEN EXHAUSTED USE S-1324N2	1	H
	0411086-23	INDICATOR-AIRSPEED-ALT-WHEN EXHAUSTED USE S-1324N2	1	H
	S-1324N2	INDICATOR-AIRSPEED	1	
- 65	0441115-3	WEDGE	4	
- 66	0741007-1	SHIM	AR	
	36837	BALLAST-BULKHEAD STA. 230.187	1	
		ATTACHING PARTS		
	AN520-10R72	SCREW	4	
	AN970-3	WASHER	4	
	MS20365-1032C	NUT	4	
		---*---		
		A---180 SERIAL 31260 & ON		
		B---180 SERIAL 31260 THRU 50661		
		C---180 SERIAL 50662 & ON		
		D---180 SERIAL 31260 THRU 50452		
		E---180 SERIAL 50106 & ON		
		F---180 SERIAL 31260 THRU 32156		
		G---180 SERIAL 31260 THRU 32661		
		H---180 SERIAL 32662 & ON		
		J---180 SERIAL 32151 THRU 50661		
		NOTE. FOR ACCESSORY KIT LISTINGS REFER PAGES 372 THRU 374B		

This page intentionally left blank.

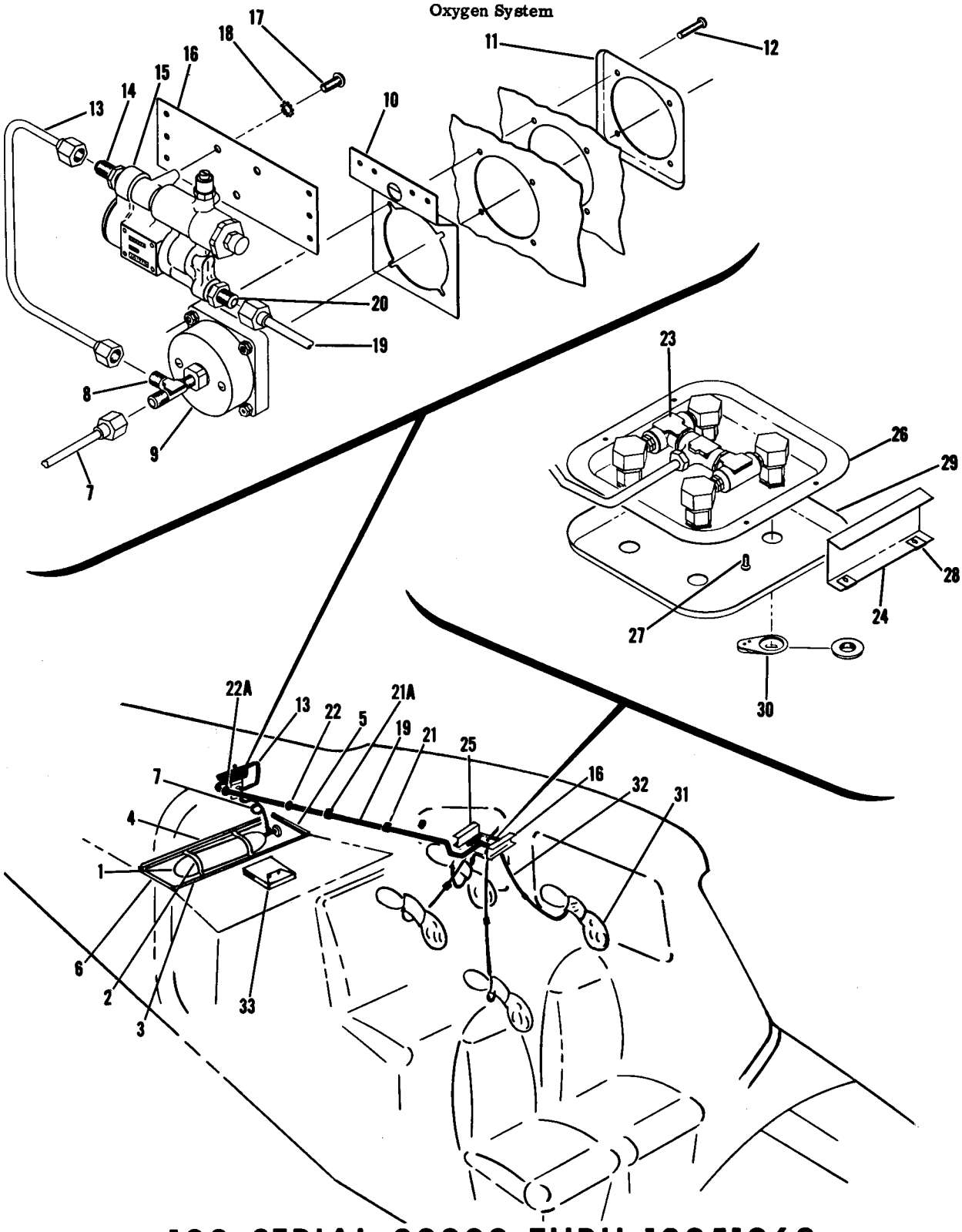

180 SERIAL 30000 THRU 18051063
182 ALL SERIALS

Figure 124. Oxygen System Installation

FIGURE AND INDEX NO.	PART NUMBER	DESCRIPTION 1 2 3 4 5 6 7	UNITS PER ASSY	USABLE ON CODE
124-		OXYGEN SYSTEM INSTALLATION	NP	
- 1	1200058-1	CYLINDER AND VALVE ASSEMBLY	1	
- 2	1200057-1	MOUNTING BRACKET-CYLINDER	2	
		ATTACHING PARTS		
	AN4-5A	BOLT	2	
	MS20365-428C	NUT	2	
		---*---		
- 3	0700030-8	ANGLE-TANK SUPPORT FORWARD	1	
- 4	0700030-9	ANGLE-TANK SUPPORT AFT	1	
- 5	0700030-1	ANGLE-TANK SUPPORT LH	1	
- 6	0700030-2	ANGLE-TANK SUPPORT RH	1	
- 7	0500106-184	TUBE H.P.-TANK TO GAGE	1	
		ATTACHING PARTS		
- 8	AN826-3D	TEE	1	
		---*---		
- 9	0812362-1	GAGE-OXYGEN PRESSURE WHEN EXHAUSTED USE S-1325N1	1	
	S-1325N1	GAGE-OXYGEN PRESSURE	1	
- 10	0700030-4	BRACKET-GAGE	1	
- 11	0700030-3	BEZEL-GAGE	1	
		ATTACHING PARTS		
- 12	AN515BR6	SCREW	4	
		---*---		
- 13	0500106-185	TUBE H.P.-GAGE TO REGULATOR	1	
		ATTACHING PARTS		
- 14	AN816-3D	NIPPLE	1	
		---*---		
- 15	0812363-1	REGULATOR-OXYGEN	1	
- 16	0700030-5	BRACKET-REGULATOR	1	
		ATTACHING PARTS		
- 17	NAS222-5	SCREW	3	
- 18	AN936-B416	WASHER	3	
		---*---		
- 19	0500106-186	TUBE L.P.- REGULATOR TO MANIFOLD	1	A
	0500106-299	TUBE L.P.-REGULATOR TO MANIFOLD	1	B
		ATTACHING PARTS		
- 20	AN816-5D	NIPPLE	1	
- 21	A2981A-5	CLAMP TIN	1	
	S-1021Z-8-6	SCREW CESSNA STANDARD	1	
	S-350	WASHER-CORK-----CESSNA STANDARD	1	
	AN960-10L	WASHER	1	
-21A	MS21919DG5	CLAMP	1	B
	NAS446-4-3	NUT	1	B
	S-1021Z-8-8	SCREW	1	B
		---*---		
- 22	MS35489-12S	GROMMET	1	A
-22A	MS35489-118S	GROMMET	1	B
- 23	0800030-2	MANIFOLD ASSEMBLY	1	
- 24	0700030-7	BRACKET-MANIFOLD SUPPORT FORWARD	1	
- 25	0700030-6	BRACKET-MANIFOLD SUPPORT AFT	1	
- 26	0800030-14	PAN-MANIFOLD SUPPORT	1	
		ATTACHING PARTS		
- 27	S-1021Z-6-6	SCREW CESSNA STANDARD	4	
- 28	A1804-6Z-3	NUT TIN	4	
		---*---		
- 29	0800030-5	COVER	1	
- 30	0812366-1	DUST COVER	4	
- 31	0812369-1	MASK-OXYGEN	4	
- 32	0800030-4	LINE ASSEMBLY-MASK	4	
- 33	0800030-19	CASE-OXYGEN MASK	1	

180 SERIAL 30000 THRU 18051063

182 ALL SERIALS

A---180 SERIAL 30000 THRU 50661
182 SERIAL 33000 THRU 52358
B---180 SERIAL 50662 THRU 18051063
182 SERIAL 52359 & ON

NOTE. FOR ACCESSORY KIT LISTINGS REFER TO PAGES 372 THRU 374B
S-NOS APPEARING ON THIS PAGE ARE CESSNA STANDARD

Oxygen System

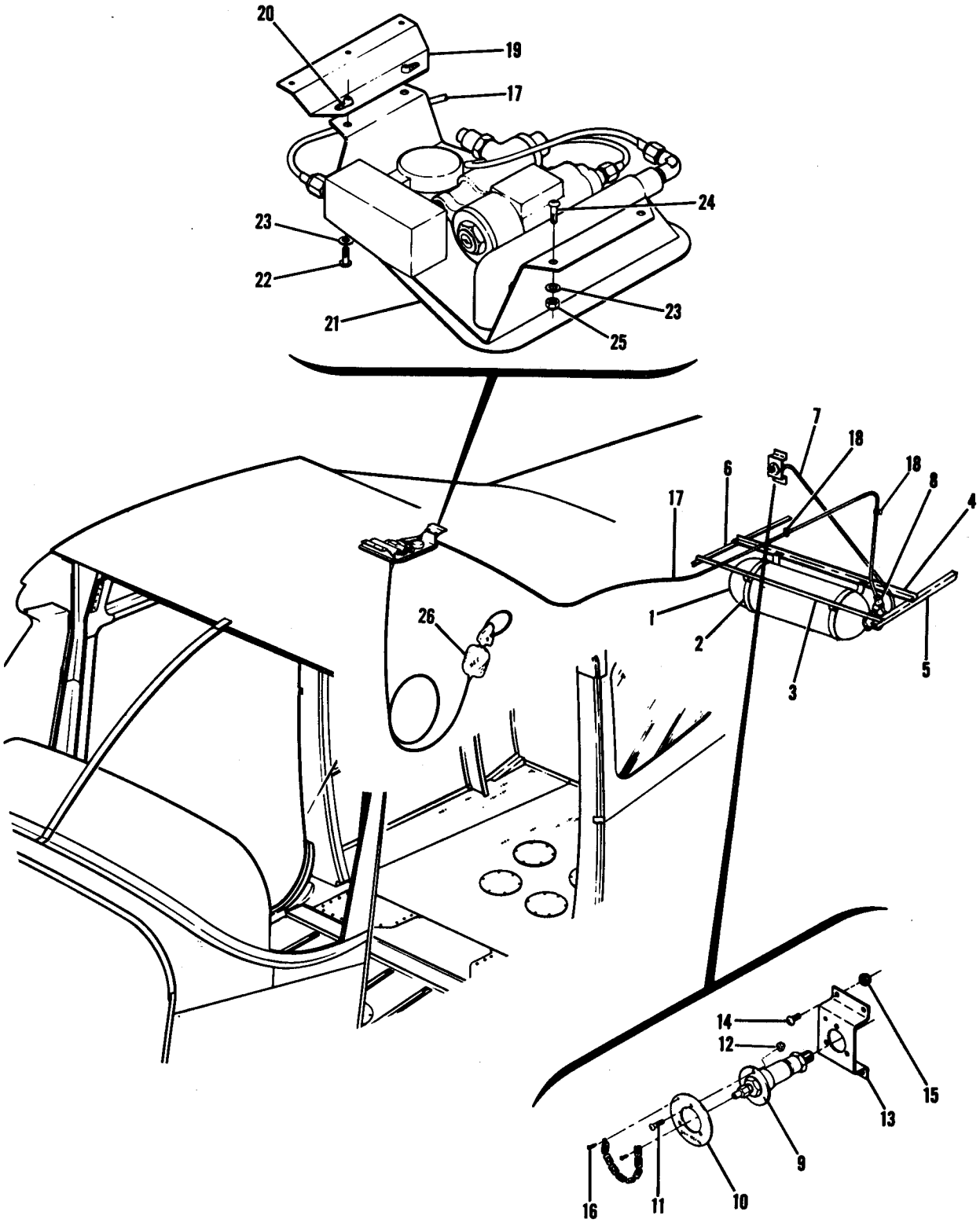

180 SERIAL 18051064 & ON

Figure 124A. Oxygen System Installation

FIGURE AND INDEX NO.	PART NUMBER	DESCRIPTION 1 2 3 4 5 6 7	UNITS PER ASSY	USABLE ON CODE
124A-		OXYGEN SYSTEM INSTALLATION	NP	A
- 1	1200058-1	CYLINDER & VALVE ASSEMBLY	1	
- 2	1200057-1	MOUNTING BRACKET-CYLINDER **180 SERIAL**	1	
		ATTACHING PARTS		
	AN4-5A	BOLT **18051064 & ON**	2	
	MS20365-428C	NUT	2	
		---*---		
- 3	0700030-8	ANGLE-TANK SUPPORT FORWARD	1	
- 4	0700030-9	ANGLE-TANK SUPPORT AFT	1	
- 5	0700030-1	ANGLE-TANK SUPPORT LH	1	
- 6	0700030-2	ANGLE-TANK SUPPORT RH	1	
- 7	0800045-24	LINE ASSEMBLY-OXYGEN	1	
- 8	0800045-15	TEE	1	
- 9	0800045-6	FILLER VALVE ASSEMBLY-OXYGEN	1	
- 10	1200054-2	RETAINER-UPHOLSTERY	1	
		ATTACHING PARTS		
- 11	NAS220-8	SCREW	3	
- 12	MS20365-832C	NUT	3	
		---*---		
- 13	0700076-1	BRACKET-FILLER VALVE SUPPORT	1	
		ATTACHING PARTS		
- 14	AN515-8R8	SCREW	4	
- 15	MS20365-832C	NUT	4	
		---*---		
- 16	S-1021Z-4-6	SCREW-FILLER CAP CHAIN CESSNA STANDARD	1	
- 17	0800045-23	LINE ASSEMBLY-OXYGEN	1	
		ATTACHING PARTS		
- 18	MS21919DG3	CLAMP	2	
	S-1021Z-8-8	SCREW	2	
	NAS446-4-3	NUT	2	
		---*---		
- 19	1200052-1	SUPPORT-AUTOMATIC OXYGEN SYSTEM ASSEMBLY	1	
- 20	NAS696A3K	NUT-ANCHOR	2	
- 21	1200055-1	OXYGEN SYSTEM ASSEMBLY-AUTOMATIC	1	
		ATTACHING PARTS		
- 22	AN520-10R7	SCREW	2	
- 23	AN960D10	WASHER	4	
- 24	NAS221C-6	SCREW	2	
- 25	MS20365-1032C	NUT	2	
		---*---		
- 26	1200059-1	MASK ASSEMBLY-OXYGEN	5	
	7	MASK-OXYGEN ZEP	1	

A---180 SERIAL 18051064 & ON

Camera

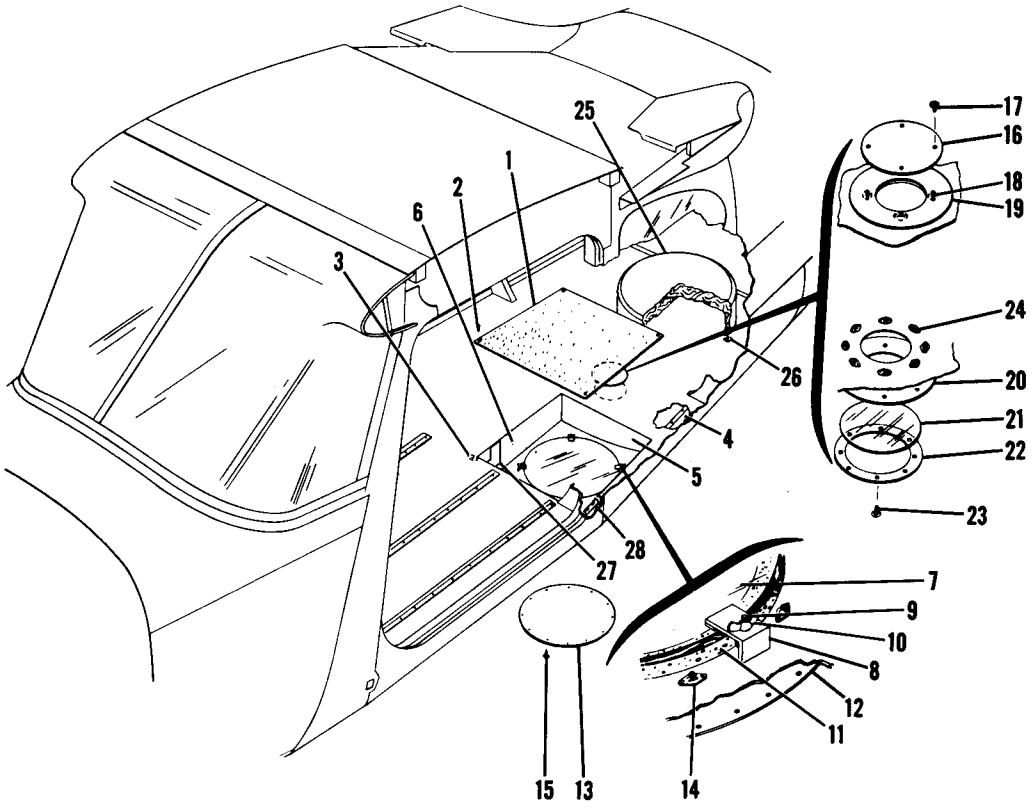

180 ALL SERIALS

Figure 125. Off-Center Camera Provision

FIGURE AND INDEX NO.	PART NUMBER	DESCRIPTION 1 2 3 4 5 6 7	UNITS PER ASSY	USABLE ON CODE
125-		OFF CENTER CAMERA PROVISIONS INSTALLATION	NP	A
- 1	0510010-18	COVER ASSEMBLY-CAMERA BAY	1	
		ATTACHING PARTS		
- 2	AN520-10R9	SCREW	4	
- 3	NAS680A3	NUT PLATE	4	
		---*---		
- 4	0510010-32	BULKHEAD ASSEMBLY-CAMERA STRUCTURE OUTBOARD	1	
- 5	0510010-3	BULKHEAD-CAMERA STRUCTURE AFT	1	
- 6	0510010-31	BULKHEAD ASSEMBLY-CAMERA STRUCTURE INBOARD	1	
- 7	0510010-11	WINDOW-CAMERA GLASS	1	
		ATTACHING PARTS		
- 8	0510010-16	CLAMP ASSEMBLY	4	
- 9	AN520-10R16	SCREW	4	
	MS20365-1032C	NUT	4	
	AN935-10	LOCKWASHER	4	
- 10	AN350-1032	WINGNUT	4	
		---*---		
- 11	0510010-12	SEAL-CAMERA CUTOUT	1	
- 12	0510010-4	DOUBLER-CAMERA CUTOUT	1	
- 13	0510010-2	COVER-CAMERA WINDOW	1	
		ATTACHING PARTS		
- 14	NAS444-4	NUTPLATE TIN A6191-8Z-3	12	
- 15	S-1021Z-8-8	SCREW CESSNA STANDARD	12	
		---*---		
- 16	0510010-30	COVER ASSEMBLY-OBSERVATION WINDOW	1	
		ATTACHING PARTS		
- 17	S-1021Z-8-8	SCREW CESSNA STANDARD	4	
- 18	NAS444-4	NUTPLATE TIN A6191-8Z-3	4	
		---*---		
- 19	0510010-15	DOUBLER-OBSERVATION WINDOW	1	
- 20	0510010-5	DOUBLER-OBSERVATION WINDOW	1	
- 21	0510010-6	PLATE-PLEXIGLAS	1	
- 22	0510010-7	RING-SUPPORT	1	
		ATTACHING PARTS		
- 23	S-1021Z-8-8	SCREW CESSNA STANDARD	8	
- 24	NAS444-4	NUTPLATE TIN A6191-8Z-3	8	
		---*---		
- 25	0510190	SEAT-CAMERA	1	
		ATTACHING PARTS		
- 26	AN520-10R9	SCREW	4	
	NAS680A3	NUTPLATE	4	
		---*---		
- 27	0510010-19	DOUBLER	1	
- 28	0510010-21	ANGLE	1	

180 ALL SERIALS

A---180 SERIAL 30000 & ON

NOTE. FOR ACCESSORY KIT LISTINGS REFER TO PAGES 372 THRU 374B

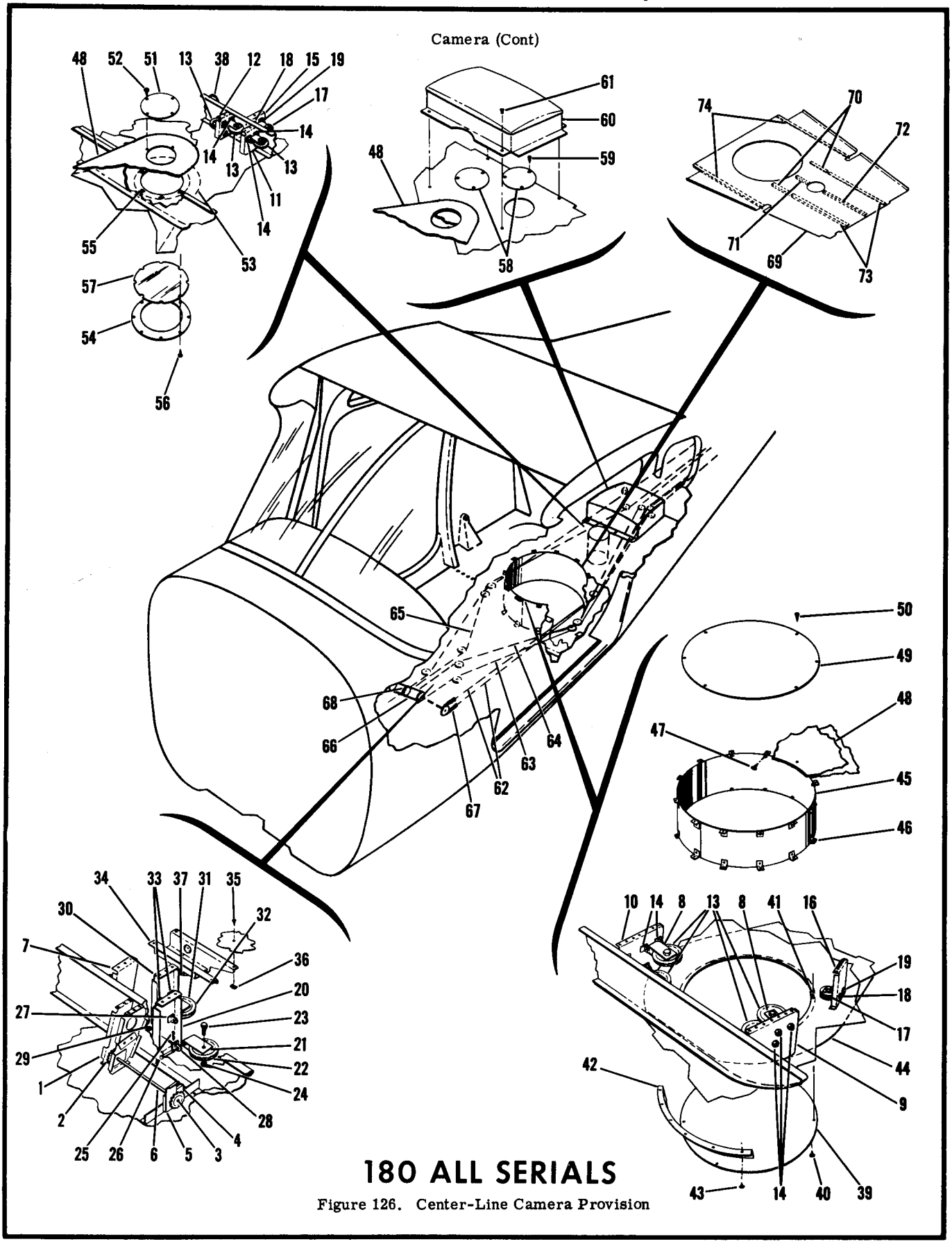

180 ALL SERIALS

Figure 126. Center-Line Camera Provision

FIGURE AND INDEX NO.	PART NUMBER	DESCRIPTION 1 2 3 4 5 6 7	UNITS PER ASSY	USABLE ON CODE
126-		CENTER LINE CAMERA PROVISIONS INSTALLATION	NP	A
- 1	0710001-23	BRACKET ASSEMBLY-SHAFT INBOARD	1	
- 2	0761210-1	SPROCKET	1	
		ATTACHING PARTS		
- 3	0761205-3	PIN	1	
		---*---		
- 4	0710001-16	BRACKET ASSEMBLY-SHAFT	1	
		ATTACHING PARTS		
	AN507-632R10	SCREW	4	
	MS20365-632C	NUT	4	
		---*---		
- 5	0710001-25	SPROCKET GUARD	1	
		ATTACHING PARTS		
	AN507-632R8	SCREW	1	
	MS20365-632C	NUT	1	
		---*---		
- 6	0710001-17	SHAFT	1	
- 7	0710001-3	BRACKET-RUDDER FORWARD RIGHT	1	
- 8	0710001-62	BRACKET-PULLEY	4	
- 9	0710001-5	BRACKET-RUDDER AND ELEVATOR LEFT	1	
- 10	0710001-6	BRACKET-RUDDER AND ELEVATOR RIGHT	1	
- 11	0710001-7	BRACKET-RUDDER AFT LEFT	1	B
	0710001-54	BRACKET-RUDDER AFT LEFT	1	C
- 12	0710001-8	BRACKET-ELEVATOR AFT	1	
- 13	MS20220-2	PULLEY	4	
		ATTACHING PARTS		
	AN5-11A	BOLT	4	
	MS20365-524C	NUT	4	
	AN960-516L	WASHER	4	
	MS24665-136	PIN-COTTER CABLE GUARD	4	
	MS20392-3-55	PIN-FLAT HEAD	4	
	MS24665-132	PIN-COTTER	4	
		---*---		
- 14	AN44-4A	BOLT-EYE	16	
		ATTACHING PARTS		
	MS20365-524C	NUT	1	
	AN960-516L	WASHER	1	
		---*---		
- 15	0710001-1	BRACKET-STABILIZER AFT	1	
- 16	0710001-10	BRACKET-STABILIZER FORWARD	1	
- 17	0710001-19	BRACKET-PULLEY	2	
	S-378-1	PULLEY-----CESSNA STANDARD	4	
		ATTACHING PARTS		
	AN3-10A	BOLT	2	
	MS20365-1032C	NUT	2	
	AN960-416	WASHER	2	
	MS24665-132	PIN-COTTER	2	
	MS24665-136	PIN-COTTER CABLE GUARD	2	
	MS20392-3-47	PIN-FLAT HEAD	2	
		---*---		
- 18	AN44-4A	BOLT-EYE	2	
- 19	0710001-46	BOLT-EYE	2	
		ATTACHING PARTS		
	MS20365-524C	NUT	1	
	AN960-516L	WASHER	1	
		---*---		
- 20	0710001-2	BRACKET-RUDDER FORWARD LEFT	1	

180 ALL SERIALS

CONTINUED ON PAGES 338 & 339

FIGURE AND INDEX NO.	PART NUMBER	DESCRIPTION 1 2 3 4 5 6 7	UNITS PER ASSY	USABLE ON CODE
126- 21	0710001-62	BRACKET-PULLEY	1	
- 22	MS20220-2	PULLEY	1	
		ATTACHING PARTS		
- 23	AN5-11A	BOLT	1	
- 24	MS20365-524C	NUT	1	
	AN960-516L	WASHER	1	
	MS24665-132	PIN-COTTER	1	
- 25	MS24665-136	PIN-COTTER CABLE GUARD	1	
- 26	MS20392-3-55	PIN-FLAT HEAD	1	
		---*---		
- 27	AN44-4A	BOLT-EYE	1	
- 28	0710001-46	BOLT-EYE	1	
		ATTACHING PARTS		
- 29	MS20365-524C	NUT	1	
	AN960-516L	WASHER	1	
		---*---		
- 30	0710001-4	BRACKET-ELEVATOR FORWARD LOWER	1	
- 31	0710001-20	BRACKET-PULLEY	1	
- 32	S-378-3	PULLEY-----CESSNA STANDARD	1	
		ATTACHING PARTS		
	AN4-7A	BOLT	1	
	MS20365-428C	NUT	1	
	AN960-416	WASHER	1	
	MS24665-132	PIN-COTTER	1	
	MS24665-136	PIN-COTTER CABLE GUARD	1	
	MS20392-3-55	PIN-FLATHEAD	1	
		---*---		
- 33	0710001-46	BOLT-EYE	2	
		ATTACHING PARTS		
	MS20365-524C	NUT	1	
	AN960-516L	WASHER	1	
		---*---		
- 34	0710001-26	BRACKET ASSEMBLY-ELEVATOR FORWARD UP CABLE	1	
		ATTACHING PARTS		
- 35	AN515-8R9	SCREW	4	
- 36	MS20365-832C	NUT	4	
		---*---		
	0710001-26	BRACKET-FAIRLEAD	1	
- 37	S-378-3	PULLEY-----CESSNA STANDARD	1	D
	MS20220-2	PULLEY	1	E
		ATTACHING PARTS		
	AN4-10A	BOLT	1	D
	AN5-11A	BOLT	1	E
	MS20365-428C	NUT	1	D
	MS20365-524C	NUT	1	E
	AN960D416L	WASHER	1	D
	AN960D516L	WASHER	1	E
	MS24665-136	PIN-COTTER	1	E
		---*---		
- 38	S-378-3	PULLEY-----CESSNA STANDARD	1	
		ATTACHING PARTS		
	AN4-10A	BOLT	1	
	MS20365-428C	NUT	1	
		---*---		
- 39	0710001-14	COVER PLATE-FUSELAGE	1	
		ATTACHING PARTS		
- 40	S-1021Z-8-8	SCREW CESSNA STANDARD	8	
- 41	NAS444-4	NUTPLATE TIN A6191-8Z-3	8	
		---*---		
- 42	0710001-42	DEFLECTOR-GAS	1	
		ATTACHING PARTS		
- 43	S-1021Z-8-8	SCREW CESSNA STANDARD	6	
	NAS444-4	NUTPLATE TIN A6191-8Z-3	6	
		---*---		
- 44	0710001-13	DOUBLER-FUSELAGE	1	
		ATTACHING PARTS		
- 45	0710001-15	BULKHEAD-CIRCULAR	1	

CONTINUED ON PAGE 339

FIGURE AND INDEX NO.	PART NUMBER	DESCRIPTION 1 2 3 4 5 6 7	UNITS PER ASSY	USABLE ON CODE
126- 46	0710001-45	ANGLE ASSEMBLY	24	
	MS20365F832C	NUTPLATE	1	
- 47	NAS220-8	SCREW	24	
		---*---		
- 48	0710001-12	DOUBLER-FLOORBOARD	1	
- 49	0710001-11	COVER PLATE-FLOORBOARD	1	
		ATTACHING PARTS		
	NAS680A3	NUT	4	
- 50	AN520-10R9	SCREW	4	
		---*---		
- 51	0710001-34	COVER PLATE-VIEW FINDER FLOORBOARD	1	
		ATTACHING PARTS		
	AN366-632	NUT	4	
- 52	AN515-6R5	SCREW	4	
		---*---		
- 53	0710001-30	DOUBLER-VIEW FINDER LOWER	1	
- 54	0710001-31	RING-RETAINER	1	
		ATTACHING PARTS		
- 55	NAS444-4	NUT TIN A6191-8Z-3	8	
- 56	S-1021Z-8-8	SCREW CESSNA STANDARD	8	
		---*---		
- 57	0710001-32	WINDOW-VIEW FINDER PLEXIGLAS	1	
- 58	S-225-1	PLATE-INSPECTION COVER CESSNA STANDARD	2	
		ATTACHING PARTS		
- 59	49330	STUD-TRI-MOUNT UC	3	
		---*---		
- 60	0710001-36	SEAT ASSEMBLY-CAMERA	1	
		ATTACHING PARTS		
- 61	AN520-10R9	SCREW	4	
	NAS680A3	NUTPLATE	4	
		---*---		
- 62	0510105-28	CABLE-STABILIZER TRIM	2	
- 63	0510105-33	CABLE-RUDDER	2	B
	0510105-67	CABLE-RUDDER LEFT	1	C
	0510105-68	CABLE-RUDDER RIGHT	1	C
- 64	0510105-32	CABLE-ELEVATOR LOWER	1	
- 65	0510105-31	CABLE-ELEVATOR UPPER	1	
- 66	0432138-5	CHAIN-STABILIZER	1	
- 67	0432138-4	CHAIN-STABILIZER	1	
- 68	0432134-4	SPROCKET-IDLER	1	
		ATTACHING PARTS		
	AN3-62A	BOLT	1	
	NAS43-3-256	SPACER	1	
	NAS43-3-92	SPACER	1	
	MS20365-1032C	NUT	1	
		---*---		
- 69	0710001-49	FLOORBOARD ASSEMBLY	1	
- 70	0710001-50	STIFFENER	2	
- 71	0710001-51	STIFFENER	1	
- 72	0710001-52	STIFFENER	1	
- 73	0512107-30	STIFFENER	2	
- 74	0512107-12	STIFFENER	2	

A---180 SERIAL 30000 & ON
B---180 SERIAL 30000 THRU 32150
C---180 SERIAL 32151 & ON
D---180 SERIAL 30000 THRU 18051020
E---180 SERIAL 18051021 & ON
NOTE. FOR ACCESSORY KIT LISTINGS REFER TO PAGES 372 THRU 374B

Nameplates and Placards

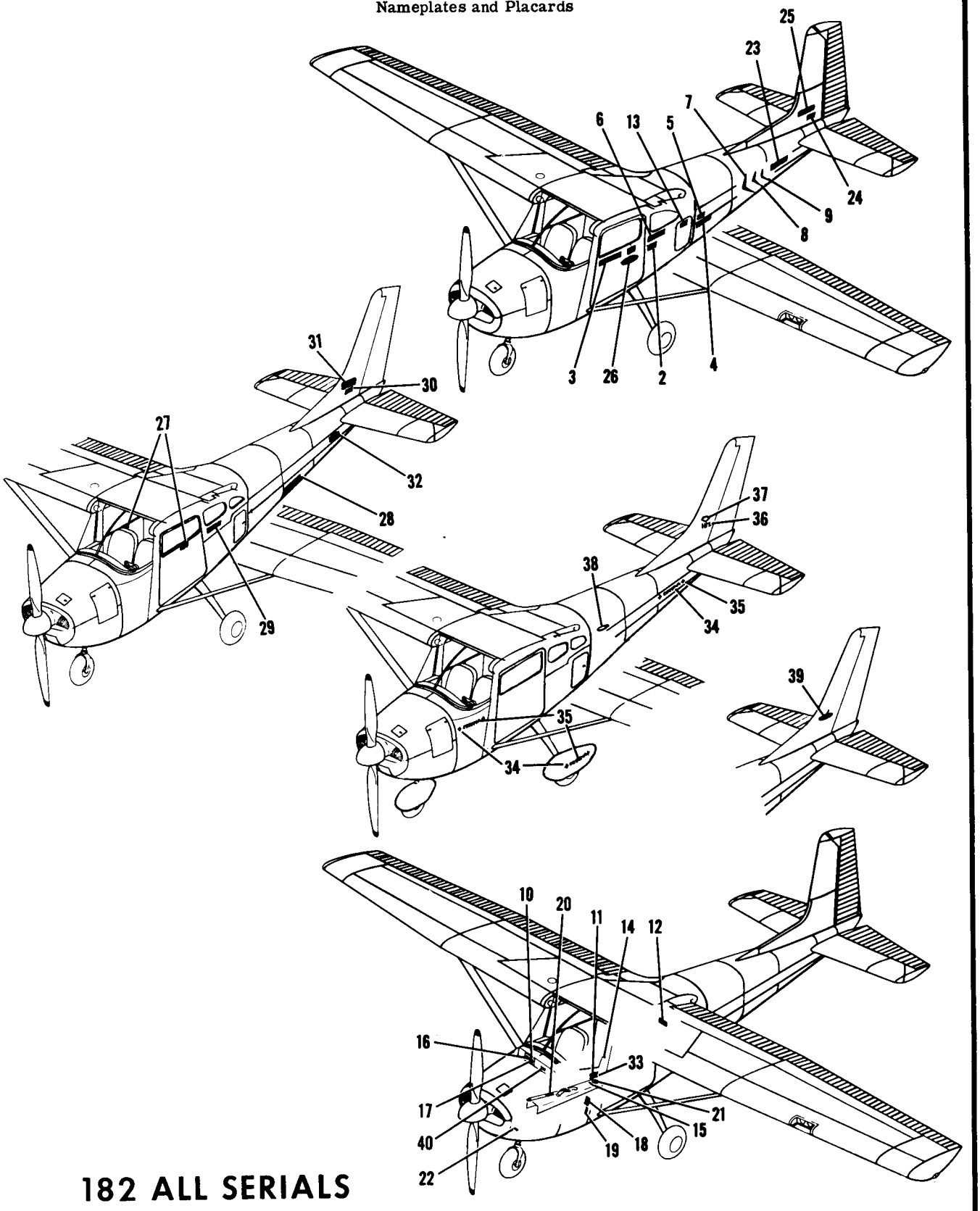

182 ALL SERIALS

Figure 127. Nameplates, Placards, Stencils, & Exterior Markings

FIGURE AND INDEX NO.	PART NUMBER	DESCRIPTION 1 2 3 4 5 6 7	UNITS PER ASSY	USABLE ON CODE
127-		NAMEPLATES, PLACARDS, STENCILS & EXTERIOR MARKINGS	NP	G
- 1		DELETED, NEVER USED		
- 2	0700015	NAMEPLATE	2	B
- 3	0500027-8	NAMEPLATE CESSNA 182 — 182 ALL	2	B
- 4	0500027-9	PLACARD 182 — SERIALS	2	D
- 5	0700015	NAMEPLATE	2	D
- 6	0500027-4	STENCIL CESSNA	2	D
- 7	0700026-1	PLACARD	2	D
- 8	0700026-2	PLACARD	2	D
- 9	0700026-3	PLACARD	2	D
- 10	0713058	PLACARD-OPERATIONAL LIMITATIONS	1	E
- 11	0713073	PLACARD-OPERATIONAL LIMITATIONS	1	D
	0713207-1	PLACARD-OPERATIONAL LIMITATIONS	1	F
- 12	0512120-1	PLACARD-BAGGAGE LOAD LIMITS	1	M
- 13	0710032-3	PLACARD-BAGGAGE LOAD LIMITS	1	
- 14	0713210-4	PLACARD-MAP LIGHT	1	
- 15	0511168	PLACARD-FUEL SELECTOR-----BOTH TANKS ON	1	
- 16	0713210-9	PLACARD-TIRE & OIL PRESSURE	1	
- 17	0713213	NAMEPLATE	1	D
- 18	S-1112-1	NAMEPLATE M.A.A. CESSNA STANDARD	1	
- 19	0713047	PLACARD-FINISH & TRIM	1	
- 20	0510191	PLACARD-FLAP INSTRUCTIONS	1	
- 21	0716167	PLACARD-FUEL SELECTION	1	
- 22	0513022	PLACARD-DRAIN VALVE	1	H
- 23	0500027-4	STENCIL CESSNA	2	J
- 24	0700029-1	PLACARD	2	K
- 25	0500027-9	STENCIL 182	2	K
- 26	0700020-1	NAMEPLATE SKYLANE	2	L
- 27	0711026-1	STRIKER PLATE-DECORATIVE SKYLANE ONLY	2	N
- 28	0500027-4	STENCIL CESSNA	2	O
- 29	0500027-4	STENCIL CESSNA	2	P
- 30	0700029-4	PLACARD	2	O
- 31	0500027-9	STENCIL 182	2	O
- 32	0700020-1	NAMEPLATE SKYLANE	2	P
- 33	0700319-13	PLACARD-WINTERIZATION	1	
- 34	0500085-1	NAMEPLATE-CESSNA	4	Q
	0500085-1	NAMEPLATE-CESSNA	2	R
- 35	0500085-2	PLACARD-STAR	8	Q
	0500085-2	PLACARD-STAR	4	R
- 36	0500091-6	PLACARD-182	2	Q
- 37	0700053-1	PLACARD	2	Q
- 38	0700020-2	PLACARD-SKYLANE	2	R
- 39	0700054-1	PLACARD-SKYLANE TAIL LH	1	R
	0700054-2	PLACARD-SKYLANE TAIL RH	1	R
- 40	0713222-1	PLACARD-OIL DILUTION	1	Q

A---182 SERIAL 33000 THRU 34753
B---182 SERIAL 33000 THRU 33842
D---182 SERIAL 34754 THRU 51556
E---182 SERIAL 33000 THRU 33842
F---182 SERIAL 51557 & ON
G---182 SERIAL 33000 & ON
H---182 SERIAL 33000 THRU 33842
K---182 SERIAL 51557 THRU 52358
L---182 SKYLANE SERIAL 51557 THRU 52358
M---182 SERIAL 33000 THRU 52358
N---182 SERIAL 34754 & ON
O---182 SERIAL 52359 THRU 53007
P---182 SKYLANE SERIAL 52359 THRU 53007
Q---182 SERIAL 18053008 & ON
R---182 SKYLANE SERIAL 18253008 & ON

Nameplates and Placards

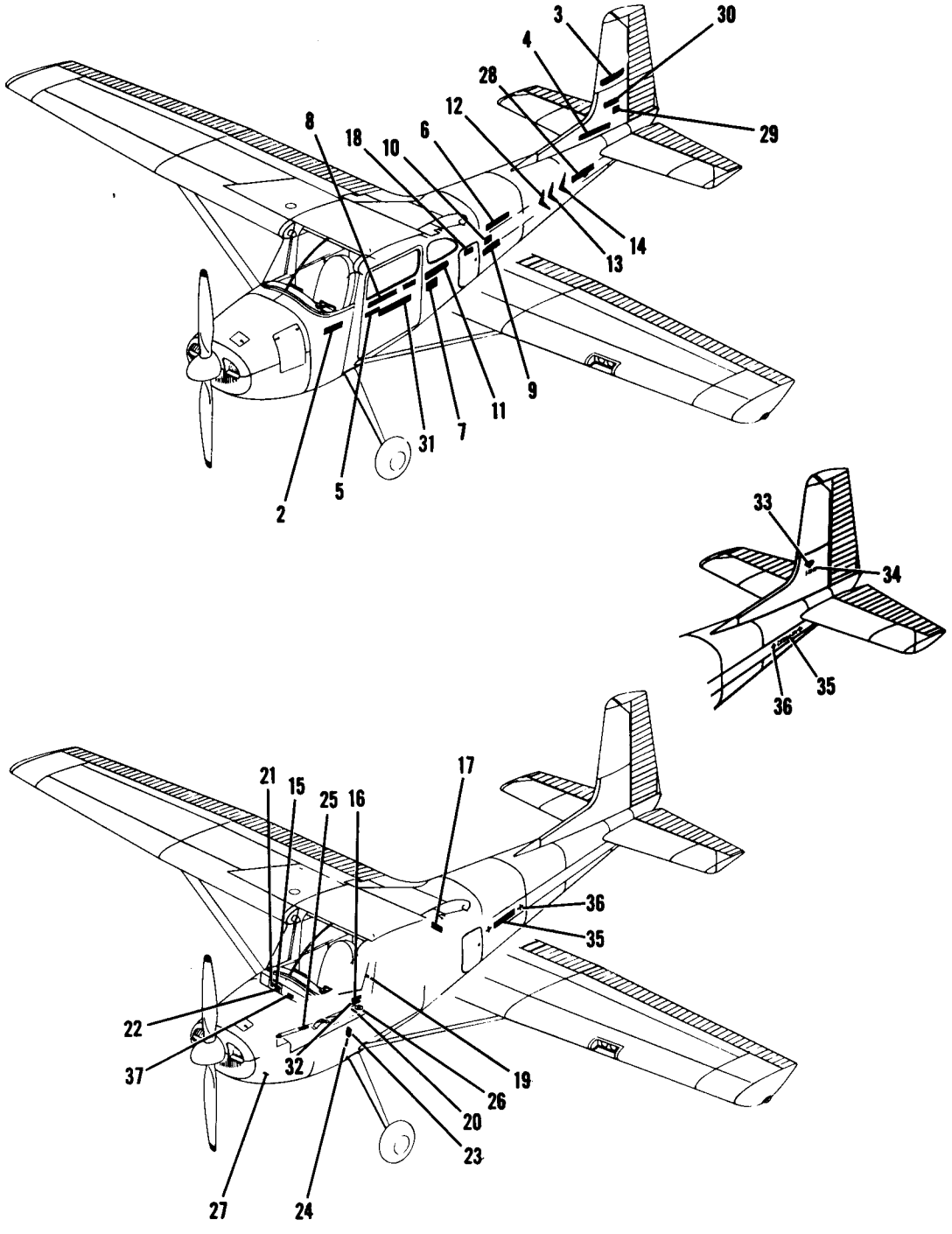

180 ALL SERIALS

Figure 128. Nameplates, Placards, Stencils, and Exterior Markings

FIGURE AND INDEX NO.	PART NUMBER	DESCRIPTION 1 2 3 4 5 6 7	UNITS PER ASSY	USABLE ON CODE
128-		NAMEPLATES, PLACARDS, STENCILS, & EXTERIOR MARKINGS	NP	P
- 1		DELETED, NEVER USED		
- 2	0700009-1	STENCIL 180	2	B
- 3	0700009-2	STENCIL CESSNA 180	2	B
	0700013	STENCIL BIRD	2	D
	0700013-1	STENCIL BIRD	2	E
- 4	0700012	STENCIL CESSNA	2	C
- 5	0750291	STENCIL ONE EIGHTY	2	C
	0700011	STENCIL ONE EIGHTY	2	D
- 6	0700012	STENCIL CESSNA	2	D
- 7	0700015	NAMEPLATE	2	E
- 8	0500027-3	NAMEPLATE CESSNA 180	2	A
- 9	0500027-7	PLACARD 180	2	G
- 10	0700015	NAMEPLATE	2	G
- 11	0500027-4	STENCIL CESSNA	2	G
- 12	0700026-1	PLACARD	2	G
- 13	0700026-2	PLACARD	2	G
- 14	0700026-3	PLACARD	2	G
- 15	0713210-3	PLACARD-OPERATIONAL LIMITATIONS	1	H
- 16	0713210-6	PLACARD-OPERATIONAL LIMITATIONS	1	E
	0713207-2	PLACARD-OPERATIONAL LIMITATIONS	1	G
	0713207-1	PLACARD-OPERATIONAL LIMITATIONS	1	T
- 17	0512120	PLACARD-BAGGAGE LOAD LIMITS	1	H
	0512120-1	PLACARD-BAGGAGE LOAD LIMITS	1	K
- 18	0710032-3	PLACARD-BAGGAGE LOAD LIMITS	1	L
	0512166-3	PLACARD-BAGGAGE & OR AUXILIARY PASSENGER	1	S
- 19	0713210-4	PLACARD-MAP LIGHT	1	
- 20	0511168	PLACARD-FUEL SELECTOR-----BOTH TANKS ON	1	
- 21	0713210-2	PLACARD-TIRE & OIL PRESSURE	1	H
	0713210-7	PLACARD-TIRE & OIL PRESSURE	1	K
- 22	0713213	NAMEPLATE	1	
- 23	S-1112-1	NAMEPLATE M.A.A. CESSNA STANDARD	1	
- 24	0713047	PLACARD-FINISH & TRIM	1	
- 25	0510191	PLACARD-FLAP INSTRUCTIONS	1	
- 26	0716167	PLACARD-FUEL SELECTION	1	
- 27	0513022	PLACARD-DRAIN VALVE	1	M
- 28	0500027-4	STENCIL CESSNA	2	J
- 29	0700029-1	PLACARD	2	J
- 30	0500027-7	STENCIL 180	2	J
- 31	0500027-4	STENCIL CESSNA	2	N
- 32	0700319-13	PLACARD-WINTERIZATION	1	
- 33	0700053-1	PLACARD-TAIL	2	R
- 34	0500091-5	PLACARD-180	2	R
- 35	0500085-1	NAMEPLATE-CESSNA	2	R
- 36	0500085-2	PLACARD-STAR	4	R
- 37	0713222-1	PLACARD-OIL DILUTION	1	R

180 ALL SERIALS

A---180 SERIAL 32151 THRU 50105
B---180 SERIAL 30000 THRU 30639
C---180 SERIAL 30640 THRU 31259
D---180 SERIAL 31260 THRU 32150
E---180 SERIAL 32151 THRU 32661
G---180 SERIAL 32662 THRU 50355
H---180 SERIAL 30000 THRU 32150
J---180 SERIAL 50356 THRU 50661
K---180 SERIAL 32151 & ON
L---180 SERIAL 30640 THRU 18051063
M---180 SERIAL 30000 THRU 50355
N---180 SERIAL 50662 THRU 50911
P---180 SERIAL 30000 & ON
Q---180 SERIAL 30000 THRU 50355
R---180 SERIAL 18050912 & ON
S---180 SERIAL 18051064 & ON
T---180 SERIAL 50356 & ON

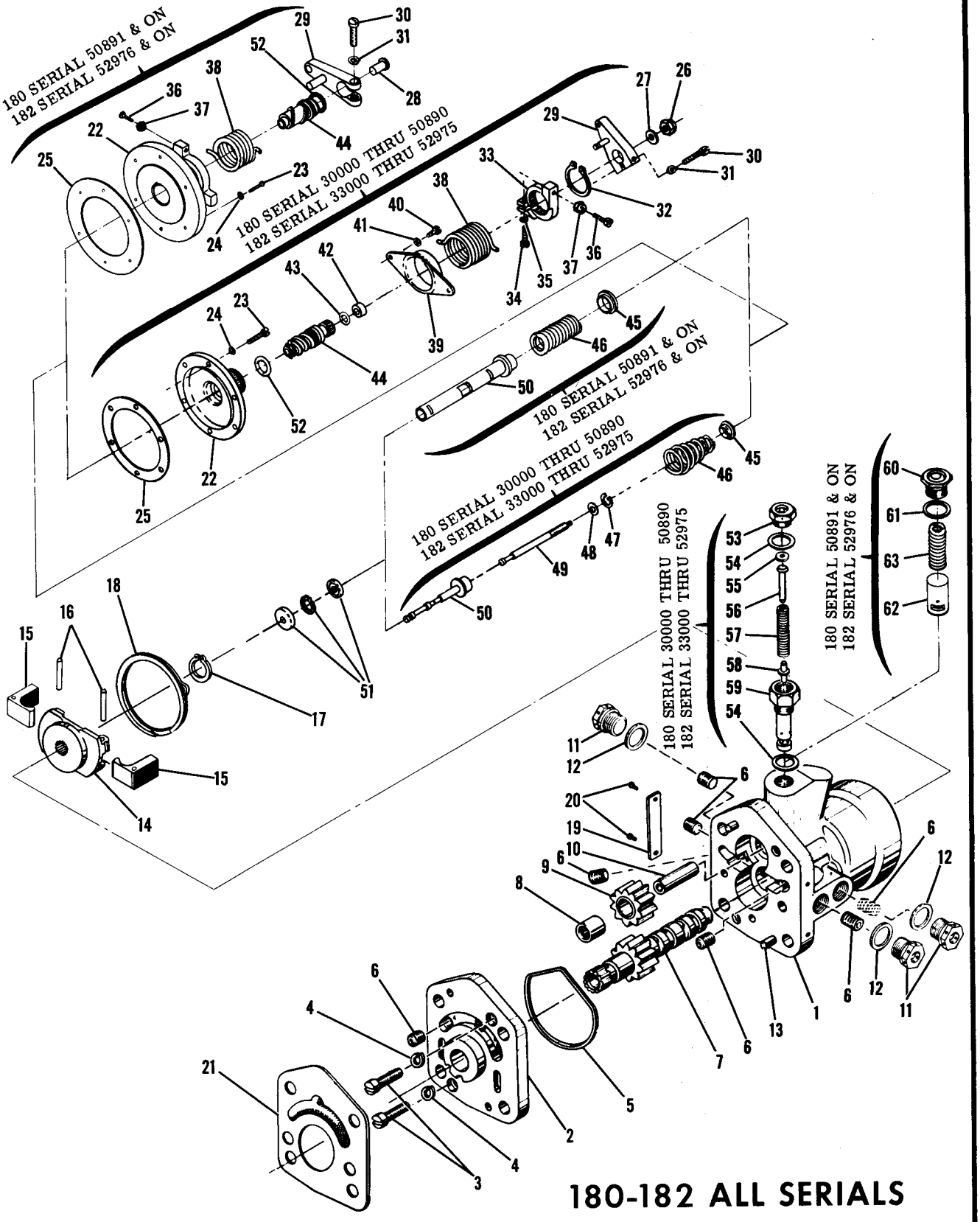

Figure 128A. Propeller Governor Assembly

FIGURE AND INDEX NO.	PART NUMBER		DESCRIPTION 1 2 3 4 5 6 7	UNITS PER ASSY	USABLE ON CODE
128A-			GOVERNOR ASSEMBLY-PROPELLER	NP	A
	0750101-61		GOVERNOR ASSEMBLY-PROPELLER ----USE WITH MCCAULEY PROPELLER	1	B
	0750101-62		GOVERNOR ASSEMBLY-PROPELLER ----USE WITH HARTZELL PROPELLER	1	B
- 1	210109		BODY-GOVERNOR WGV	1	A
	210253		BODY-GOVERNOR WGV	1	B
- 2	210022		BASE-GOVERNOR WGV	1	A
	210259		BASE-GOVERNOR WGV	1	B
			ATTACHING PARTS		
- 3	218036		SCREW WGV	2	
- 4	AN935-10		WASHER	2	
- 5	206336		O RING-----WGV	1	
			---*---		
- 6	190734		PLUG-PIPE WGV	6	
- 7	204865		GEAR-PUMP DRIVE WGV	1	A
	210206		GEAR-PUMP DRIVE WGV	1	B
- 8	210036		BEARING-NEEDLE WGV	1	
- 9	204864		GEAR-PUMP IDLER WGV	1	
- 10	210031		STUD-IDLER GEAR WGV	1	
- 11	210095		PLUG-SCREW THREAD WGV	3	
- 12	190733		WASHER-----WGV	3	
- 13	184793		PIN-DOWEL WGV	2	
- 14	210111		HEAD-FLYWEIGHT WGV	1	A
	210207		HEAD-FLYWEIGHT WGV	1	B
- 15	196000		BALLARM WGV	1	A
	210289		FLYWEIGHT WGV	1	B
- 16	210112		PIN-FLYWEIGHT WGV	2	
- 17	190094		RING-RETAINING WGV	1	
- 18	192103		RING-SPIROLOX RETAINING WGV	1	
- 19	193385		NAMEPLATE WGV	1	
			ATTACHING PARTS		
- 20	AN535-0-2		SCREW	2	
			---*---		
- 21	MS100009		GASKET-MOUNTING	1	
- 22	210023		COVER-GOVERNOR WGV	1	A
	210272		COVER-GOVERNOR WGV	1	B
			ATTACHING PARTS		
- 23	AN503-8-10		SCREW	4	
- 24	AN935-8L		WASHER	4	
- 25	206337		GASKET-COVER WGV	1	
			---*---		
- 26	189522		NUT WGV	1	A
- 27	186283		WASHER-----WGV	1	A
- 28	210293		PLUG-SPEED ADJUSTMENT-----WGV	1	B
- 29	210039		LEVER ASSEMBLY-SPEED ADJUSTMENT WGV	1	
- 30	188434		SCREW WGV	1	
- 31	AN935-10		WASHER	1	
- 32	189880		RING-RETAINING WGV	1	A
- 33	400433		RING-STOP WGV	1	A
- 34	190189		SCREW WGV	1	A
- 35	AN935-8L		WASHER	1	A
- 36	190576		SCREW WGV	1	
- 37	188036		NUT WGV	1	A
	188302		NUT WGV	1	B
- 38	191869		SPRING-LEVER CONTROL WGV	1	
- 39	210035		RETAINER-SPRING WGV	1	A
			ATTACHING PARTS		
- 40	AN503-8-10		SCREW	2	A
- 41	AN935-8L		WASHER	2	A
			---*---		
- 42	210034		BUSHING-LIFT ROD-----WGV	1	A
- 43	182194		O RING-----WGV	1	A
- 44	210100		SHAFT & WORM ASSEMBLY-SPEED ADJUSTMENT WGV	1	
- 45	210101		SEAT-SPEEDER SPRING WGV	1	A
	210214		SEAT-SPEEDER SPRING WGV	1	B
- 46	192315		SPRING-SPEEDER WGV	1	A
	192528		SPRING-SPEEDER WGV	1	B
- 47	189798		RING-RETAINING WGV	1	A
- 48	210025		WASHER-PILOT VALVE LIFT WGV	1	A
- 49	210044		ROD-PILOT VALVE LIFT WGV	1	A
- 50	210119		PLUNGER ASSEMBLY-PILOT VALVE WGV	1	A
	210268	*	PLUNGER ASSEMBLY-PILOT VALVE WGV	1	B
	210269	**	PLUNGER ASSEMBLY-PILOT VALVE WGV	1	B

180-182 ALL SERIALS

CONTINUED ON PAGE 343C

FIGURE AND INDEX NO.	PART NUMBER	DESCRIPTION 1 2 3 4 5 6 7	UNITS PER ASSY	USABLE ON CODE
128A- 51	180004	BEARING-PILOT VALVE WGV	1	A
	180231	BEARING-PILOT VALVE WGV	1	B
- 52	182684	O RING-----WGV	1	
	210067	VALVE ASSEMBLY-RELIEF-----WGV	1	A
- 53	210076	CAP-RELIEF VALVE WGV	1	A
- 54	186320	GASKET WGV	2	A
- 55	186321	SHIM-----4 MAXIMUM WGV	AR	A
- 56	210077	PIN-STOP WGV	1	A
- 57	210068	SPRING-RELIEF VALVE-----WGV	1	A
- 58	210078	PLUNGER-RELIEF VALVE WGV	1	A
- 59	210071	BODY-RELIEF VALVE WGV	1	A
- 60	218446	PLUG-RELIEF VALVE WGV	1	B
- 61	186320	GASKET-----WGV	1	B
- 62	210257	PLUNGER-RELIEF VALVE WGV	1	B
- 63	192558	SPRING-RELIEF VALVE WGV	1	B

A---180 SERIAL 30000 THRU 50899
182 SERIAL 33000 THRU 52994
B---180 SERIAL 50900 & ON
182 SERIAL 52995 & ON
*NOTE. USED ON 0750101-62 GOVERNOR ASSY ONLY
**NOTE. USED ON 0750101-61 GOVERNOR ASSY ONLY

This page intentionally left blank.

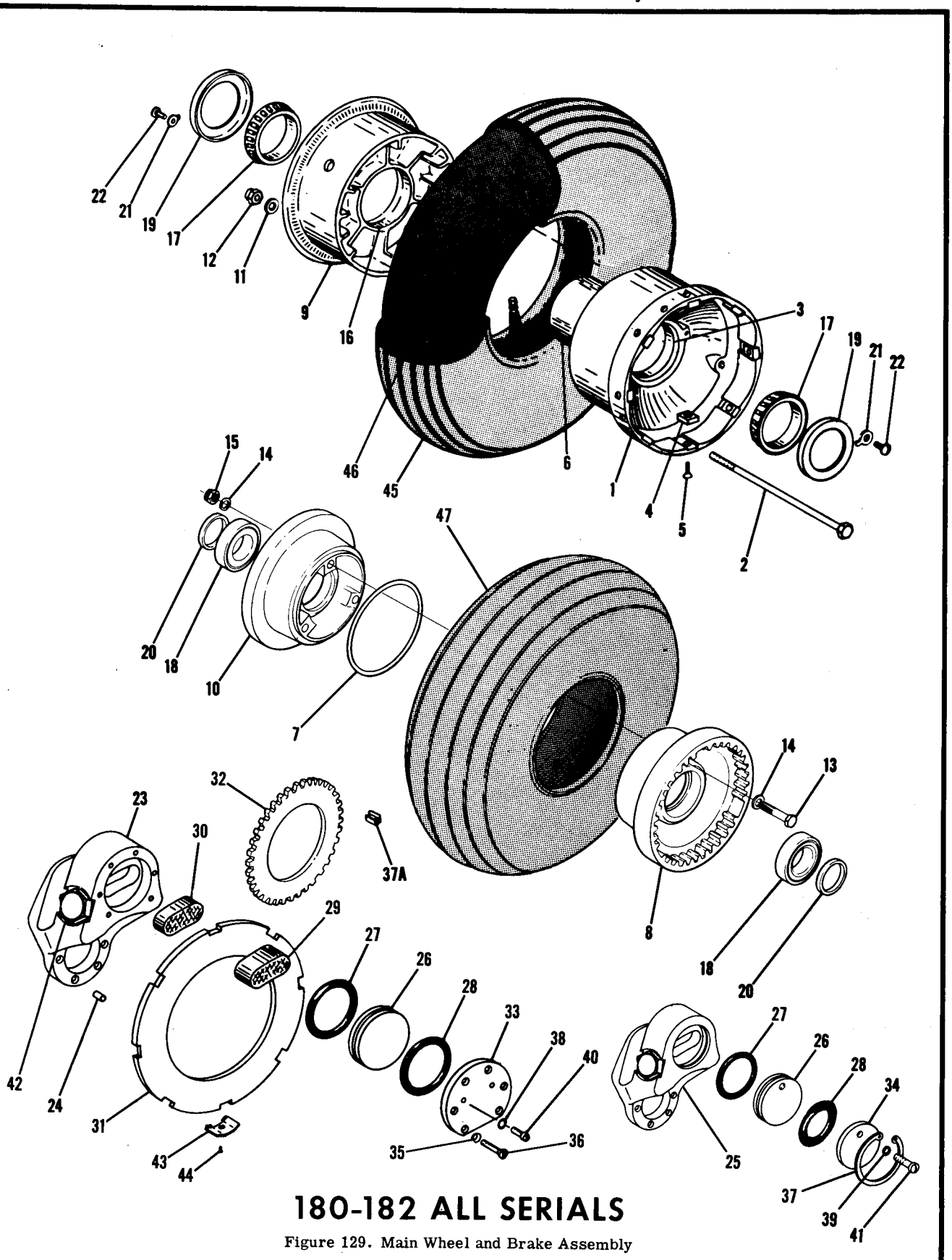

180-182 ALL SERIALS

Figure 129. Main Wheel and Brake Assembly

FIGURE AND INDEX NO.	PART NUMBER		DESCRIPTION 1 2 3 4 5 6 7	UNITS PER ASSY	USABLE ON CODE
129-			WHEEL & BRAKE ASSEMBLY-MAIN LANDING GEAR	NP	
	0441016-1		WHEEL ASSEMBLY-MAIN LANDING GEAR GY95-3472	1	A
	0541160-13	##	WHEEL ASSEMBLY-MAINLANDING GEAR GY9532673	1	D
- 1	95-3474		WHEEL SUBASSEMBLY-INBOARD HALF GY	1	A
- 2	AN4-47A		BOLT GY	3	
- 3	95-0477		CUP-BEARING GY	1	
- 4	9520101		KEY-DISC DRIVE GY	8	
			ATTACHING PARTS		
- 5	9520657		SCREW-DISC DRIVE KEY GY	1	
			---*---		
- 6	9521698		SPACER-HUB GY	1	A
- 7	AN6230B28		O RING	1	D
- 8	9524201		WHEEL SUB ASSEMBLY-INBOARD HALF GY	1	D
- 9	95-2313		WHEEL SUBASSEMBLY-OUTBOARD HALF GY	1	A
- 10	9524202	##	WHEEL SUBASSEMBLY-OUTBOARD HALF GY	1	D
			ATTACHING PARTS		
- 11	95-5219		WASHER GY	3	A
- 12	95-1567		NUT GY	3	A
- 13	AN4-13A		BOLT	3	D
- 14	AN960-416		WASHER	6	D
- 15	22-FH-428		NUT SPS	3	D
			---*---		
- 16	95-0477		CUP-BEARING GY	1	A
- 17	95-0476		CONE-BEARING GY	2	A
- 18	13889		CONE-BEARING TIMKEN	2	D
	13830	¤	CUP-BEARING TIMKEN	1	D
- 19	95-1043		RING-BEARING RETAINER GY	2	A
- 20	9524218		SEAL-BEARING GY	2	D
- 21	95-2243		TERMINAL-LOCKING GY	4	A
			ATTACHING PARTS		
- 22	95-2244		SCREW GY	1	
			---*---		
	0541103-52		BRAKE ASSEMBLY	1	A
	0541161-3		BRAKE ASSEMBLY	1	D
- 23	0541103-50		HOUSING-BRAKE	1	A
- 24	9521184		BUSHING-----GY	3	
- 25	9541458	##	HOUSING-BRAKE GY	1	D
	9521184		BUSHING GY	1	D
- 26	9510155		PISTON GY	1	A
	9524223		PISTON GY	1	D
- 27	95-4802		O RING GY	1	A
	AN6230B2		O RING	1	D
- 28	95-4803		O RING GY	1	A
	AN6230B3		O RING	1	D
- 29	95-25412		LINING-PISTON GY	1	
- 30	95-25413		LINING-PISTON GY	1	
- 31	9530287		DISC-BRAKE GY	1	A
- 32	9532129		DISC-BRAKE GY	1	D
- 33	9510731		CYLINDER HEAD GY	1	A
- 34	9524209		CYLINDER HEAD GY	1	E
	9524343	**	CYLINDER HEAD GY	1	F
			ATTACHING PARTS		
- 35	95-4909		WASHER GY	6	A
	AN960-10L		WASHER	6	E
- 36	95-5163		SCREW GY	6	A
	95-7126		BOLT-----GY	6	E
- 37	NAS669-212	**	RING-SNAP	1	F
			---*---		
-37A	9524463		CLIP-BRAKE GY	3	G
	95-25059		CLIP-BRAKE DISC CANTILEVER TYPE	3	H
- 38	9510957		SEAL-BLEEDER GY	2	A
- 39	511846-4	**	SEAL-BLEEDER	1	D
- 40	AN505-8R5		SCREW	2	A
- 41	AN502-10-6	**	SCREW	1	D
- 42	9520448		PLUG-DRAIN GY	1	
	95-5761		GASKET-DRAIN GY	2	A
	AN6290-4		GASKET-DRAIN	1	D
- 43	9523482		CLIP-DISC-----GY	4	A
			ATTACHING PARTS		
- 44	95-5383		STUD-----GY	1	
			---*---		
- 45	0441016-12		TIRE-6.00X6 4 PLY	1	B
	0441016-24		TIRE-6.00X6 6 PLY	1	C

CONTINUED ON PAGE 346

180-182 ALL SERIALS

FIGURE AND INDEX NO.	PART NUMBER	DESCRIPTION 1 2 3 4 5 6 7	UNITS PER ASSY	USABLE ON CODE
129- 46	0441016-13	TUBE-6.00X6	1	A
- 47	S-1345-4	TIRE-TUBELESS 6.00X6 6 PLY	1	D
		A---180 SERIAL 30000 THRU 50465 182 SERIAL 33000 THRU 51886 B---182 SERIAL 33000 THRU 33842 C---180 SERIAL 30000 THRU 50465 182 SERIAL 33843 THRU 51886 D---180 SERIAL 50466 & ON 182 SERIAL 51887 & ON E---180 SERIAL 50466 THRU 50729 182 SERIAL 51887 THRU 52455 & 52481 THRU 52586 F---180 SERIAL 50730 & ON 182 SERIAL 52456 THRU 52480 & 52587 & ON G---180 SERIAL 30000 THRU 18050966 182 SERIAL 33000 THRU 18253159 H---180 SERIAL 18050967 & ON 182 SERIAL 18253160 & ON *NOTE. WHEN ORDERING THIS PART ALSO ORDER 9521184. #NOTE. WHEN ORDERING BRAKE HOUSING FOR AIRCRAFT PRIOR TO 180 SERIAL 50466 & 182 SERIAL 51887 ALSO ORDER PARTS MARKED **. ■ NOTE. 13830 CUP-BEARING IS INCLUDED IN 9524201 & 9524802 WHEEL HALF SUB ASSEMBLIES. NOTE. ## WHEN ORDERING THIS PART FOR AIRCRAFT 180 SERIAL 50466 THRU 18051047 & 182 SERIAL 51887 THRU 18253494 ALSO ORDER 1 1241063-2 HUB CAP, 3 AN515-8R4 SCREWS, & 3 AN936-B8 WASHERS		

FIGURE AND INDEX NO.	PART NUMBER	DESCRIPTION 1 2 3 4 5 6 7	UNITS PER ASSY	USABLE ON CODE
130-		WHEEL ASSEMBLY-NOSE GEAR — 182 ALL SERIALS	NP	A
		WHEEL ASSEMBLY-NOSE GEAR — 182 ALL SERIALS	NP	C
		WHEEL ASSEMBLY-NOSE GEAR — 182 ALL SERIALS	NP	D
	0543005-1	WHEEL ASSEMBLY — 182 ALL SERIALS	1	A
	0442012-2	WHEEL ASSEMBLY GY — 182 ALL SERIALS	1	C
	0743001-2	WHEEL ASSEMBLY GY 9532669 — 182 ALL SERIALS	1	D
- 1	9510186	WHEEL SUBASSEMBLY-MALE	1	A
	9524192	WHEEL SUBASSEMBLY-MALE	1	C
	9532672	WHEEL SUB ASSEMBLY-MALE ----GY	1	D
- 2	9520925	WHEEL SUBASSEMBLY-FEMALE	1	A
	9524193	WHEEL SUBASSEMBLY-FEMALE	1	C
	9532671	WHEEL SUB ASSEMBLY-FEMALE	1	D
		ATTACHING PARTS		
- 3	9520206	BOLT-----GY	3	A
	AN4-14A	BOLT	3	B
- 4	954545	WASHER GY	6	A
	AN960-416	WASHER	6	B
- 5	951567	NUT GY	3	A
	22FH-428	NUT SPS	3	B
		---*---		
- 6	950472	CUP-BEARING GY	1	A
- 7	LM67010XL *	CUP-BEARING	1	B
	LM67048XL	CONE	2	B
- 8	AN6230B20	SEAL-O RING	1	B
- 9	9510236	RING-CLOSURE GY	7	A
- 10	954547	RING-FELT-----GY	2	A
- 11	955154	RING-RETAINING-----GY	2	A
- 12	950471	CONE-BEARING GY	2	A
- 13	9523566	BUSHING GY	1	A
	956891	CAPLUG GY	1	A
- 14	0543005-15	TIRE-5.00 X 5 6PLY	1	A
- 15	0543005-3	TUBE-5.00 X 5	1	A
- 16	S-1345-2	TIRE-TUBELESS	1	B
	0541162-1	VALVE-TUBELESS TIRE INFLATION	1	B
		A---182 SERIAL 33000 THRU 51886 B---182 SERIAL 51887 & ON C---182 SERIAL 51887 THRU 18253249 D---182 SERIAL 18253250 & ON * NOTE. LM 67010XL CUP-BEARING IS INCLUDED IN 9524192 & 9524193 WHEEL HALF SUBASSEMBLIES		

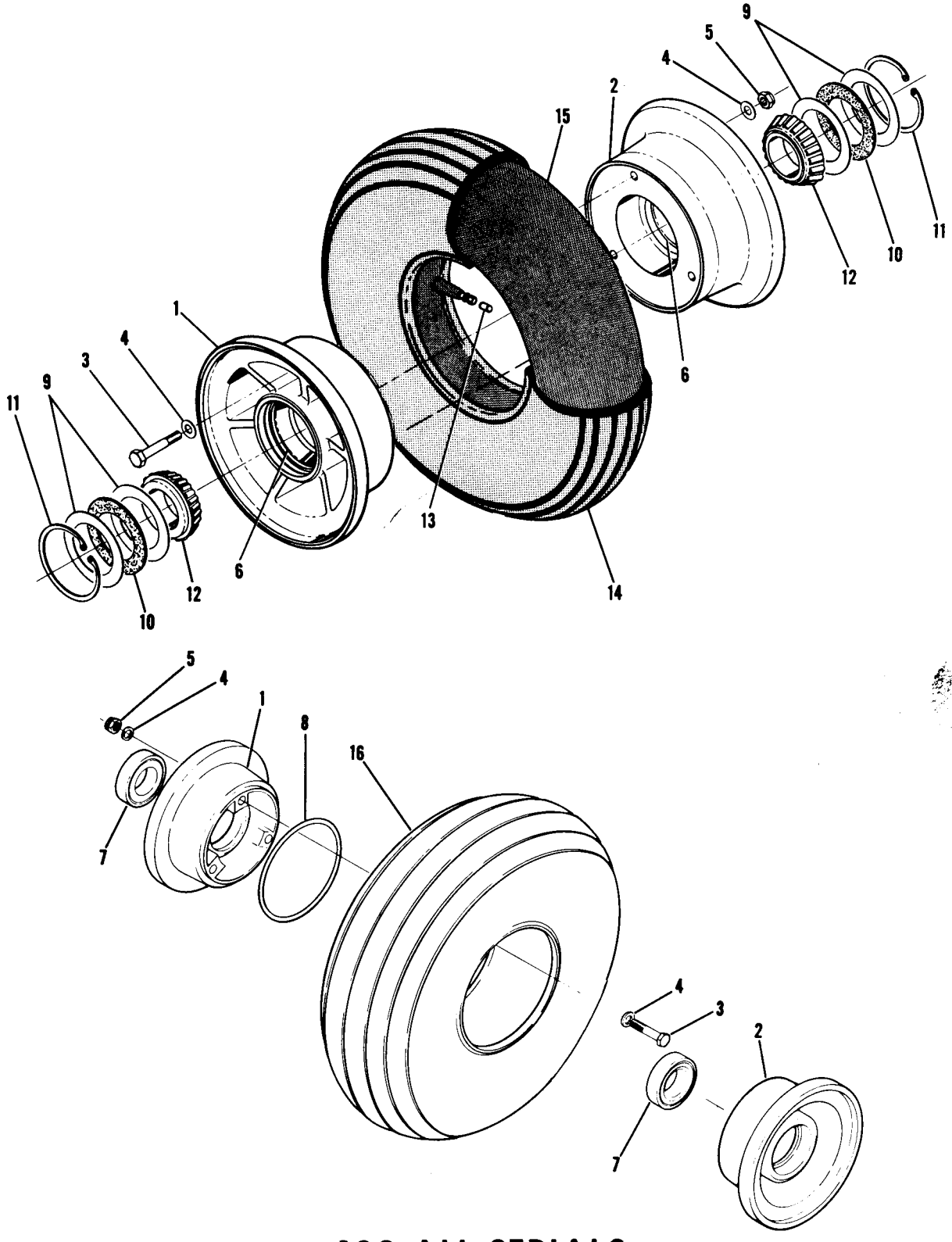

182 ALL SERIALS

Figure 130. Nose Wheel Assembly

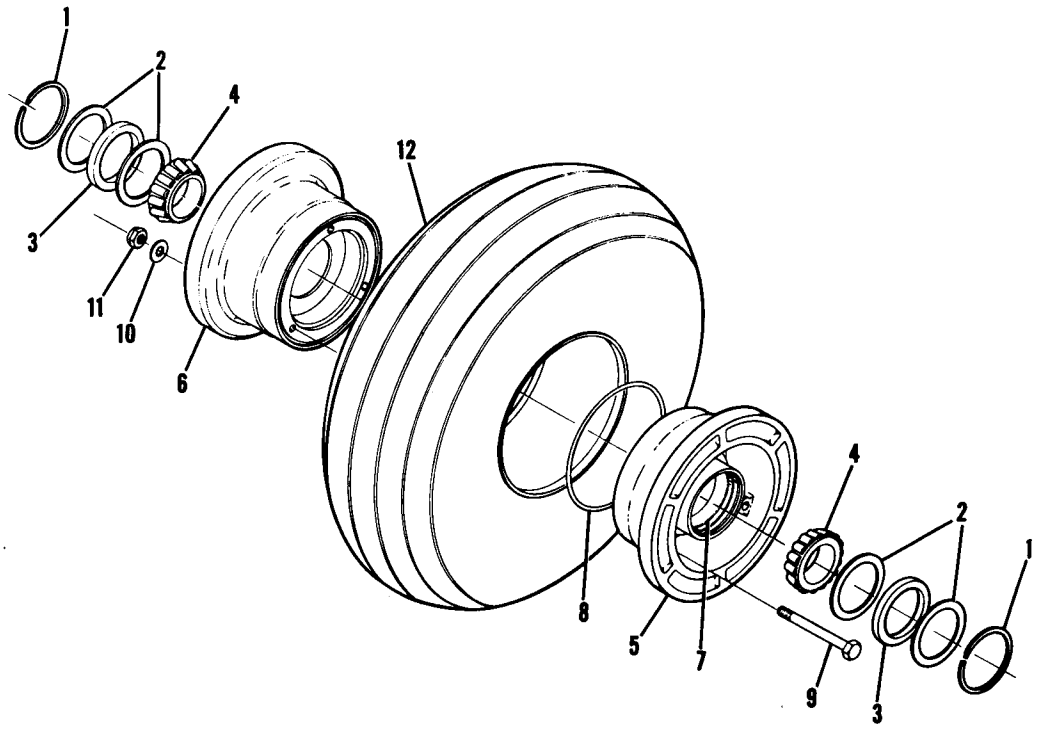

182 SERIAL 51887 & ON

Figure 130A. Nose Gear Wheel Assembly

FIGURE AND INDEX NO.	PART NUMBER	DESCRIPTION 1 2 3 4 5 6 7	UNITS PER ASSY	USABLE ON CODE
130A-		WHEEL ASSEMBLY-NOSE CLEVELAND ALT	NP	A
	0743001-4	WHEEL ASSEMBLY-NOSE CFP 40-35	1	
- 1	155-2	RING-----CFP	2	
- 2	153-8	RING-GREASE SEAL CFP	4	
- 3	154-6	GREASE SEAL-FELT CFP	2	
- 4	08125	BEARING CFP	2	
- 5	161-18	WHEEL HALF ASSEMBLY-MALE---- CFP	1	
- 6	162-16	WHEEL HALF ASSEMBLY-FEMALE CFP	1	
- 7	08231	CUP-BEARING CFP	1	
- 8	1866-22	O RING CFP	1	
- 9	AN4-31A	BOLT	3	
- 10	AN960-416	WASHER	3	
- 11	MS20365-428C	NUT	3	
- 12	S-1345-2	TIRE-TUBELESS 5.00 X 5 6 PLY	1	
	0541162-1	VALVE-TUBELESS TIRE INFLATION	1	
		A---182 SERIAL 51887 & ON		

This page intentionally left blank.

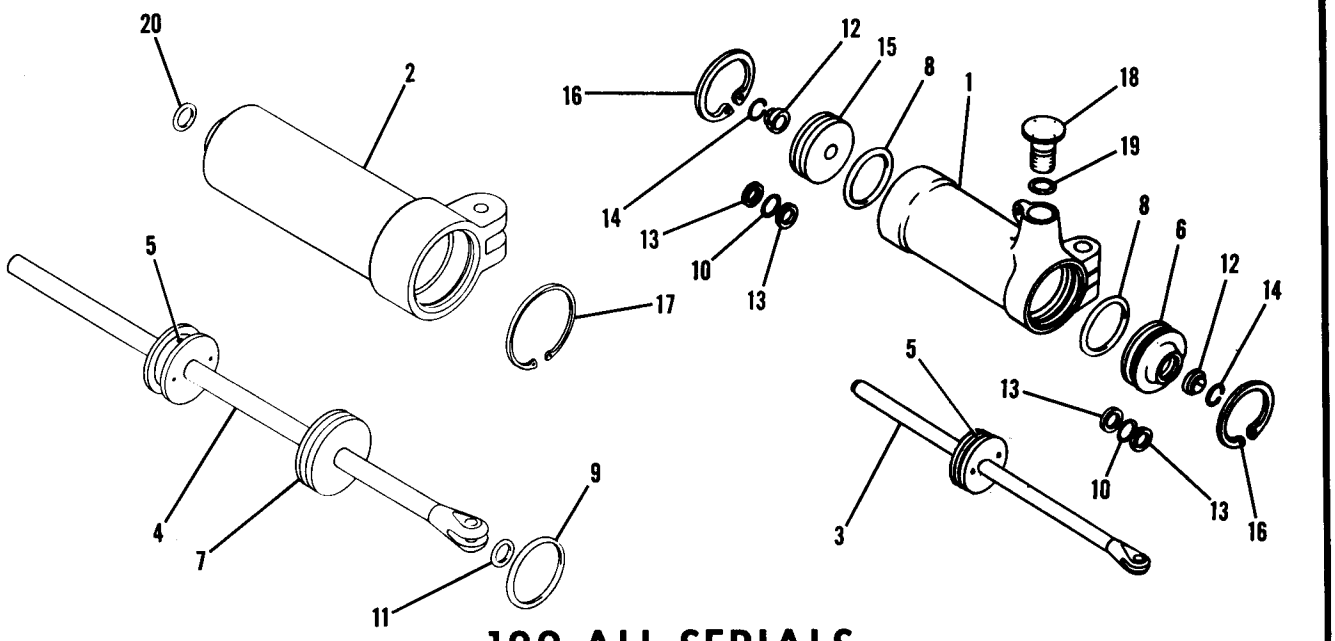

182 ALL SERIALS

Figure 131. Nose Wheel Shimmy Dampener

FIGURE AND INDEX NO.	PART NUMBER		DESCRIPTION 1 2 3 4 5 6 7	UNITS PER ASSY	USABLE ON CODE
131-	0842400-8		DAMPENER ASSEMBLY-SHIMMY	1	C
	0842400-10		DAMPENER ASSEMBLY-SHIMMY WHEN EXHAUSTED USE 0542119-1	1	D
	0542119-1		DAMPENER ASSEMBLY-SHIMMY	1	E
- 1	0842405-4	*	BARREL	1	C
	0842405-5	*	BARREL	1	D
- 2	0542100-1		BARREL	1	E
	0842400-16		PISTON ASSEMBLY	1	F
	0542118-1		PISTON ASSEMBLY	1	E
- 3	0842406-1		ROD ASSEMBLY-PISTON	1	F
- 4	0542101-1		ROD ASSEMBLY-PISTON	1	E
- 5	NAS561P4-14		ROLL PIN EN	1	
- 6	0842400-2		HEAD-BEARING	1	F
- 7	0542102-1		HEAD-BEARING	1	E
- 8	AN6227B20		O RING-OUTER	2	F
- 9	AN6227B20		O RING-OUTER	1	E
- 10	AN6227B6		O RING-INNER	2	F
- 11	AN6227B6		O RING-INNER	1	E
- 12	S11326		RING-WIPER SHWS	2	F
- 13	MS28782-6		RING-BACKUP SHWS	2	F
- 14	0842400-7		RING-LOCK	2	F
- 15	0842400-2		HEAD-BEARING	1	F
- 16	NAS669-131		RING-INTERNAL RETAINING	2	F
- 17	NAS669-131		RING-INTERNAL RETAINING	1	E
- 18	0842400-4		PLUG-FILLER	1	A
	AN814-5DL	#	PLUG-FILLER	1	B
- 19	AN6227B7		O RING-FILLER PLUG	1	
- 20	AN6227B6		O RING-BARREL	1	E

A---182 SERIAL 33000 THRU 33842
B---182 SERIAL 33843 THRU 52669
C---182 SERIAL 33000 THRU 51556
D---182 SERIAL 51557 THRU 52770
E---182 SERIAL 52771 & ON
F---182 SERIAL 33000 THRU 52669

*NOTE. WHEN ORDERING THIS PART FOR AIRCRAFT SERIAL 33000 THRU 33842 ALSO ORDER PART MARKED #

FIGURE AND INDEX NO.	PART NUMBER	DESCRIPTION 1 2 3 4 5 6 7	UNITS PER ASSY	USABLE ON CODE
132-		WHEEL & BRAKE ASSEMBLIES-CROSSWIND LANDING GEAR----------	NP	A
- 1	0441016-24	TIRE-6.00X6 6 PLY ----------	1	
	0441016-13	TUBE-6.00X6----------	1	
- 2	0441150-8	WHEEL, BRAKE & COLLAR ASSEMBLY-CROSSWIND LANDING GEAR LH	1	
	0441150-9	WHEEL, BRAKE & COLLAR ASSEMBLY-CROSSWIND LANDING GEAR RH	1	
- 3	0441150-2	COLLAR-CROSSWIND WHEEL AXLE LH ----------	1	
	0441150-3	COLLAR-CROSSWIND WHEEL AXLE RH ----------	1	
		ATTACHING PARTS		
- 4	0441151	BOLT----------	2	
- 5	AN960-616L	WASHER ----------	2	
- 6	MS20364-624C	NUT ----------	2	
		---*---		
- 7	95-5242	CLAMP GY ----------	1	
	0541116-2	WHEEL ASSEMBLY-CROSSWIND LH ----------	1	
	0541116-3	WHEEL ASSEMBLY-CROSSWIND RH ----------	1	
- 8	9510816	WHEEL SUBASSEMBLY-INBOARD HALF GY ----------	1	
- 9	95-5216	CUP-BEARING GY ----------	1	
- 10	9510871	KEY-DISC DRIVE GY ----------	8	
		ATTACHING PARTS		
- 11	9520644	SCREW----------	8	
	AN960-416L	WASHER ----------	8	
		---*---		
- 12	95-10993	WHEEL SUBASSEMBLY-OUTBOARD HALF-----GY ----------	1	
		ATTACHING PARTS		
- 13	AN4-45A	BOLT ----------	4	
- 14	AN960-416	WASHER ----------	4	
- 15	MS20365-428C	NUT ----------	4	
		---*---		
- 16	95-5216	CUP-BEARING GY ----------	1	
- 17	9520061	HUB AND AXLE ASSEMBLY ----GY ----------	1	
- 18	95-5217	CONE-BEARING GY ----------	2	
- 19	9510983	SHIM-PACK GY ----------	1	
- 20	9510978	PLATE-INBOARD BEARING SEAL-----GY ----------	1	
- 21	9510977	GASKET-BEARING SEAL GY----------	1	
- 22	9530373	PLATE-DEFLECTOR LH GY ----------	1	
	9530374	PLATE-DEFLECTOR RH GY ----------	1	
		ATTACHING PARTS		
- 23	AN515-6-8	SCREW ----------	3	
- 24	AN936A6	WASHER-LOCK ----------	3	
		---*---		
- 25	9520424	BOOT-AXLE GY ----------	1	
- 26	9510966	PLATE-STABILIZER CAP GASKET GY ----------	1	
- 27	9510965	GASKET-STABILIZER CAP ----GY ----------	1	
- 28	9521246	CAP-STABILIZER GY ----------	1	
		ATTACHING PARTS		
- 29	AN74A5	BOLT ----------	2	
- 30	AN935-416	WASHER-LOCK ----------	2	
		---*---		

180 ALL SERIALS

CONTINUED ON PAGES 350 & 351

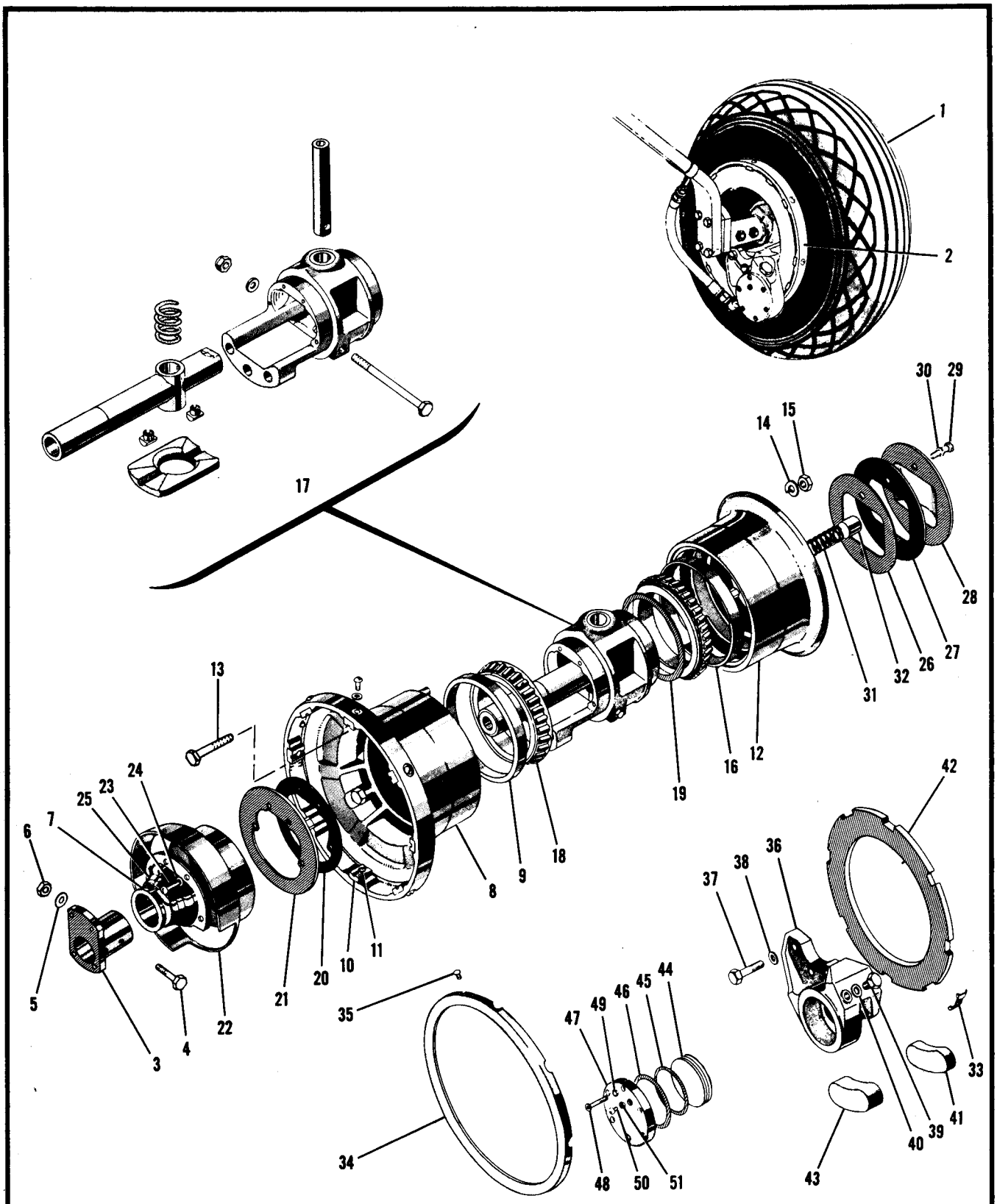

180 ALL SERIALS

Figure 132. Crosswind Wheel and Brake Assembly

FIGURE AND INDEX NO.	PART NUMBER	DESCRIPTION 1 2 3 4 5 6 7	UNITS PER ASSY	USABLE ON CODE
132- 31	9511005	SPRING-STABILIZER BRAKE GY	1	
- 32	9510988	LINING-STABILIZER BRAKE GY	1	
- 33	9520675	CLIP-ANTI RATTLE WITHOUT RETAINING RING GY	4	
	9511103	CLIP-ANTI RATTLE WITH RETAINING RING GY	4	
- 34	9530593	RING-DISC RETAINING-----GY	1	
		ATTACHING PARTS		
- 35	95-5383	FASTENER UC	4	
		---*---		
	0541116-26	BRAKE ASSEMBLY-LH	1	
	0541116-25	BRAKE ASSEMBLY-RH	1	
- 36	0541116-28	HOUSING-LH	1	
	0541116-27	HOUSING-RH	1	
		ATTACHING PARTS		
- 37	AN75A10	BOLT	3	
- 38	AN960-516	WASHER	3	
		---*---		
- 39	9520448	PLUG-INLET GY	1	
- 40	AN902B4	GASKET-INLET	2	
- 41	9511271	LINING-BRAKE STATIONARY GY	1	
- 42	9530084	DISC-ROTATING BRAKE GY	1	
- 43	9511269	LINING-BRAKE PISTON SIDE GY	1	
	9510734	LINING-BRAKE PISTON SIDE GY-----ALT	1	
- 44	9510155	PISTON-BRAKE-----GY	1	
- 45	AN6230B2	SEAL-PISTON	1	
- 46	AN6230B3	SEAL-CYLINDER HEAD	1	
- 47	9510971	CYLINDER HEAD-BRAKE GY	1	
		ATTACHING PARTS		
- 48	95-5163	SCREW GY	6	
- 49	AN936C10	WASHER	6	
		---*---		
- 50	AN505-8R5	SCREW-BLEEDER	1	
- 51	9510957	SEAL-BLEEDER SCREW GY	1	
		A---180 SERIAL 30000 & ON		

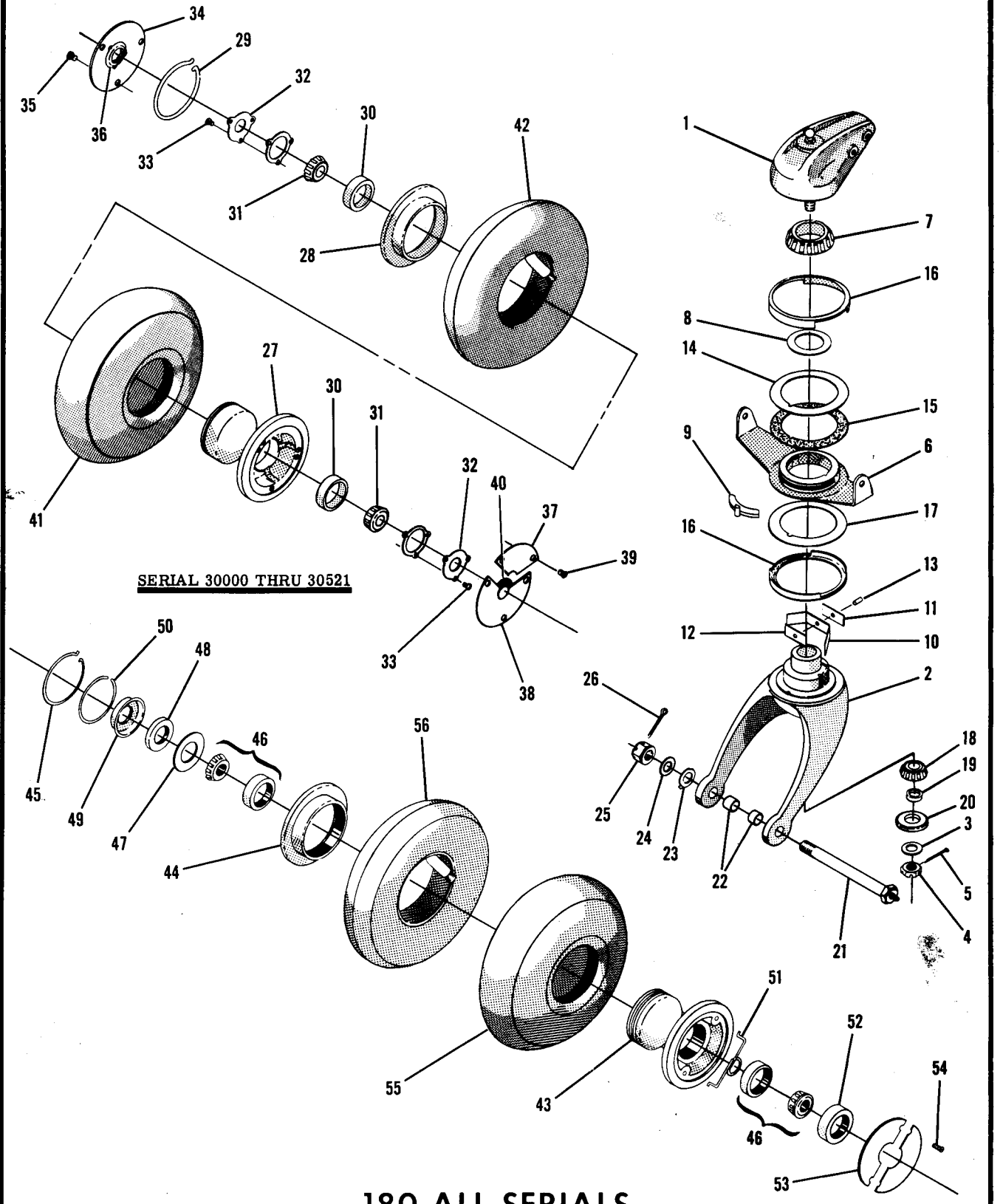

180 ALL SERIALS

Figure 133. Tail Wheel Assembly

FIGURE AND INDEX NO.	PART NUMBER		DESCRIPTION 1 2 3 4 5 6 7	UNITS PER ASSY	USABLE ON CODE
133-	0742400		TAIL WHEEL ASSEMBLY	1	C
	0742400-10		FORK & BRACKET ASSEMBLY-TAIL WHEEL ---- 180 ALL	1	
- 1	3412		BRACKET ASSEMBLY SCA----------	1	
	MS15001-4		FITTING-LUBRICATION AL--------- SERIALS	1	
	08231	#	CUP-BEARING T1 ----------	1	
- 2	3413		FORK ASSEMBLY SCA ----------	1	
			ATTACHING PARTS		
- 3	AN960-816		WASHER ----------	1	
- 4	AN320-8		NUT ----------	1	
- 5	MS24665-283		PIN-COTTER ----------	1	
	A4138	*	CUP-BEARING T1 ----------	1	
	3226		PIN SCA ----------	1	
			---*---		
- 6	3410		ARM ASSEMBLY SCA ----------	1	
- 7	08118	#	CONE-BEARING T1----------	1	
- 8	3407		SPACER SCA----------	AR	
- 9	3219		PAWL-----SCA ----------	1	
- 10	3222		SPRING SCA----------	1	
- 11	3258		SPACER-SPRING SCA ----------	1	
- 12	3258-1		SPACER-SPRING SCA ----------	1	
- 13	3257		PIN-STAKING SCA----------	1	
- 14	3408		WASHER-STEEL SCA ----------	1	
- 15	3409		WASHER-FORMICA-----SCA ----------	1	
- 16	[illegible]1		DUST CAP SET SCA ----------	1	
- 17	3408-2		WASHER SCA----------	1	
- 18	A4050	*	CONE-BEARING T1----------	1	
- 19	2504-1		SPACER ----------	1	
- 20	1863		RETAINER-GREASE ----------	1	
	0542111-12		WHEEL & TIRE ASSEMBLY----------	1	A
	0742401		WHEEL & TIRE ASSEMBLY----------	1	B
			ATTACHING PARTS		
- 21	3236C-2		AXLE ASSEMBLY ----------	1	
- 22	0742200-4		BUSHING ----------	2	A
	0742400-11		BUSHING ----------	2	B
- 23	3225		WASHER-LOCK-----SCA ----------	1	
- 24	AN960-816		WASHER----------	1	
- 25	AN310-8		NUT ----------	1	
- 26	MS24665-283		PIN-COTTER ----------	1	
			---*---		
	0542111		WHEEL ASSEMBLY----------	1	A
- 27	0542111-8		SUBASSEMBLY-WHEEL----------	1	
- 28	0542111-5		FLANGE-DEMOUNTABLE ----------	1	
- 29	0542111-4		RING-FLANGE RETAINING ----------	1	
- 30	0542111-9		CUP-BEARING ----------	2	
- 31	0542111-7		CONE-BEARING----------	2	
- 32	0542111-6		COVER-BEARING ----------	2	
			ATTACHING PARTS		
- 33	AN515-6-4		SCREW ----------	6	
			---*---		
- 34	0542111-2		FAIRING ASSEMBLY-WHEEL----------	1	
			ATTACHING PARTS		
- 35	AN505-6-4		SCREW ----------	3	
			---*---		
- 36	0542111-3		RING-FELT SEAL ----------	1	
- 37	0542111-11		FAIRING-VALVE ACCESS ----------	1	
- 38	0542111-10		FAIRING ASSEMBLY-WHEEL----------	1	
			ATTACHING PARTS		
- 39	AN505-6-4		SCREW ----------	3	
			---*---		
- 40	0542111-3		RING-FELT SEAL ----------	1	
- 41	0542111-13		TIRE-8 INCHES S. C.----------	1	A
- 42	0542111-14		TUBE-8 INCHES X 3-1/4 INCHES S. C. ----------	1	A
	0742401-1		WHEEL ASSEMBLY----------	1	B

CONTINUED ON PAGE 354

FIGURE AND INDEX NO.	PART NUMBER	DESCRIPTION 1 2 3 4 5 6 7	UNITS PER ASSY	USABLE ON CODE
133- 43	0742401-10	SUBASSEMBLY-WHEEL	1	
- 44	0742401-4	FLANGE	1	
- 45	0742401-5	RING-FLANGE RETAINING	1	
- 46	0442006-11	BEARING SET-INCLUDES CONE & CUP	2	
- 47	0742401-6	PLATE-GREASE RETAINER INNER	1	
- 48	0742401-7	RING-GREASE RETAINER FELT	1	
- 49	0742401-8	PLATE-GREASE RETAINER OUTER	1	
- 50	0742401-9	RING-GREASE RETAINER RETAINING	1	
- 51	0742401-11	SPRING-VALVE STEM RETAINING	1	
- 52	0742401-13	RETAINER-GREASE	1	
- 53	0742401-12	PLATE-FAIRING	2	
		ATTACHING PARTS		
- 54	AN520-10-6	SCREW	2	
		---*---		
- 55	0742401-3	TIRE-8 INCHES S. C.	1	B
- 56	0742401-14	TUBE-8 INCHES X3-1/4 INCHES S. C.	1	B

A---180 SERIAL 30000 THRU 30521
B---180 SERIAL 30522 & ON
C---180 SERIAL 30000 & ON

NOTE. # FOR COMPLETE BEARING SET CONSISTING OF 08118 CONE & 08231 CUP ORDER 0742400-12.

NOTE. * FOR COMPLETE BEARING SET CONSISTING OF A4050 CONE & A4138 CUP ORDER 0442006-11.

FIGURE AND INDEX NO.	PART NUMBER		DESCRIPTION 1 2 3 4 5 6 7	UNITS PER ASSY	USABLE ON CODE
134-	0752002-100		PROPELLER ASSEMBLY-84 INCH DIA HTP BHC-A2XF-1A 12.00 8433S	1	A
	0752002-98		PROPELLER ASSEMBLY-82 IN DIA---- HTP BHC-A2XF-1A 12.00 8433-2	1	B
	0752002-102		PROPELLER ASSEMBLY-88 INCH DIA HTP BHC-A2XF-1A 12.00 8833S	1	C
	840-47		HUB ASSEMBLY-SPIDER HTP ------- 180-182 --------	1	J
	840-51		HUB ASSEMBLY-SPIDER HPT ------- 180-182 --------	1	P
	840-35		HUB ASSEMBLY-SPIDER HTP --- ALL SERIALS ----	1	D
	840-1		HUB ASSEMBLY-SPIDER HTP --- ALL SERIALS ----	1	E
	840-6		HUB ASSEMBLY-SPIDER HTP ----------	1	F
- 1	A-158L		TUBE-BLADE PILOT HTP ----------	2	
- 2			HUB-SPIDER HTP REF C-981-2 ----------	NP	J
- 3			HUB-SPIDER HTP REF C-801-11B ----------	NP	D
	C-801-1		HUB-SPIDER HTP ----------	1	E
	C-801-6		HUB-SPIDER HTP ----------	1	F
- 4	A-114-C	*	PIN-STAKING HTP ----------	4	G
- 5	A-116-A	*	BUSHING-----HTP ----------	2	G
- 6			COLLAR ASSEMBLY-GUIDE-----HTP REF 834-4 ----------	NP	M
			COLLAR ASSEMBLY-GUIDE-----HPT REF 834-9 ----------	1	P
- 7	A-14-A		BEARING-BLADE HTP----------	2	L
	A-14-B		BEARING-BLADE HTP----------	2	K
- 8	A-159N		RING-SPLIT HTP ----------	2	L
	A-969		RING-SPLIT HTP ----------	2	K
- 9	A-971		BEARING-BLADE HTP-----SPLIT ON INSTALLATION ----------	2	J
- 10	A-972		HOOP-BEARING GUIDE HTP----------	2	J
- 11	A-974		RETENTION RING-WIRE HTP ----------	4	J
- 12	•5002X1		PIN-DOWEL DANLEY ----------	2	
- 13	AN6230B6		O RING----------	3	
- 14	AN8H7A		BOLT ----------	6	
	838-2		CLAMP & COUNTERWEIGHT ASSEMBLY-----HTP ----------	2	H
	838-3		CLAMP & COUNTERWEIGHT ASSEMBLY-----HTP ----------	2	F
- 15	C-3-1A		CLAMP HTP ----------	2	H
	C-3-1		CLAMP HTP ----------	2	E
- 16	C-3-6		CLAMP HTP ----------	2	F
			ATTACHING PARTS		
- 17	AN6-21A		BOLT----------	2	
- 18	AN960-616		WASHER ----------	2	
- 19	MS20365-624C		NUT ----------	2	
- 20	A-282		SCREW HTP ----------	2	
- 21	MS24665-283		PIN-COTTER ----------	2	
			---*---		
- 22	•375X3/4		PIN-DOWEL-----DANLEY ----------	2	F
- 23	B-891-1		SUBASSEMBLY-COUNTERWEIGHT HTP----------	1	H
			ATTACHING PARTS		
- 24	7/16-20X3		SCREW-SOCKET HEAD CAP HTP ----------	2	
- 25	MS24665-283		PIN-COTTER ----------	2	
- 26	A-65		PIN-STAKING HTP----------	1	
			---*---		
- 27	AN944-101		FITTING-ZERK ----------	3	
- 28	A-47-1		GASKET-CLAMP HTP ----------	4	
- 29	A-48		WEIGHT-BALANCE----------	AR	
			ATTACHING PARTS		
- 30	AN501A10-	**	SCREW ----------	4	
			---*---		
- 31	A-95-A	#	BLOCK-PITCH CHANGE HTP----------	2	
			ATTACHING PARTS		
- 32	A-295	##	SCREW HTP ----------	1	
	A-98-B	##	SCREW HTP ----------	1	E
- 33	A-285	##	PIN-STAKING-----HTP ----------	1	
			---*---		
- 34	B-806		CYLINDER-HYDRAULIC HTP----------	1	
- 35	A-810		SEAL-PISTON-----HTP ----------	1	
- 36	AN6227B46		O RING-PISTON SEAL ----------	1	
- 37	AN6230B13		O RING-CYLINDER SEAL ----------	1	
	B-828-8	□	JACK SUBASSEMBLY-PISTON HTP ----------	1	
- 38			DELETED, NOT PROCURABLE ----------		
- 39	A-862		BUSHING HTP ----------	1	
- 40	A-826-1		ROD-PISTON HTP ----------	2	
			ATTACHING PARTS		
- 41	A-114-F		PIN-STAKING HTP----------	1	
			---*--- -		

CONTINUED ON PAGES 356 & 357

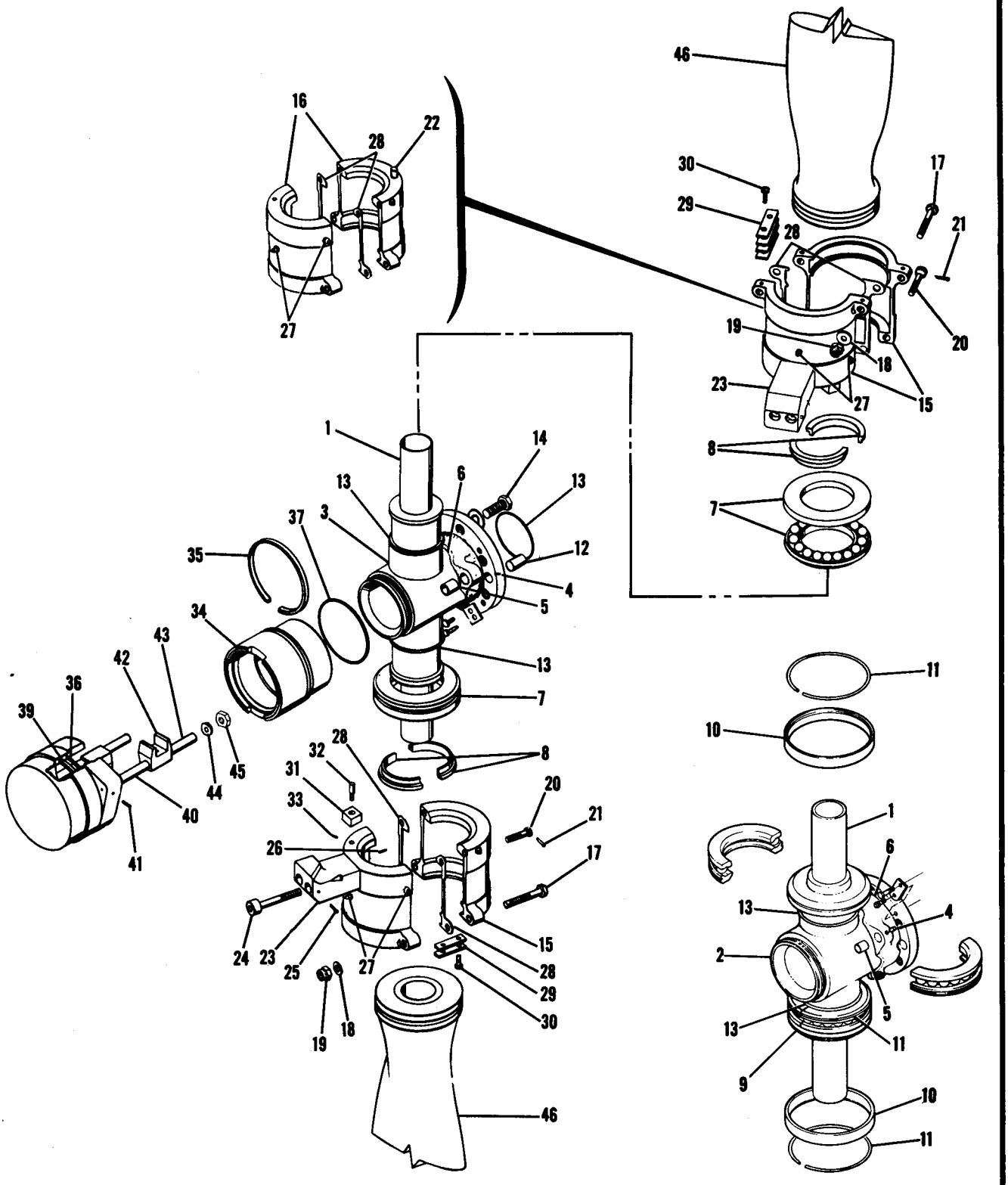

180-182 ALL SERIALS

Figure 134. Hartzell Propeller Assembly

FIGURE AND INDEX NO.	PART NUMBER	DESCRIPTION 1 2 3 4 5 6 7	UNITS PER ASSY	USABLE ON CODE
134- 42	A-821-1	FORK-GUIDE ROD-----HTP	2	
- 43	A-827-1	BUSHING-GUIDE HTP	2	
- 44	AN960-C716	WASHER	2	
- 45	MS20364-720C	NUT-FLEXLOC	2	
- 46	8433S	BLADE ASSEMBLY-84 INCH DIA	2	A
	8433-2	BLADE ASSEMBLY-82 INCH DIA	2	B
	8833S	BLADE ASSEMBLY-88 INCH DIA	2	C

A---180 SERIAL 30000 & ON
B---182 SERIAL 33000 & ON
C---180 AMPHIBIAN & 180 SEAPLANE SERIAL 30000 & ON
D---USED ONLY ON HARTZELL MODEL HC82XF-1DB
E---USED ONLY ON HARTZELL MODELS HC82XF-1 & HC82XF-1B
F---USED ONLY ON HARTZELL MODEL HC82XF-6B
G---USED ONLY ON HARTZELL MODELS HC82XF-1, HC82XF-1B, & HC82XF-6B
H---USED ONLY ON HARTZELL MODELS HC82XF-1, HC82XF-1B, HC82XF-1DB, HC82XF-1DB1, & BHC-A2XF-1
J---USED ONLY ON HARTZELL MODEL BHC-A2XF-1
K---USED ONLY ON HARTZELL MODEL HC82XF-1DB1
L---USED ONLY ON HARTZELL MODELS HC82XF-1, HC82XF-1B, HC82XF-6B, & HC82XF-1DB
M---USED ONLY ON HARTZELL MODELS HC82XF-1DB, HC82XF-1DB1, & BHC-A2XF-1
P---USED ONLY ON HARTZELL MODELL BHC-A2XF-1A

*NOTE. THESE ITEMS ARE PART OF 840-35 HUB ASSEMBLY
**NOTE. LENGTH OF SCREW VARIES WITH NUMBER OF BALANCE WEIGHTS USED.
#NOTE. THIS ITEM MAY BE USED ON HARTZELL MODELS HC82XF-1 & HC82XF-1B PROPELLER ASSEMBLIES IF A-821-1 FORK IS ALSO USED.
□NOTE. WHEN ORDERING THIS ITEM FOR HARTZELL MODELS HC82XF-1 & HC82XF-1B PROPELLER ASSEMBLIES ALSO ORDER A-95-A BLOCK.
##NOTE. THESE ITEMS ARE PART OF 838-2 & 838-3 CLAMP & COUNTERWEIGHT ASSEMBLIES.

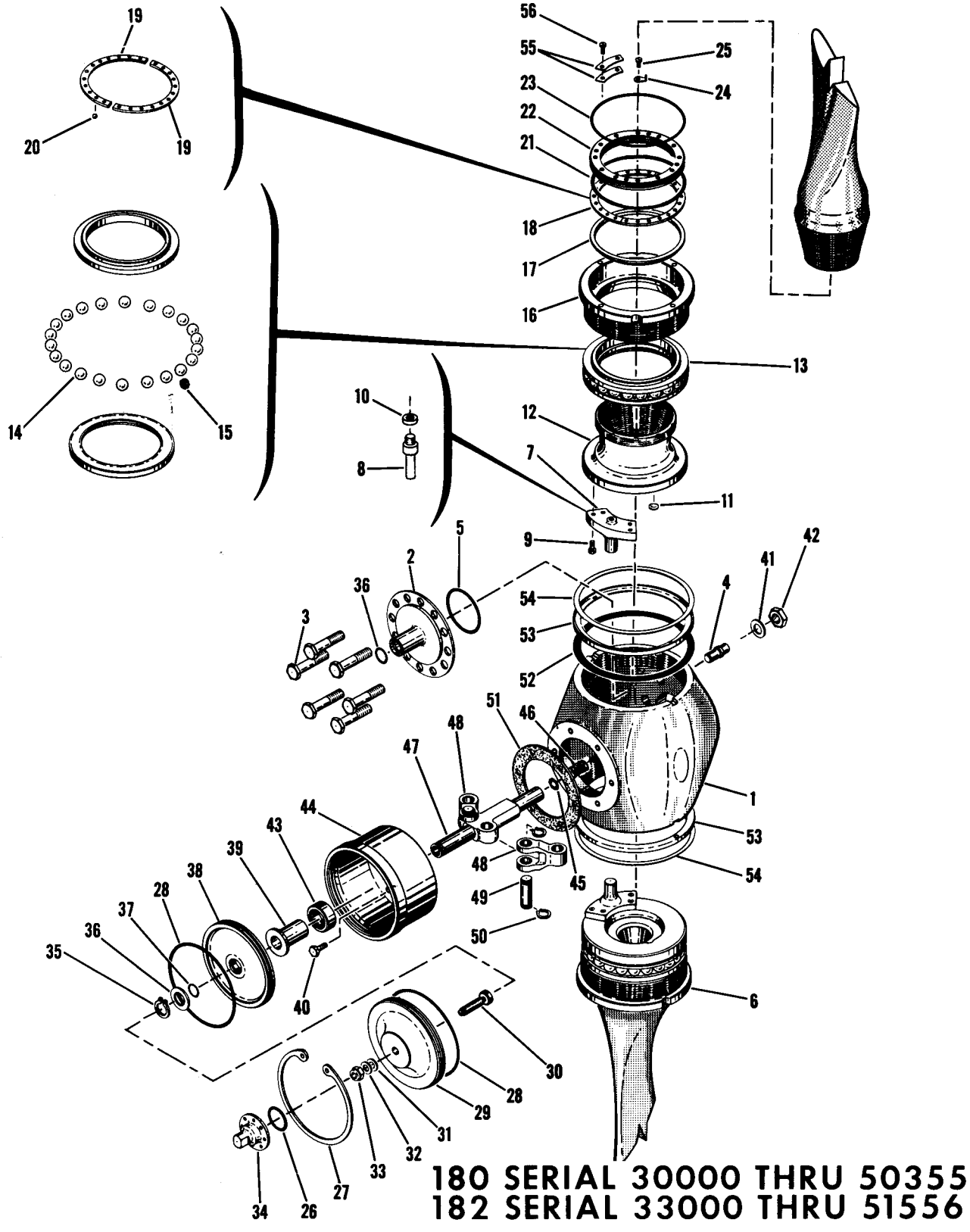

Figure 135. McCauley Propeller Assembly

FIGURE AND INDEX NO.	PART NUMBER		DESCRIPTION 1 2 3 4 5 6 7	UNITS PER ASSY	USABLE ON CODE
135-		*	PROPELLER ASSEMBLY-82 INCHES DIA-----MCL 2A36C1/90M-8 ----	NP	A
		*	PROPELLER ASSEMBLY-82 INCHES DIA-----MCL 2A36C18/90M-8 ----	NP	B
		*	PROPELLER ASSEMBLY-88 INCHES DIA-----MCL 2A36C1/90M-2 ----	NP	C
	C-1579		HUB ASSEMBLY-PROPELLER MCL----------	1	
- 1	E-1558		HUB-PROPELLER MCL ----------	1	
- 2	C-1571		FLANGE-HUB AND PISTON GUIDE MCL	1	
- 3	A-1561-2		BOLT-----MCL ----------	6	
- 4	A-1562		DOWEL MCL ----------	2	
- 5	A-1633-3		O RING-----MCL ----------	1	
- 6	D-1594/90M-8		BLADE ASSEMBLY-PROPELLER MCL ------	2	A
	D-1594/90M-2		BLADE ASSEMBLY-PROPELLER MCL --	2	C
	D-2006/90M-8		BLADE ASSEMBLY-PROPELLER MCL --	2	B
- 7	B-1567		PIN-BLADE ACTUATING-----MCL ----	1	D
- 8	A-1882		PIN-BLADE ACTUATING-----MCL ----	1	B
			ATTACHING PARTS		
- 9	A-1635-1		SCREW MCL ----------	4	D
- 10	A-1883		WASHER MCL----------	1	B
			---*---		
- 11	A-1580		PLUG-FERRULE LOCKING MCL----------	1	
- 12			FERRULE-BLADE RETENTION ----MCL REF C-1596 ---------	NP	D
			FERRULE-BLADE RETENTION ----MCL REF C-1930 ---------	NP	B
- 13			BEARING ASSEMBLY-BLADE RETENTION MCL REF C-1587	NP	
- 14	A-1634-4		BALL-BEARING-----MCL ----------	22	
- 15	A-1742		SEPARATOR-BALL-----MCL ----------	22	
- 16			NUT-BLADE RETENTION-----MCL C-1588----------	NP	D
			NUT-BLADE RETENTION-----MCL REF C-1976 ----------	NP	B
- 17	B-1590		RACE-PRELOAD MCL ----------	1	D
	B-1975		RACE-PRELOAD MCL ----------	1	B
- 18	B-1592		BEARING ASSEMBLY-PRELOAD---- MCL ----------	1	
- 19	B-1591		RETAINER-PRELOAD BEARING MCL ----------	1	
- 20	A-1634-1		BALL-BEARING-----MCL ----------	24	
	A-1634-2		BALL-BEARING-----MCL ALTERNATE ----------	24	
- 21	A-1977		GASKET MCL----------	1	B
- 22			NUT-PRELOAD MCL-----REF B-1593 ----------	NP	D
			NUT-PRELOAD MCL-----REF B-1947 ----------	NP	B
- 23	A-1633-5		O RING----------	1	
- 24	A-1598		LOCK-PRELOAD NUT-----MCL ----------	1	
			ATTACHING PARTS		
- 25	A-1635-2		SCREW ----------	1	D
	A-1635-3		SCREW ----------	1	B
			---*---		
- 26	A-1633-4		O RING----------	1	D
- 27	A-1636-2		RING-INTERNAL RETAINING MCL ----------	1	
- 28	A-1633-5		O RING----------	2	
- 29	B-1608		HEAD-CYLINDER MCL----------	1	
- 30	A-1609		SCREW-LOW PITCH STOP MCL ----------	1	
			ATTACHING PARTS		
- 31	A-1638-1		WASHER----------	1	D
- 32	A-1750-1		SEAL-DYNA MCL ----------	1	B
- 33	A-1639-1		NUT ----------	1	
			---*---		
- 34	A-1610		COVER-LOW PITCH STOP MCL ----------	1	D
- 35	A-1636-1		RING-BOWED RETAINING MCL ----------	1	
- 36	A-1552		WASHER-PISTON MCL----------	1	
- 37	A-1633-1		O RING-----MCL ----------	2	
- 38	B-1574		PISTON-----MCL ----------	1	
- 39	A-1641-1		SLEEVE-PISTON ROD MCL ----------	1	
- 40	A-1635-6		BOLT ----------	6	
- 41	AN960-816		WASHER----------	6	
- 42	A-1632-2		NUT ----------	6	
- 43	A-1614-5		SLEEVE-HIGH PITCH STOP MCL----------	1	D
- 44	B-1613		CYLINDER ASSEMBLY MCL ----------	1	
- 45	A-1638-3		WASHER-----MCL ----------	1	B

CONTINUED ON PAGE 360

180 SERIAL 30000 THRU 50355
182 SERIAL 33000 THRU 51556

FIGURE AND INDEX NO.	PART NUMBER	DESCRIPTION 1 2 3 4 5 6 7	UNITS PER ASSY	USABLE ON CODE
135- 46	A-1999	SPRING-LOW PITCH RETURN MCL	1	B
	B-1578	ROD ASSEMBLY-PISTON MCL	1	D
	B-2000	ROD ASSEMBLY-PISTON MCL	1	B
- 47	B-1566	ROD-PISTON MCL	1	
- 48	A-1617	LINK ASSEMBLY MCL	2	D
	A-1998	LINK ASSEMBLY MCL	2	B
		ATTACHING PARTS		
- 49	A-1553	PIN MCL	2	
- 50	A-1636-3	RING	4	
		---*---		
- 51	B-1569	GASKET-CYLINDER MCL	1	
- 52	A-1633-8	O RING-----MCL	1	
- 53	B-1564	RING-RETENTION MCL	2	
- 54	A-1563-1	SHIM-BALANCING MCL	2	
- 55	A-1599	WEIGHT-BALANCE MCL	AR	
		ATTACHING PARTS		
- 56	A-1635-2	SCREW-ATTACH 1 WEIGHT	AR	
	A-1635-3	SCREW-ATTACH 2 WEIGHTS	AR	
	A-1635-4	SCREW-ATTACH 3 WEIGHTS	AR	
	A-1635-5	SCREW-ATTACH 4 WEIGHTS	AR	
	AN115809	SCREW-ATTACH 5 WEIGHTS	AR	
		---*---		
		A---180 SERIALS 30000 THRU 32996 182 SERIALS 33000 THRU 34529		
		B---180 SERIALS 32997 THRU 50355 182 SERIALS 34530 THRU 51556		
		C---180 AMPHIBIAN & 180 SEAPLANE 30000 THRU 50355		
		D---USED ONLY ON MCCAULEY MODELS 2A36C1/90M-8 & 2A36C1/90M-2		
		NOTE. * WHEN REPLACING COMPLETE PROPELLER ASSEMBLY FOR AIRCRAFT 180 SERIAL 30000 THRU 50355 & 182 SERIAL 33000 THRU 51556, SEE FIGURE 136		

This page intentionally left blank.

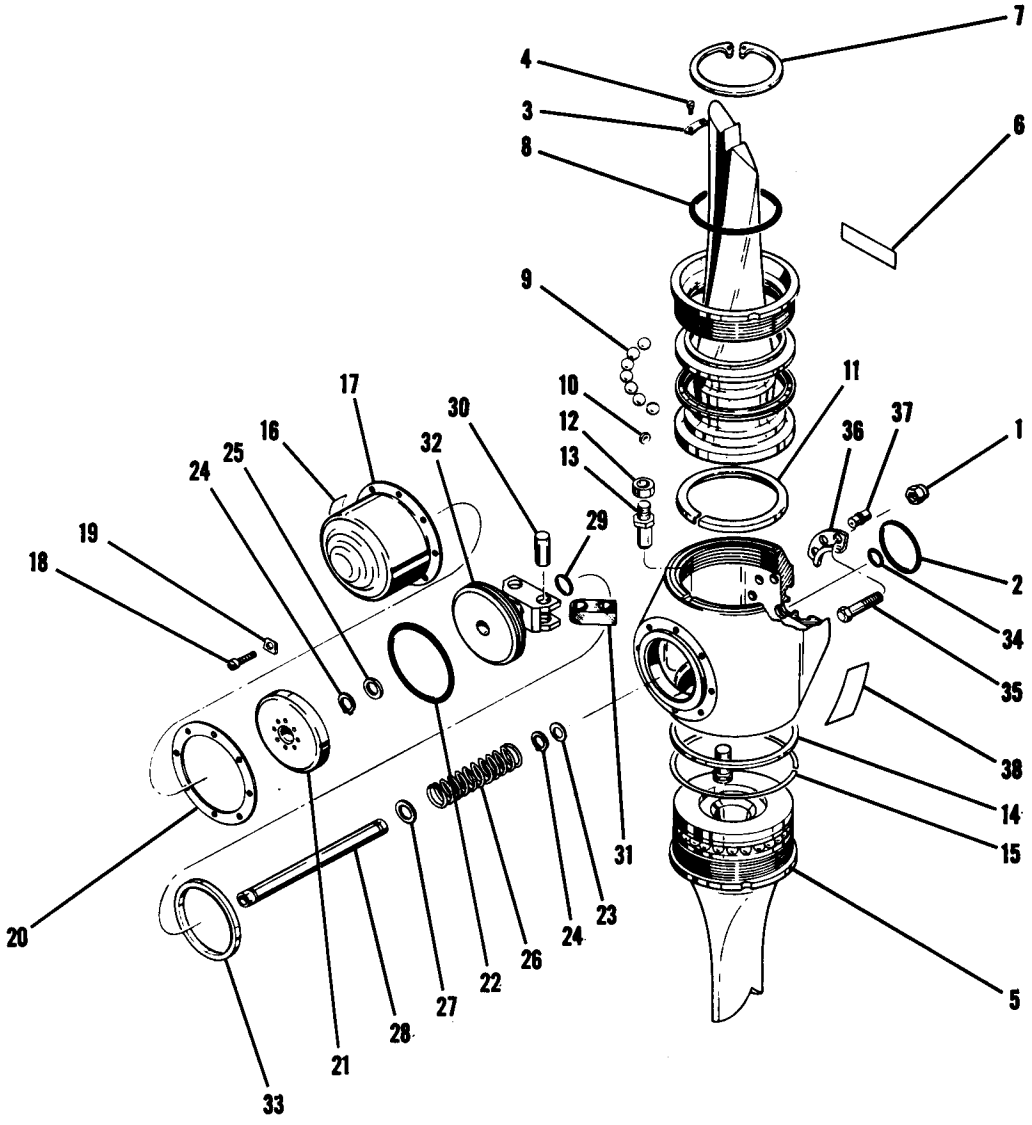

180-182 ALL SERIALS

Figure 136. McCauley Propeller Assembly

FIGURE AND INDEX NO.	PART NUMBER	DESCRIPTION 1 2 3 4 5 6 7	UNITS PER ASSY	USABLE ON CODE
136-	0752024-3 *	PROPELLER ASSEMBLY-MODEL 2A36C29-90M8 82 INCH DIA. --------- MCL D2301 OPT	1	B
	0752024-4 *	PROPELLER ASSEMBLY-MODEL 2A36C29-90M2 88 INCH DIA. --------- MCL D2301 OPT	1	A
		ATTACHING PARTS		
- 1	A-1639-2	NUT MCL ----------	6	
- 2	A-1633-3	PACKING-O RING MCL ---------- 180-182 --------	1	
		---*---		
- 3	A-2104	WEIGHT-BALANCE MCL ------- ALL SERIALS -----	AR	
		ATTACHING PARTS		
- 4	A-1635-16	SCREW-ATTACH ONE WEIGHT MCL ----------	AR	
	A-1635-17	SCREW-ATTACH TWO WEIGHTS MCL ----------	AR	
	A-1635-18	SCREW-ATTACH THREE WEIGHTS---- MCL ----------	AR	
	A-1635-19	SCREW-ATTACH FOUR WEIGHTS ----MCL ----------	AR	
	A-1635-21	SCREW-ATTACH FIVE WEIGHTS ----MCL ----------	AR	
	A-1635-22	SCREW-ATTACH SIX WEIGHTS MCL ----------	AR	
		---*---		
- 5	D-2341/90M-2	BLADE ASSEMBLY-88 INCH DIA SEAPLANE-----MCL ----------	2	A
	D-2341/90M-8	BLADE ASSEMBLY-82 INCH DIA---- MCL ----------	2	B
- 6	A-1958	DECAL MCL ----------	1	
- 7	A-1636-6	RING-EXTERNAL RETAINING ----MCL ----------		
- 8	A-1633-13	PACKING-O RING-----MCL ----------	1	
- 9	A-1634-4	BALL-BEARING MCL ----------	22	
- 10	A-1742	SEPARATOR-BALL-----MCL ----------	22	
- 11	B-2289-1	SHIM-FERRULE 0.005 IN. MCL ----------	AR	
	B-2289-2	SHIM-FERRULE 0.010 IN. MCL ----------	AR	
	B-2289-3	SHIM-FERRULE 0.015 IN. MCL ----------	AR	
- 12	A-1883	WASHER-ACTUATING PIN MCL----------	1	
- 13	A-1882	PIN-BLADE ACTUATING-----MCL ----------	1	
- 14	B-1564	RING-RETENTION NUT LOCK MCL ----------	1	
- 15	A-1563-1	SHIM-BALANCING MCL ----------	2	
- 16	A-2356	DECAL-SPRING KIT INSTALLATION MCL ----------	2	
- 17	C-1904	CYLINDER MCL----------	1	
		ATTACHING PARTS	1	
- 18	A-1635-13	SCREW MCL ----------	8	
- 19	A-1638-9	WASHER-----MCL ----------	8	
- 20	A-1938	GASKET-CYLINDER MCL ----------	1	
		---*---		
- 21	B-1965	SUPPORT-SPACER MCL ----------	1	
- 22	A-1633-12	PACKING-O RING MCL ----------	1	
- 23	A-2351	WASHER-FIBER MCL ----------	1	
- 24	A-1636-7	RING-EXTERNAL RETAINING MCL ----------	2	
- 25	A-2108-278	SPACER-LOW PITCH STOP-----MCL LAND PLANE ----------	1	
	A-2108-135	SPACER-LOW PITCH STOP-----MCL SEAPLANE ----------	1	
- 26	A-2357	SPRING-LOW PITCH RETURN BOOST MCL ----------	1	
- 27	A-1552	WASHER-SPRING MCL----------	1	
- 28	B-2345	TUBE-PISTON ROD MCL ----------	1	
- 29	A-1633-9	PACKING-O RING MCL ----------	1	
	A-1934	PISTON ASSEMBLY MCL ----------	1	
- 30	A-1936	PIN-PISTON MCL ----------	2	
- 31	A-1935	LINK-BLADE ACTUATING MCL----------	2	
- 32	C-1939	PISTON-BLADE ACTUATING MCL ----------	1	
- 33	A-1937	SPACER-HIGH PITCH STOP MCL----------	1	
- 34	A-1633-9	PACKING-O RING MCL ----------	1	
	C-2343	HUB ASSEMBLY MCL ----------	1	
- 35	A-1561-2	BOLT-HUB MOUNTING MCL ----------	6	
	A-1561-4	BOLT-HUB MOUNTING 0.002 IN. OVERSIZE MCL---------	AR	
	A-1561-6	BOLT-HUB MOUNTING 0.004 IN. OVERSIZE MCL---------	AR	
- 36	A-2185	WASHER-FLANGE MCL ----------	3	
- 37	A-1562	DOWEL-HUB ALIGNMENT-----MCL ----------	2	
- 38	A-2230	DECAL-PROP INSTALLATION INSTRUCTIONS MCL ---------	1	

A---180 FLOATPLANE SERIAL 30000 & ON
B---180 SERIAL 30000 & ON
182 SERIAL 33000 & ON

NOTE. * FOR SUPPORTING PARTS OF MCCAULEY PROPELLERS 2A36C1/90M-8, 2A36C18/90M-8, & 2A36C1/90M-2, SEE FIGURE 135

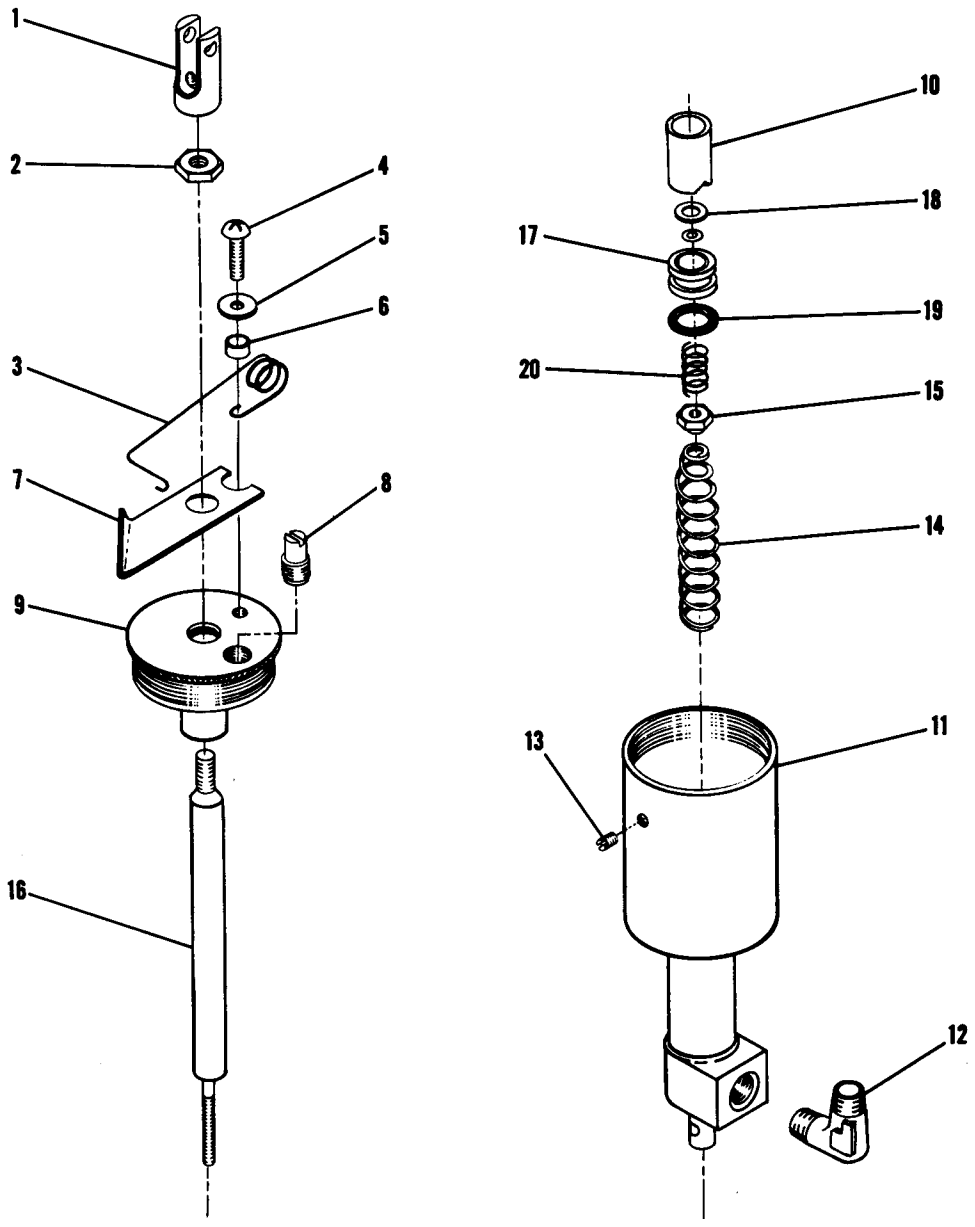

180-182 ALL SERIALS

Figure 137. Brake Master Cylinder Assembly

FIGURE AND INDEX NO.	PART NUMBER	DESCRIPTION 1 2 3 4 5 6 7	UNITS PER ASSY	USABLE ON CODE
137-	0541138-17	CYLINDER ASSEMBLY-BRAKE MASTER LH	1	A
	0541138-18	CYLINDER ASSEMBLY-BRAKE MASTER RH	1	A
	0541138-16	CYLINDER ASSEMBLY-BRAKE MASTER	1	B
- 1	0541140	CLEVIS-ROD END	1	
- 2	AN316-4R	NUT-CHECK	1	
- 3	0541145	SPRING-PARKING BRAKE	1	A
- 4	AN515-10R8	SCREW-MACHINE	1	
- 5	AN960-10	WASHER	1	A
- 6	0541146	SPACER	1	A
- 7	0541141-1	PLATE-LOCK LH	1	A
	0541141-2	PLATE-LOCK RH	1	A
- 8	0541139	PLUG-FILLER	1	
- 9	0541151	COVER-MASTER CYLINDER	1	
- 10	0541149	SLEEVE-PISTON ROD	1	
- 11	0541147-2	BODY-MASTER CYLINDER USED ON 0541138-16, -17, & -18 ONLY	1	
- 12	AN921-4D	ELBOW	1	
	902-4	GASKET	1	
	AN924-4D	NUT	1	
- 13	AN565D6-3	SCREW-SET	1	
- 14	0541148	SPRING-PISTON RETURN	1	
	0541138-5	PISTON ASSEMBLY-MASTER CYLINDER	1	
		ATTACHING PARTS		
- 15	MS20365-632C	NUT	1	
		---*---		
- 16	0541144	ROD-PISTON	1	
- 17	0541143	PISTON-MASTER CYLINDER	1	
- 18	200AC-6	LOCK-O-SEAL WERC	1	
- 19	AN6227B8	O RING	1	
- 20	0541148-1	SPRING-PISTON	1	

180-182 ALL SERIALS

A---180 SERIAL 30000 THRU 32661
182 SERIAL 33000 THRU 33842
B---180 SERIAL 32662 & ON
182 SERIAL 33843 & ON

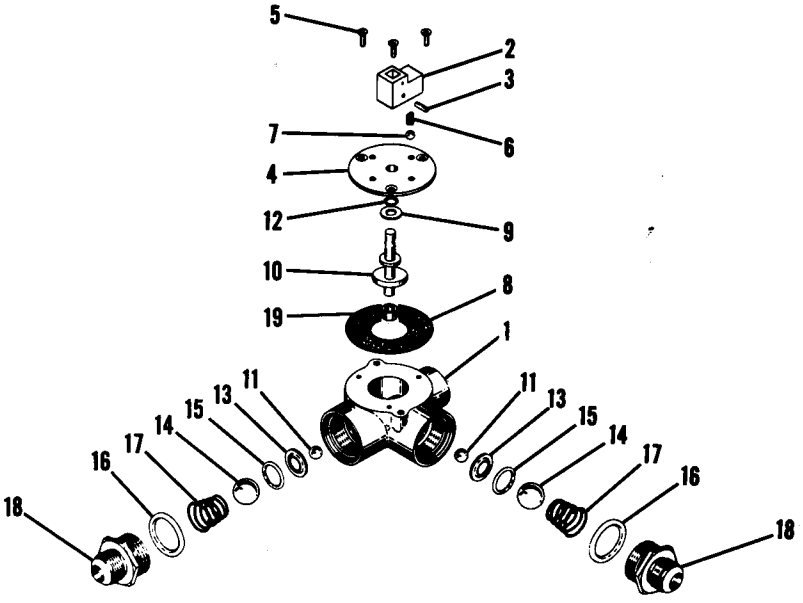

180-182 ALL SERIALS

Figure 138. Fuel Selector Valve Assembly

FIGURE AND INDEX NO.	PART NUMBER	DESCRIPTION 1 2 3 4 5 6 7	UNITS PER ASSY	USABLE ON CODE
138-	0311070-1	VALVE ASSEMBLY-FUEL SELECTOR----------	1	
- 1	0311071	BASE-FUEL VALVE ----------	1	
- 2	0513124-1	HOUSING ----------	1	
		ATTACHING PARTS		
- 3	NAS561P4-8	ROLLPIN EN ----------	1	
		---*---		
- 4	0311073	PLATE-FUEL VALVE----------	1	
		ATTACHING PARTS		
- 5	AN507-632R5	SCREW ----------	3	
		---*---		
- 6	0311070-2	SPRING-HANDLE LOCK ----------	1	
- 7	S-272-207	BALL-HANDLE LOCK-----CESSNA STANDARD ----------	1	
- 8	0311076	GASKET-VALVE PLATE ----------	1	
- 9	AN960C416L	WASHER----------	1	
- 10	0311072	CAM-FUEL VALVE ----------	1	
- 11	S-272-211	BALL-FUEL VALVE CESSNA STANDARD----------	2	
- 12	MS29513-10	O RING----------	1	
- 13	0311077	RETAINER-O RING ----------	2	
- 14	S-272-220	BALL-FUEL VALVE CESSNA STANDARD----------	2	
- 15	MS29513-112	O RING----------	2	
- 16	MS29513-116	O RING----------	2	
- 17	0311079	SPRING-FUEL VALVE ----------	2	
- 18	0311075-1	RETAINER-FUEL VALVE ----------	2	
- 19	S-1003-9A	BEARING CESSNA STANDARD ----------	1	

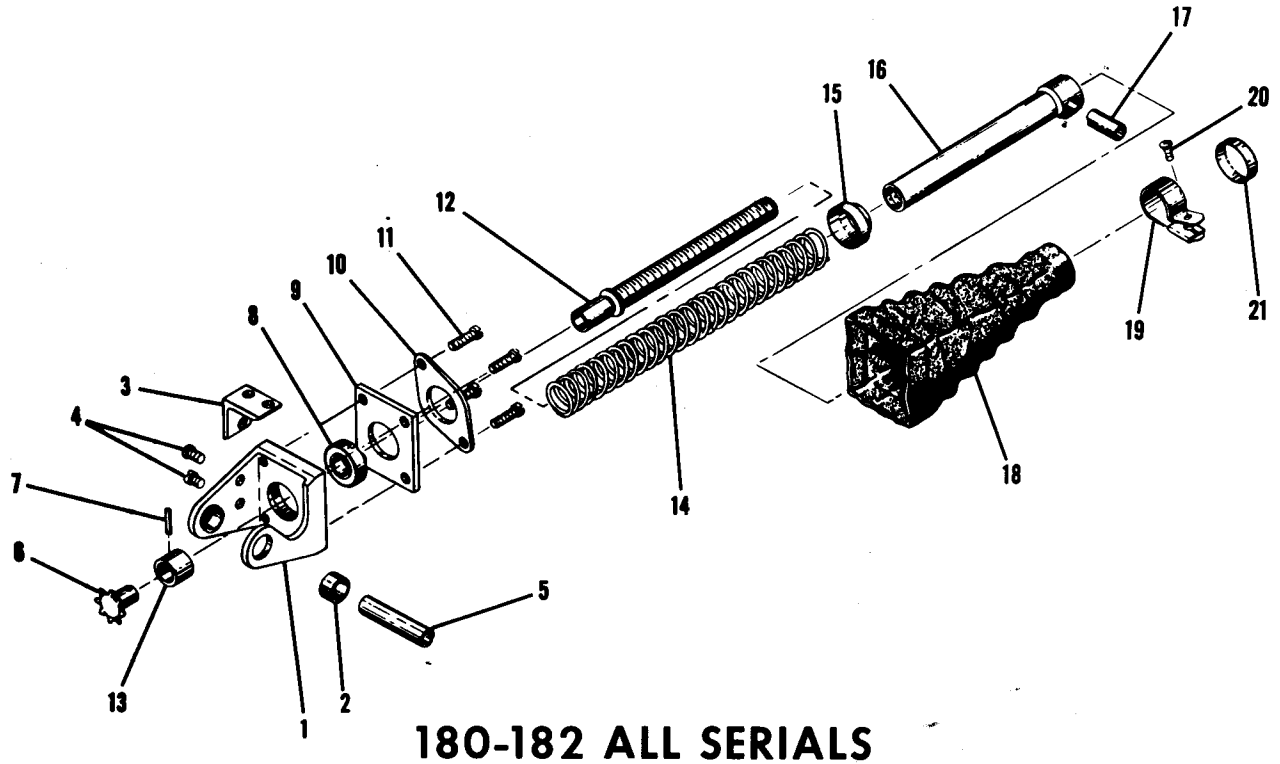

180-182 ALL SERIALS

Figure 139. Stabilizer Actuator Assembly

FIGURE AND INDEX NO.	PART NUMBER	DESCRIPTION 1 2 3 4 5 6 7	UNITS PER ASSY	USABLE ON CODE
139-	0712500-1	ACTUATOR ASSEMBLY-STABILIZER LH	1	
	0712500-2	ACTUATOR ASSEMBLY-STABILIZER RH	1	
- 1	0712500-5	HINGE ASSEMBLY-ACTUATOR LH	1	
	0712500-6	HINGE ASSEMBLY-ACTUATOR RH	1	
- 2	0712500-14	BUSHING	2	
- 3	0712500-8	GUARD-CABLE	1	
		ATTACHING PARTS		
- 4	AN500A8-4	SCREW	2	
		---*---		
- 5	0712500-10	BUSHING	1	
- 6	0310332	SPROCKET	1	
- 7	NAS561-3-8	ROLL PIN EN	1	
- 8	AN201KP6A	BEARING	1	
- 9	0712500-9	CAP	1	
- 10	0712500-16	PLATE	1	
		ATTACHING PARTS		
- 11	AN500A8-8	SCREW	4	
		---*---		
- 12	0712500-11	SCREW-BAR	1	
- 13	0712500-7	COLLAR-RETAINER	1	
- 14	0712501	SPRING-ACTUATOR	1	
- 15	0712500-17	COLLAR	1	
- 16	0712500-13	BARREL	1	
- 17	0712502	BUSHING-ECCENTRIC	1	
- 18	0712500-18	BOOT-ACTUATOR	1	
		ATTACHING PARTS		
- 19	A3053-14-27	CLAMP TIN	1	
- 20	S-1021Z-8-6	SCREW CESSNA STANDARD	1	
		---*---		
- 21	0712500-19	PLUG	1	

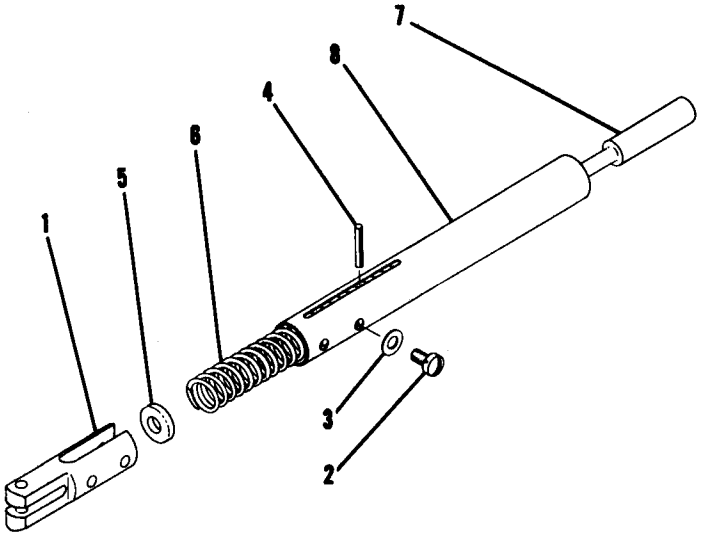

182 SERIAL 34754 & ON

Figure 140. Bungee Assembly

FIGURE AND INDEX NO.	PART NUMBER	DESCRIPTION 1 2 3 4 5 6 7	UNITS PER ASSY	USABLE ON CODE
140-	0713096-1	BUNGEE ASSEMBLY	1	A
- 1	0713081-1	CLEVIS	1	
		ATTACHING PARTS		
- 2	AN502-10-4	SCREW	4	
- 3	AN960-10L	WASHER	AR	
		---*---		
- 4	NAS561-3-16	ROLLPIN EN	1	
- 5	0713080-1	RETAINER	2	
- 6	0713084-1	SPRING	1	
- 7	0713085-1	ROD	1	
- 8	0713082-1	TUBE	1	
		A---182 SERIAL 34754 & ON		

FIGURE AND INDEX NO.	PART NUMBER	DESCRIPTION 1 2 3 4 5 6 7	UNITS PER ASSY	USABLE ON CODE
141-	0311779-2	HEATER-MODEL 979-B-1 SW G-485200	1	A
- 1	G-486157	VALVE ASSEMBLY-FUEL CONTROL SW	1	
- 2	G-485010	SWITCH ASSEMBLY-OVERHEAT SW	1	
		ATTACHING PARTS		
- 3	83624	SCREW SW	2	
		---*---		
- 4	G-486161	SWITCH ASSEMBLY-FLAME-----SW	1	
- 5	G-485269	GUARD ASSEMBLY-FLAME SW	1	
		ATTACHING PARTS		
- 6	83624	SCREW SW	4	
		---*---		
- 7	G-484865	EXCHANGER ASSEMBLY SW	1	
- 8	G-484907	HOUSING ASSEMBLY-----SW	1	
		ATTACHING PARTS		
- 9	85040	SCREW SW	3	
		---*---		
- 10	G-475935	RESISTOR SW	1	
		ATTACHING PARTS		
- 11	7228	NUT SW	6	
		---*---		
- 12	G-474942	IGNITER ASSEMBLY-----SW	1	
- 13	485037	SHIELD-BLOWER SW	1	
		ATTACHING PARTS		
- 14	475005	LOCKWASHER SW	1	
- 15	475768	SCREW SW	1	
		---*---		
- 16	475939	RELAY SW	1	
		ATTACHING PARTS		
- 17	45569	NUT SW	1	
- 18	61086	LOCKWASHER SW	1	
		---*---		
- 19	475067	GASKET-IGNITER SW	1	
- 20	474924	ELBOW-FUEL AIR SW	1	
- 21	G-485016	HOUSING ASSEMBLY-BRACKET SW	1	
		ATTACHING PARTS		
- 22	17093	SCREW SW	3	
- 23	77856	WASHER-----SW	3	
		---*---		
- 24	G-485210	MOTOR ASSEMBLY SW	1	
		ATTACHING PARTS		
- 25	476226	WASHER-RUBBER SW	2	
- 26	474945	WASHER-----SW	2	
- 27	12349	NUT SW	2	
		---*---		
- 28	475318	ELBOW SW	1	
- 29	484230	ELBOW SW	1	
- 30	474948	CABLE-KNIT SW	3	
- 31	476227	SPACER-----SW	1	
- 32	484921	SPACER-CENTERING-----SW	2	
- 33	474932	CLAMP-HOSE SW	1	
- 34	474931	HOSE SW	1	
- 35	G-484046	WHEEL-BLOWER SW	1	
		ATTACHING PARTS		
- 36	471036	SCREW-CUP POINT SW	1	
		---*---		

180 ALL SERIALS

CONTINUED ON PAGES 370 & 371

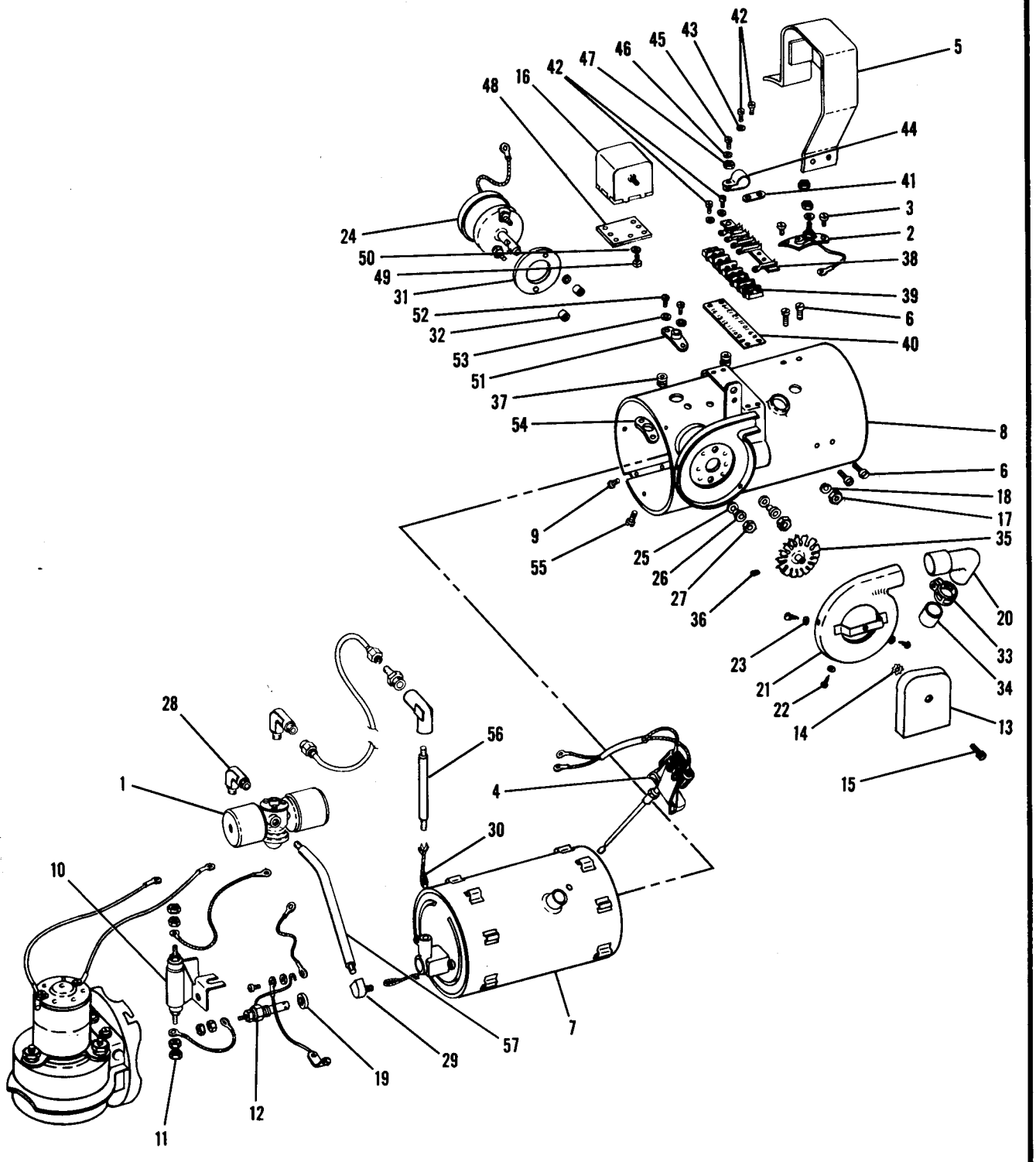

180 ALL SERIALS

Figure 141. Stewart Warner Heater Assembly

FIGURE AND INDEX NO.	PART NUMBER	DESCRIPTION 1 2 3 4 5 6 7	UNITS PER ASSY	USABLE ON CODE
141- 37	475127	GROMMET SW	2	
- 38	484955	CONNECTING STRIP-----SW	1	
- 39	484140	STRIP-TERMINAL SW	1	
- 40	484857	STRIP-DOUBLE MARKER SW	1	
- 41	485152	JUMPER-----SW	1	
		ATTACHING PARTS		
- 42	76694	SCREW SW	4	
- 43	79404	WASHER-----SW	3	
		---*---		
- 44	484986	CLAMP-CABLE-----SW	1	
		ATTACHING PARTS		
- 45	77863	SCREW SW	1	
- 46	79372	LOCKWASHER SW	1	
- 47	76784	NUT SW	1	
		---*---		
- 48	475928	INSULATOR-RELAY SW	1	
		ATTACHING PARTS		
- 49	12439	SCREW SW	7	
- 50	43036	LOCKWASHER SW	7	
		---*---		
- 51	474910	FLANGE-----SW	1	
		ATTACHING PARTS		
- 52	79003	SCREW SW	2	
- 53	79404	WASHER-----SW	2	
		---*---		
- 54	484121	PLATE-TAPPING SW	1	
- 55	83624	SCREW SW	3	
- 56	0511231-4	STAND PIPE SEE FIGURE 86	1	
- 57	0511231-5	DRIP PIPE SEE FIGURE 86	1	

A---180 SERIAL 30000 & ON
NOTE. FOR ACCESSORY KIT LISTINGS REFER TO PAGES 372 THRU 374B

AK No.	DESIGNATION	MODEL	SERIALS
175-35	Abrasion Boots - Stabilizer	180 182	30000 & on 33000 & on
180-42	Auxiliary Seat	180	18051064 & on
180-29	Camera - (Centerline)	180	30973 & on
182-47	Carburetor Air Temperature System	180 182	30000 & on 33000 & on
175-9	Cargo Tie Down	180 182	30000 & on 33000 & on
182-82	Courtesy Light Installation (Set of 2)	180	18051064 & on
8053-7	Crosswind Wheel	180	30000 & on
180-8	Dual Controls	180	32151 thru 50355
180-28	Dual Controls	180	50356 thru 50641
180-36	Dual Controls	180	50642 & on
182-1	Dual Controls	182	33000 thru 34753
182-19	Dual Controls (Skylane)	182	34754 thru 51556
182-20	Dual Controls	182	34754 thru 51556
182-24	Dual Controls	182	51557 thru 52334
182-25	Dual Controls	182	51557 thru 52334
182-50	Dual Controls	182	52335 thru 18253598
182-51	Dual Controls (Skylane)	182	52335 thru 18253598
180-43	Dual Controls (Utility)	180	18051064 & on
180-44	Dual Controls (De Luxe)	180	18051064 & on
180-1	Floatplane/and or Amphibian Kit	180	30000 thru 50661
180-39	Floatplane/and or Amphibian Kit	180	50662 & on
8054-2	Flares 3 1-1/2 Minute	180	30640 thru 50661

AK No.	DESIGNATION	MODEL	SERIALS
180-6	Generator - 50 AMP	180	30000 thru 50911 33000 thru 53007
8053-2	Ground Service Plug (Front Mounted)	180 182	30000 thru 50676 50892 thru 18051063 33000 thru 52747 52982 thru 18253598
182-52	Ground Service Plug (Aft Mounted)	180	50677 thru 50891 52748 thru 52981
180-40	Ground Service Plug	180 182	18051023 thru 18051183 18253363 thru 18253598
185-21	Gyros (Remanufactured to Pictorial)	180	18051064 & on
210-13	Headrest - (Front Seat)	180 182	50662 & on 52359 & on
210-21	Headrest - (Rear Seat)	180 182	50662 & on 52359 & on
8054-4	Heater - (Stewart Warner)	180	30000 thru 32150
175-12	Hoisting Provisions	180 182	30000 & on 33000 & on
182-14	Navigation Light Flasher	180 182	30000 thru 50355 33000 thru 51556
175-24	Navigation Light Flasher	180 182	50356 thru 50580 51557 thru 52294
175-40	Navigation Light Flasher	180 182	50581 thru 51063 52295 thru 53598
175-58	Navigation Light Flasher (Includes Detector)	180	18051064 & on
180-10	Oil Cooler - Large	180 182	32151 thru 50355 33000 thru 51556
182-41	Oil Cooler - Large	180 182	50356 & on 51557 thru 18253598
182-28	Oil Dilution System	180 182	30000 & on 33000 thru 18253598
182-48	Oil Filter - Winslow	180 182	30000 & on 33000 thru 18253598
180-4	Oxygen System	180 182	30000 thru 50661 33000 thru 52358

AK No.	DESIGNATION	MODEL	SERIALS
182-54	Oxygen System	180 182	50662 thru 18051063 52359 thru 18253598
185-19	Oxygen System	180	18051064 & on
182-57	Pitot - (Heated)	180 182	30000 & on 33000 thru 18253598
8055-4	Primer System (6-Line)	180	30000 thru 32661 & 50220 & on 33000 thru 33842 & 51083 & on
180-23	Primer System (5-Line)	180 182	32662 thru 50219 33843 thru 51037
175-33	Rear Seat Air Vent	180 182	50356 thru 51063 51557 thru 53578
182-21	Rotating Beacon	180 182	30000 thru 50355 33000 thru 51556
182-35	Rotating Beacon	180 182	50356 & on 51557 thru 52358
210-5	Rotating Beacon	182	52359 thru 18253598
180-20	Shoulder Harness	180 182	30000 & on 33000 thru 18253598
8055-5	Ski Axle (Clamp on Type)	180	30000 & on
182-65	Speed Fairing	182	33000 thru 53007
172-52	Stretcher - Installation	180 182	30000 & on 33000 & on
182-37	Strut Fairing	180 182	50356 & on 51557 thru 18253598
8055-1	Sun Visor	180 182	31261 thru 50355 33000 thru 51682
182-22	Sun Visor	180 182	50356 thru 50661 51557 thru 52358
182-58	Sun Visor	180 182	50662 & on 52359 & on

AK No.	DESIGNATION	MODEL	SERIALS
182-42	Tactair T-2	180 182	30000 thru 50996 33000 thru 53290
8053-3	Vacuum System - Engine Driven (With Panel Less Instruments)	180 182	30000 thru 32661 33000 thru 33842
8053-4	Vacuum System - Engine Driven (Less Panel & Instruments)	180 182	30000 thru 32661 33000 thru 33842
8053-5	Vacuum System - Engine Driven (Hardware Only)	180 182	30000 thru 32661 33000 thru 33842
180-22	Vacuum System - Engine Driven (Hardware Only)	180 182	32662 thru 50355 33843 thru 51556
180-21	Vacuum System - Engine Driven (Less Gyros)	180 182	32662 thru 50355 33843 thru 51556
180-26	Vacuum System - Engine Driven (Remanufactured)	180 182	32662 thru 50355 33843 thru 51556
180-27	Vacuum System - Engine Driven (New)	180 182	32662 thru 50355 33843 thru 51556
182-31	Vacuum System - (New Instruments)	180 182	50356 thru 50661 51557 thru 52358
182-55	Vacuum System - (New Instruments)	180 182	50662 thru 18051063 52359 thru 18253598
182-32	Vacuum System - (Remanufactured Instruments)	180 182	50356 thru 50661 51557 thru 52358
180-46	Vacuum System - Pictorial Gyros	180	18051064 & on
182-56	Vacuum System (Remanufactured Instruments)	180 182	50662 & on 53259 thru 18253598
182-45	Vacuum System (Less Gyros)	180 182	50356 thru 50661 51557 thru 52358
182-59	Vacuum System (Less Gyros)	180 182	50662 & on 52359 thru 18253598
182-40	Vacuum System (Partial)	180 182	30000 thru 18050996 33000 thru 18253290

AK No.	DESIGNATION	MODEL	SERIALS
180-17	Winterization (Standard Oil Cooler)	180	30000 thru 32150
180-16	Winterization (Standard Oil Cooler)	180	32151 thru 32661
180-19	Winterization (Large Oil Cooler)	180	31177 thru 32150
180-18	Winterization (Large Oil Cooler)	180	32151 thru 32661
180-34	Winterization	180	32662 thru 50661
182-64	Winterization	180 182	50662 & on 51557 & on

NUMERICAL INDEX

PART NUMBER	FIGURE AND INDEX NO.
•375X3/4	134- 22
•501	134- 12
A-1075	120- 45
A-1075	120B- 40
A-1104	1- 44
A-1105	120B- 4
A-1105	120C- 4
A-1106	120B- 4
A-1106	120C- 4
A-1108	120B- 4
A-1108	120C- 4
A-114-C	134- 4
A-114-F	134- 41
A-116-A	134- 5
A-1213	120B- 11
A-1213	120C- 11
A-1257A	1- 42
A-1257A	1A- 35
A-1272	120A- 76
A-1280-2	1- 43
A-1280-2	1A- 36
A-1280-3	1- 43
A-1280-3	1A- 36
A-1396	120A- 81
A-14-A	134- 7
A-14-B	134- 7
A-1552	135- 36
A-1552	136- 27
A-1553	135- 49
A-1561-2	135- 3
A-1561-2	136- 35
A-1561-2	72- 15
A-1561-4	136- 35
A-1561-6	136- 35
A-1562	135- 4
A-1562	136- 37
A-1562	72- 16
A-1563-1	135- 54
A-1563-1	136- 15
A-158L	134- 1
A-1580	135- 11
A-159N	134- 8
A-1598	135- 24
A-1599	135- 55
A-1609	135- 30
A-1610	135- 34
A-1614-5	135- 43
A-1617	135- 48
A-1632-2	135- 42
A-1633-1	135- 37
A-1633-12	136- 22
A-1633-13	136- 8
A-1633-3	135- 5
A-1633-3	136- 2
A-1633-4	135- 26
A-1633-5	135- 23
A-1633-6	135- 28
A-1633-8	135- 52
A-1633-9	136- 29
A-1633-9	136- 34
A-1634-1	135- 20
A-1634-2	135- 20
A-1634-4	135- 14
A-1634-4	136- 9
A-1635-1	135- 9
A-1635-13	136- 18
A-1635-16	136- 4
A-1635-17	136- 4
A-1635-18	136- 4
A-1635-19	136- 4
A-1635-2	135- 25
A-1635-2	135- 56
A-1635-21	136- 4
A-1635-22	136- 4
A-1635-3	135- 25

PART NUMBER	FIGURE AND INDEX NO.
A-1635-3	135- 56
A-1635-4	135- 56
A-1635-5	135- 56
A-1635-6	135- 40
A-1636-1	135- 35
A-1636-2	135- 27
A-1636-3	135- 50
A-1636-6	136- 7
A-1636-7	136- 24
A-1638-1	135- 31
A-1638-3	135- 45
A-1638-9	136- 19
A-1639-1	135- 33
A-1639-2	136- 1
A-1641-1	135- 39
A-1742	135- 15
A-1742	136- 10
A-1748	120C- 69
A-1750-1	135- 32
A-1882	135- 8
A-1882	136- 13
A-1883	135- 10
A-1883	136- 12
A-1934	136- 29
A-1935	136- 31
A-1936	136- 30
A-1937	136- 33
A-1938	136- 20
A-1958	136- 6
A-1977	135- 21
A-1998	135- 48
A-1999	135- 46
A-2104	136- 3
A-2108-135	136- 25
A-2108-278	136- 25
A-2185	136- 36
A-2230	136- 38
A-2351	136- 23
A-2356	136- 16
A-2357	136- 26
A-282	134- 20
A-285	134- 33
A-289	120- 45
A-289	120B- 40
A-295	134- 32
A-2981A-6-27	96A- 4A
A-3046A-4-92	1A- 41
A-3046A-6	2A- 3
A-307-10-0033	34- 17
A-36	63- 8
A-400	120- 45
A-400	120B- 40
A-427	120- 51
A-427	120- 52
A-427	120A- 84
A-427	120B- 46
A-427	120B- 47
A-427	120C- 77
A-47-1	134- 28
A-48	134- 29
A-482	120A- 4
A-482	120A- 10
A-482	120B- 12
A-482	120B- 33
A-482	120C- 12
A-482	120C- 44
A-6162-8Z-3	3A- 32
A-628	120- 50
A-628	120- 52
A-628	120B- 45
A-628	120B- 47
A-65	134- 26
A-654-5	120A- 23
A-654-5	120A- 43
A-654-6	120A- 24

PART NUMBER	FIGURE AND INDEX NO.
A-654-6	120A- 44
A-7512-12	1A- 34
A-7632	113- 6
A-7634	113- 3
A-7635	113- 4
A-7942	113- 5
A-810	134- 35
A-821-1	134- 42
A-826-1	134- 40
A-827-1	134- 43
A-862	134- 39
A-911	120B- 8
A-911	120C- 8
A-928	120- 47
A-928	120- 52
A-928	120B- 42
A-928	120B- 47
A-95-A	134- 31
A-953	120B- 66
A-969	134- 8
A-971	134- 9
A-972	134- 10
A-974	134- 11
A-978	120- 19
A-978	120- 62
A-978	120A- 63
A-978	120A- 67
A-978	120A- 68
A-978	120A- 89
A-978	120A- 93
A-978	120A- 94
A-978	120B- 27
A-978	120C- 27
A-979	120- 16
A-979	120A- 18
A-979	120A- 58
A-979	120A- 60
A-979	120B- 25
A-979	120B- 71
A-98-B	134- 32
A-998	120- 45
A-998	120B- 40
AK172-52	PAGE 374
AK175-12	373
AK175-24	373
AK175-33	374
AK175-35	372
AK175-40	373
AK175-58	373
AK175-9	372
AK180-1	372
AK180-10	373
AK180-16	374
AK180-17	374
AK180-18	374
AK180-19	374
AK180-20	374
AK180-21	374
AK180-22	374
AK180-23	374
AK180-26	374
AK180-27	374
AK180-28	372
AK180-29	372
AK180-34	374
AK180-36	372
AK180-39	372
AK180-4	373
AK180-40	373
AK180-42	372
AK180-43	372
AK180-44	372
AK180-46	374
AK180-6	373
AK180-8	PAGE 372

PART NUMBER	FIGURE AND INDEX NO.
AK182-1	PAGE 372
AK182-14	373
AK182-19	372
AK182-20	372
AK182-21	374
AK182-22	374
AK182-24	372
AK182-25	372
AK182-28	373
AK182-31	374
AK182-32	374
AK182-35	374
AK182-37	374
AK182-40	374
AK182-41	373
AK182-42	374
AK182-45	374
AK182-47	372
AK182-48	373
AK182-50	372
AK182-51	372
AK182-52	373
AK182-54	374
AK182-55	374
AK182-56	374
AK182-57	374
AK182-58	374
AK182-59	374
AK182-64	374
AK182-65	374
AK182-82	372
AK185-19	374
AK185-21	373
AK210-13	373
AK210-21	373
AK210-5	374
AK8053-2	373
AK8053-3	374
AK8053-4	374
AK8053-5	374
AK8053-7	372
AK8054-2	372
AK8054-4	373
AK8055-1	374
AK8055-4	374
AK8055-5	PAGE 374
AN115809	135- 56
AN122697	6A- 38
AN155B-16S	109- 74
AN155B-32L	107- 54
AN155B-32S	104- 2
AN155B-32S	105- 3
AN155B-32S	106- 3
AN155B-32S	106- 21
AN155B-32S	107- 9
AN155B-32S	108- 26
AN155B-32S	110- 21
AN161-22RS	105- 4
AN161-22RS	106- 4
AN161-22S	106- 22
AN161-32LL	107- 55
AN161-32RS	104- 3
AN165-22RS	108- 25
AN175-16	41- 47
AN200KP4	13- 36
AN200KP4	103- 18
AN200KS4	106- 30
AN201KP6A	139- 8
AN21-13	107- 7
AN210-1B	120- 83
AN227-6	57A- 8
AN227-7	57A- 8
AN23-10	104- 4
AN23-10	105- 5
AN23-10	106- 5

PART NUMBER	FIGURE AND INDEX NO.
AN23-10	108- 10
AN23-10	121- 39
AN23-10A	108- 13
AN23-11	105- 8
AN23-11	105- 15
AN23-11	106- 23
AN23-11	122- 60
AN23-11	123- 58
AN23-12	40- 17
AN23-12	40A- 17
AN23-12	109- 8
AN23-12	109- 11
AN23-16	109- 13
AN23-16	109- 17
AN23-17	40- 15
AN23-17	40A- 15
AN23-23A	90- 7
AN23-9	109- 3
AN24-12	104- 7
AN24-12	105- 12
AN24-13	108- 32
AN24-15A	121- 35
AN24-28A	56B- 4
AN24-29A	56A- 3
AN2552-3	111B- 1
AN2552-3A	111A- 1
AN2982A-12-27	95-19A
AN3-10A	40- 29
AN3-10A	40A- 29
AN3-10A	8- 14
AN3-10A	57- 2
AN3-10A	89- 29
AN3-10A	89- 47
AN3-10A	103- 13
AN3-10A	103- 20
AN3-10A	106- 27
AN3-10A	109- 31
AN3-10A	110- 25
AN3-10A	126- 17
AN3-11A	54- 40
AN3-11A	55- 33
AN3-11A	8- 9
AN3-11A	56- 32
AN3-11A	56A- 33
AN3-11A	56B- 58
AN3-11A	57- 1
AN3-11A	74- 26
AN3-11A	89- 9
AN3-11A	89- 43
AN3-11A	103- 7
AN3-12	82- 6
AN3-12A	73- 27
AN3-12A	110- 16
AN3-13A	87- 42
AN3-13A	88- 47
AN3-13A	91- 6
AN3-14A	89- 21
AN3-15A	93- 5
AN3-15A	94- 4
AN3-15A	95- 4
AN3-15A	120D- 4
AN3-16A	91- 22
AN3-20A	23- 4
AN3-20A	24- 2
AN3-20A	25- 4
AN3-20A	26- 15
AN3-21A	23- 7
AN3-21A	24- 5
AN3-21A	107- 43
AN3-24A	79- 42
AN3-24A	80- 2
AN3-3A	35- 9
AN3-3A	35- 12
AN3-3A	36- 6
AN3-3A	43- 14

PART NUMBER	FIGURE AND INDEX NO.
AN3-3A	44- 12
AN3-3A	45- 14
AN3-3A	46- 12
AN3-3A	46A- 14
AN3-3A	52- 8
AN3-3A	57A- 22
AN3-3A	67- 3
AN3-3A	67- 28
AN3-3A	68- 3
AN3-3A	68- 25
AN3-3A	73- 42
AN3-3A	74- 15
AN3-3A	74- 44
AN3-3A	78- 2
AN3-3A	78- 20
AN3-3A	87- 28
AN3-3A	88- 30
AN3-3A	98- 13
AN3-3A	98- 19
AN3-3A	98- 27
AN3-3A	111- 12
AN3-3A	120- 69
AN3-3A	120A- 88
AN3-3A	120A- 92
AN3-3A	120A- 96
AN3-3A	120A-104
AN3-3A	120C- 83
AN3-3A	121- 30
AN3-37A	75- 56
AN3-37A	78- 16
AN3-4A	14- 20
AN3-4A	15- 19
AN3-4A	23- 64
AN3-4A	24- 34
AN3-4A	35- 29
AN3-4A	54- 31
AN3-4A	55- 25
AN3-4A	8- 33
AN3-4A	57A- 2
AN3-4A	76- 75
AN3-4A	81- 25
AN3-4A	81A- 27
AN3-4A	82- 19
AN3-4A	83- 18
AN3-4A	83- 24
AN3-4A	89- 17
AN3-4A	101- 14
AN3-4A	106- 32
AN3-4A	108- 40
AN3-4A	120- 40
AN3-4A	120- 52
AN3-4A	120- 54
AN3-4A	120A-100
AN3-4A	120B- 35
AN3-4A	120B- 47
AN3-4A	120B- 49
AN3-4A	120D- 21
AN3-4A	121- 17
AN3-4A	121- 48
AN3-4A	122- 19
AN3-4A	123- 14
AN3-5A	12- 10
AN3-5A	21- 36
AN3-5A	22- 35
AN3-5A	23- 60
AN3-5A	23- 72
AN3-5A	24- 39
AN3-5A	35- 34
AN3-5A	36- 25
AN3-5A	54- 3
AN3-5A	54- 27
AN3-5A	55- 21
AN3-5A	73- 25
AN3-5A	74- 24
AN3-5A	79- 41

PART NUMBER	FIGURE AND INDEX NO.
AN3-5A	80- 8
AN3-5A	86- 23
AN3-5A	87- 28
AN3-5A	87- 47
AN3-5A	88- 30
AN3-5A	88- 52
AN3-5A	99- 12
AN3-6	73- 47
AN3-6A	8- 8
AN3-6A	73- 35
AN3-6A	74- 32
AN3-6A	87- 28
AN3-6A	87- 32
AN3-6A	88- 30
AN3-6A	88- 36
AN3-6A	98- 13
AN3-6A	108- 43
AN3-6A	108- 47
AN3-6A	109- 21
AN3-6A	109- 26
AN3-6A	109- 36
AN3-6A	110- 31
AN3-6A	111- 39
AN3-6A	120- 80
AN3-6A	120- 84
AN3-6A	120A- 81
AN3-6A	120C- 74
AN3-60A	76- 58
AN3-60A	77- 62
AN3-60A	79- 44
AN3-60A	79- 44
AN3-60A	80- 42
AN3-62A	126- 68
AN3-66A	78- 13
AN3-66A	79- 43
AN3-66A	80- 39
AN3-67A	80- 39
AN3-7A	7- 10
AN3-7A	107- 56
AN3-7A	109- 41
AN3-7A	121- 48
AN3-7A	122- 48
AN3-7A	123- 47
AN310-3	41- 73
AN310-3	41A- 37
AN310-3	82- 9
AN310-3	104- 5
AN310-3	105- 6
AN310-3	105- 9
AN310-3	105- 16
AN310-3	106- 6
AN310-3	106- 23
AN310-3	108- 11
AN310-3	109- 4
AN310-3	109- 9
AN310-3	109- 11
AN310-3	109- 14
AN310-3	109- 18
AN310-3	122- 60
AN310-3	123- 58
AN310-4	40A- 46
AN310-4	41- 67
AN310-4	41- 79
AN310-4	41A- 31
AN310-4	41A- 43
AN310-4	91- 19
AN310-4	104- 8
AN310-4	105- 13
AN310-4	108- 33
AN310-5	40- 9
AN310-5	40- 10
AN310-5	40A- 9
AN310-5	40A- 10
AN310-5	41- 51
AN310-6	41- 39

PART NUMBER	FIGURE AND INDEX NO.
AN310-6	41- 57
AN310-8	133- 25
AN315-3R	73- 22
AN315-3R	74- 22
AN315-3R	87- 50
AN315-3R	88- 54
AN315-3R	91- 13
AN315-4R	90- 11
AN316-4	91- 4
AN316-4	91- 13
AN316-4R	7- 13
AN316-4R	8- 13
AN316-4R	137- 2
AN316-6R	40- 28
AN316-6R	40- 33
AN316-6R	40A- 28
AN316-6R	40A- 33
AN320-1	107- 7
AN320-3	40- 19
AN320-3	40A- 19
AN320-3	73- 49
AN320-3	121- 40
AN320-8	133- 4
AN340-B6	63A- 25
AN340-416	106- 34
AN340-8	63A- 52
AN340B6	63A- 71
AN340B6	63A- 72
AN340B8	61- 6
AN340B8	63- 56
AN340B8	63A- 56
AN345-10	56A- 40
AN350-1032	125- 10
AN366-632	126- 51
AN381-2-12	120A- 82
AN381-2-12	120C- 75
AN4-10A	33- 17
AN4-10A	11- 3
AN4-10A	104- 15
AN4-10A	104- 19
AN4-10A	105- 23
AN4-10A	105- 26
AN4-10A	105- 29
AN4-10A	106- 13
AN4-10A	106- 16
AN4-10A	107- 31
AN4-10A	107- 52
AN4-10A	108- 2
AN4-10A	108- 5
AN4-10A	108- 16
AN4-10A	108- 36
AN4-10A	126- 37
AN4-10A	126- 38
AN4-11A	12- 1
AN4-11A	12A- 1
AN4-11A	13- 1
AN4-11A	13- 33
AN4-11A	38- 5
AN4-11A	41- 43
AN4-11A	57- 10
AN4-11A	57- 23
AN4-11A	73- 29
AN4-11A	74- 36
AN4-11A	120- 48
AN4-11A	120- 52
AN4-11A	120B- 43
AN4-11A	120B- 47
AN4-12A	12- 4
AN4-12A	35- 17
AN4-12A	36- 10
AN4-12A	54- 3
AN4-12A	108- 27
AN4-12A	121- 5
AN4-12A	122- 7
AN4-12A	123- 8

PART NUMBER	FIGURE AND INDEX NO.
AN4-13A	55- 4
AN4-13A	56- 3
AN4-13A	100- 5
AN4-13A	129- 13
AN4-14A	35- 21
AN4-14A	36- 14
AN4-14A	56B- 40
AN4-14A	104- 11
AN4-14A	105- 19
AN4-14A	106- 9
AN4-14A	107- 27
AN4-14A	108- 21
AN4-14A	130- 3
AN4-15A	11- 1
AN4-15A	110- 34
AN4-16A	107- 40
AN4-20A	110- 34
AN4-21A	107- 21
AN4-21A	107- 34
AN4-21A	109- 47
AN4-3A	99- 27
AN4-30A	73- 29
AN4-31	41- 64
AN4-31	41- 76
AN4-31	41A- 28
AN4-31	41A- 40
AN4-31A	103- 2
AN4-31A	130A- 9
AN4-32	40A- 44
AN4-33A	107- 16
AN4-35A	74- 36
AN4-4A	82- 15
AN4-4A	111- 10
AN4-42A	7- 2
AN4-45A	132- 13
AN4-47A	129- 2
AN4-5	91- 17
AN4-5A	57- 24
AN4-5A	99A- 13
AN4-5A	124- 2
AN4-5A	124A- 2
AN4-6A	54- 35
AN4-6A	55- 29
AN4-6A	57- 3
AN4-6A	57A- 18
AN4-6A	111- 7
AN4-6A	111- 15
AN4-6A	122- 56
AN4-6A	123- 55
AN4-60A	8- 2
AN4-62A	109- 54
AN4-62A	109- 69
AN4-7A	13- 34
AN4-7A	126- 32
AN4H-4A	72- 9
AN4H5A	72- 6
AN4022-1	75- 47
AN4022-1	76- 45
AN4022-1	77- 53
AN4022-1	102- 1
AN4022-1	102- 2
AN4022-1	102- 2
AN4022-1	102- 4
AN4022-1	102- 6
AN4050-1	120D- 1
AN4078-1	99- 10
AN415-2	34- 8
AN415A	66- 5
AN44-4A	126- 14
AN44-4A	126- 18
AN44-4A	126- 27
AN486-2	90- 12
AN486-4	90- 16
AN486-4	91- 12
AN5-11A	40- 24

PART NUMBER	FIGURE AND INDEX NO.
AN5-11A	40A- 24
AN5-11A	126- 13
AN5-11A	126- 23
AN5-11A	126- 37
AN5-13A	121- 12
AN5-14A	102- 15
AN5-15A	23- 54
AN5-15A	122- 14
AN5-15A	123- 17
AN5-21A	42- 12
AN5-21A	42- 17
AN5-23A	39- 32
AN5-25A	38- 21
AN5-25A	38- 62
AN5-25A	39- 32
AN5-26A	42- 16
AN5-27A	41- 7
AN5-30A	41- 4
AN5-30A	41A- 3
AN5-31A	40- 22
AN5-31A	40A- 22
AN5-32A	121- 8
AN5-32A	122- 10
AN5-32A	123- 11
AN5-33A	41A- 3
AN5-33A	41- 4
AN5-34A	40- 36
AN5-37A	40- 36
AN5-43A	40- 45
AN5-43A	41- 7
AN5-47	40- 6
AN5-47	40A- 6
AN5-47A	40A- 36
AN5-51A	40A- 36
AN5-5A	10A- 7
AN5-6A	23- 88
AN5-6A	10- 17
AN5-6A	10A- 1
AN5-7A	23- 55
AN5-7A	23- 90
AN5-7A	4- 12
AN5-7A	10- 4
AN5H12	38- 43
AN500A4-4	120- 51
AN500A4-4	120- 52
AN500A4-4	120- 74
AN500A4-4	120A- 84
AN500A4-4	120A- 98
AN500A4-4	120B- 46
AN500A4-4	120B- 47
AN500A4-4	120C- 77
AN500A8-4	139- 4
AN500A8-5	87- 24
AN500A8-5	88- 24
AN500A8-7	6- 25
AN500A8-7	6A- 24
AN500A8-8	139- 11
AN500C4-7	120B- 2
AN500C4-7	120C- 2
AN501A10-	134- 30
AN502-10-4	140- 2
AN502-10-6	129- 41
AN502-416-10	6- 15
AN503-6-8	41- 18
AN503-6-8	41A- 11
AN503-8-10	128A- 23
AN503-8-10	128A- 40
AN505-6-4	133- 35
AN505-6-4	133- 39
AN505-8R5	129- 40
AN505-8R5	132- 50
AN507-1032R10	39- 28
AN507-1032R12	44- 3
AN507-1032R12	46- 3
AN507-1032R12	46A- 2

PART NUMBER	FIGURE AND INDEX NO.
AN507-1032R12	91- 28
AN507-1032R14	65- 16
AN507-1032R8	38- 40
AN507-1032R8	43- 2
AN507-1032R8	44- 3
AN507-1032R8	45- 2
AN507-1032R8	46- 3
AN507-1032R8	122- 71
AN507-36R12	60- 60
AN507-428R7	6- 52
AN507-428R7	6A- 36
AN507-428R7	6A- 43
AN507-440-5	120B- 5
AN507-440-5	120B- 7
AN507-440-5	120C- 5
AN507-440-5	120C- 7
AN507-632R10	126- 3
AN507-632R12	1- 45
AN507-632R12	1A- 38
AN507-632R12	111- 4
AN507-632R5	138- 5
AN507-632R8	126- 5
AN507-640R4	92- 39
AN507-832R12	63- 52
AN507-832R12	63A- 52
AN507-832R6	9- 13
AN507-832R8	11- 57
AN507-832R8	120A- 38
AN507BG32R12	120C- 19
AN507BG632R12	120A- 54
AN507B632R12	63- 12
AN507B632R12	63- 14
AN507B632R12	63- 15
AN507B632R12	63- 16
AN507B632R12	63- 20
AN507B632R12	63- 21
AN507B632R12	63A- 15
AN507B632R12	63A- 17
AN507B632R12	63A- 20
AN507B632R12	63A- 21
AN507B632R12	63A- 25
AN507B632R12	63A- 26
AN507B632R12	94- 9
AN507B632R12	95- 9
AN507B632R12	120- 9
AN507B632R12	120B- 18
AN509-10R14	111A- 3
AN509-10R14	111B- 2
AN509-10R16	72- 21
AN509-10R29	13- 17
AN509-10R31	12A- 10
AN509-10R4	6- 5
AN509-10R4	6- 8
AN509-10R4	6A- 5
AN509-10R4	6A- 5
AN509-10R6	6A- 35
AN509-10R6	6A- 42
AN509-416R12	11- 37
AN509-416R12	11- 38
AN509-416R13	11- 39
AN510-1032R14	111A- 2
AN515-B6R	63- 71
AN515-B6R	63- 72
AN515-B6R	63- 73
AN515-B6R	63- 78
AN515-B6R	63- 79
AN515-10R8	137- 4
AN515-4R5	120- 1
AN515-4R6	120- 82
AN515-6-16	93- 42
AN515-6-16	94- 51
AN515-6-4	133- 33
AN515-6-8	112- 14
AN515-6-8	132- 23
AN515-6R12	58- 16

PART NUMBER	FIGURE AND INDEX NO.
AN515-6R22	120-10A
AN515-6R22	120A- 27
AN515-6R3	62- 14
AN515-6R36	52- 27
AN515-6R36	58- 35
AN515-6R4	38- 65
AN515-6R4	39- 52
AN515-6R4	58- 54
AN515-6R4	59- 52
AN515-6R4	60- 44
AN515-6R4	61- 11
AN515-6R4	64- 17
AN515-6R4	64- 23
AN515-6R4	64- 35
AN515-6R5	44-47A
AN515-6R5	46- 50
AN515-6R5	126- 52
AN515-6R6	58- 44
AN515-6R6	59- 24
AN515-6R6	59- 34
AN515-6R6	59- 45
AN515-6R6	59- 55
AN515-6R6	60- 30
AN515-6R6	60- 34
AN515-6R6	60- 42
AN515-6R6	63- 45
AN515-6R6	63A- 45
AN515-6R6	64- 14
AN515-6R6	64- 31
AN515-6R6	113- 1
AN515-6R7	98- 4
AN515-6R8	2- 56
AN515-6R8	2A- 43
AN515-6R8	58- 39
AN515-6R8	59- 38
AN515-6R8	59- 40
AN515-6R8	60- 64
AN515-6R8	60- 66
AN515-6R8	64- 6
AN515-6R8	114- 40
AN515-6R9	85- 5
AN515-8-14	120A- 77
AN515-8-14	120C- 70
AN515-8-7	120A- 78
AN515-8-7	120C- 71
AN515-8D	96- 37
AN515-8R	67- 2
AN515-8R	67- 27
AN515-8R	68- 2
AN515-8R	68- 24
AN515-8R10	38- 46
AN515-8R10	120- 67
AN515-8R12	45- 45
AN515-8R14	57A- 10
AN515-8R24	1- 31
AN515-8R24	1A- 24
AN515-8R4	39- 52
AN515-8R4	85- 33
AN515-8R5	58- 57
AN515-8R5	114- 36
AN515-8R6	49- 39
AN515-8R6	51- 6
AN515-8R6	11- 54
AN515-8R6	113- 16
AN515-8R7	1- 34
AN515-8R7	1A- 26
AN515-8R7	6- 24
AN515-8R8	25- 15
AN515-8R8	26- 6
AN515-8R8	49- 28
AN515-8R8	49- 33
AN515-8R8	52- 37
AN515-8R8	11- 55
AN515-8R8	6A- 33
AN515-8R8	10A- 8

PART NUMBER	FIGURE AND INDEX NO.
AN515-8R8	57A- 6
AN515-8R8	78- 9
AN515-8R8	81- 39
AN515-8R8	81- 45
AN515-8R8	81A- 9
AN515-8R8	81A- 13
AN515-8R8	81A- 41
AN515-8R8	81A- 43
AN515-8R8	84- 12
AN515-8R8	96- 20
AN515-8R8	96- 30
AN515-8R8	96A- 18
AN515-8R8	96A- 28
AN515-8R8	114- 34
AN515-8R8	120A- 66
AN515-8R8	120A- 75
AN515-8R8	120C- 57
AN515-8R8	120C- 68
AN515-8R8	120C- 79
AN515-8R8	124A- 14
AN515-8R9	126- 35
AN515-832R7	6A- 23
AN515B-10R14	63A- 80
AN515B-10R16	63A- 81
AN515BR6	124- 12
AN515B6-5	75- 24
AN515B6-5	76- 24
AN515B6-5	77- 24
AN515B6-6	62- 5
AN515B6R	60- 77
AN515B6R	61- 22
AN515B6R	61- 23
AN515B6R	61- 24
AN515B6R	61- 26
AN515B6R	61- 27
AN515B6R	61- 28
AN515B6R	61- 29
AN515B6R	61- 30
AN515B6R	61- 31
AN515B6R	61- 34
AN515B6R	61- 35
AN515B6R	61- 36
AN515B6R	61- 37
AN515B6R	61- 38
AN515B6R	61- 39
AN515B6R	61- 40
AN515B6R	62- 22
AN515B6R	63A- 73
AN515B6R	63A- 74
AN515B6R	63A- 75
AN515B6R10	62- 36
AN515B6R12	59- 65
AN515B6R12	60- 54
AN515B6R12	62- 35
AN515B6R12	62- 39
AN515B6R12	62- 42
AN515B6R12	63- 69
AN515B6R12	63- 70
AN515B6R12	63A- 71
AN515B6R12	63A- 72
AN515B6R12	64- 40
AN515B6R12	92- 1
AN515B6R12	92- 1
AN515B6R12	92- 2
AN515B6R12	92- 2
AN515B6R12	92- 3
AN515B6R14	93- 10
AN515B6R16	62- 19
AN515B6R16	62- 20
AN515B6R16	62- 34
AN515B6R16	62- 37
AN515B6R16	62- 38
AN515B6R6	63- 63
AN515B6R6	63A- 64
AN515B6R8	62- 33

PART NUMBER	FIGURE AND INDEX NO.
AN515B8-16	62- 7
AN515B8-20	62- 7
AN515B8-32	62- 7
AN515B8R20	63- 59
AN515B8R20	63A- 60
AN5156R8	63- 75
AN5156R8	63- 77
AN5156R8	63A- 77
AN5156R8	63A- 79
AN520-10-6	133- 54
AN520-10R10	27- 6
AN520-10R10	39- 40
AN520-10R10	39- 44
AN520-10R10	40- 41
AN520-10R10	40A- 41
AN520-10R10	49- 3
AN520-10R10	6A- 29
AN520-10R12	27- 6
AN520-10R12	43- 3
AN520-10R12	43- 34
AN520-10R12	44- 4
AN520-10R12	44- 24
AN520-10R12	45- 3
AN520-10R12	45- 29
AN520-10R12	46- 4
AN520-10R12	46- 24
AN520-10R14	120D- 1
AN520-10R16	125- 9
AN520-10R20	86- 49
AN520-10R22	99A- 10
AN520-10R26	91- 11
AN520-10R28	12- 19
AN520-10R28	13- 17
AN520-10R5	1- 26
AN520-10R5	6- 49
AN520-10R5	83- 3
AN520-10R6	33- 14
AN520-10R6	38- 52
AN520-10R6	43- 29
AN520-10R6	44- 22
AN520-10R6	44- 28
AN520-10R6	45- 27
AN520-10R6	46- 22
AN520-10R6	46- 28
AN520-10R6	48- 2
AN520-10R6	113- 11
AN520-10R6	121- 28
AN520-10R7	16- 25
AN520-10R7	17- 13
AN520-10R7	23- 40
AN520-10R7	24- 58
AN520-10R7	25- 26
AN520-10R7	32- 11
AN520-10R7	72- 28
AN520-10R7	93- 54
AN520-10R7	93- 56
AN520-10R7	124A- 22
AN520-10R72	123- 66
AN520-10R8	25- 15
AN520-10R8	26- 7
AN520-10R8	75- 44
AN520-10R8	76- 38
AN520-10R8	86- 15
AN520-10R9	48A- 12
AN520-10R9	125- 2
AN520-10R9	125- 26
AN520-10R9	126- 50
AN520-10R9	126- 61
AN520-416-14	111- 1
AN520-416R20	51- 6
AN520-416R20	51- 8
AN520B10R14	63A- 81
AN520B10R16	62- 40
AN520B10R16	62- 41
AN520B10R16	94- 46

PART NUMBER	FIGURE AND INDEX NO.
AN520B10R16	94- 48
AN520B10R16	95- 45
AN520B10R16	95- 47
AN520B10R16	95- 47
AN520B10R16	95- 47
AN520C10R16	120- 2
AN520C10R16	120- 6
AN520C10R16	120A- 1
AN520C10R16	120A- 8
AN520C10R16	120B- 17
AN520C10R16	120B- 60
AN520C8R8	120- 78
AN520PB10R12	65- 21
AN525-10R6	106- 40
AN525-10R8	44- 38
AN525-10R8	46- 36
AN525-416R9	14- 29
AN525-832-8	82- 3
AN525-832R8	81- 53
AN525-832R8	81A- 53
AN526C1032R16	120C- 18
AN526C1032R16	120C- 31
AN530-10-6	102- 14
AN535-0-2	128A- 20
AN545-6-5	112- 8
AN545-6R4	34- 6
AN545-6R8	98- 11
AN5525-1	75- 62
AN5525-1	76- 65
AN5525-1	77- 69
AN565D6-3	137- 13
AN6-10A	23- 91
AN6-11A	106- 25
AN6-16A	39- 4
AN6-17A	39- 4
AN6-21A	134- 17
AN6-23A	39- 30
AN6-25A	38- 18
AN6-25A	39- 30
AN6-25A	73- 3
AN6-25A	74- 3
AN6-26A	74- 3
AN6-31	41- 36
AN6-31	41- 54
AN6-34A	73- 2
AN6-34A	74- 2
AN6-35A	74- 2
AN6-36A	73- 2
AN6-5A	38- 60
AN6-6A	23- 89
AN6-6A	24- 50
AN6-6A	39- 36
AN6-7A	23- 92
AN6-7A	10A- 4
AN6227B1	120C- 7
AN6227B20	131- 8
AN6227B20	131- 9
AN6227B26	41- 16
AN6227B26	41A- 9
AN6227B32	41- 25
AN6227B32	41A- 21
AN6227B4	41- 19
AN6227B46	134- 36
AN6227B5	41- 15
AN6227B5	41A- 8
AN6227B6	6- 43
AN6227B6	131- 10
AN6227B6	131- 11
AN6227B6	131- 20
AN6227B7	131- 19
AN6227B8	98- 29
AN6227B8	137- 19
AN6230B13	134- 37
AN6230B2	129- 27
AN6230B2	132- 45

PART NUMBER	FIGURE AND INDEX NO.
AN6230B20	130- 8
AN6230B28	129- 7
AN6230B3	41- 20
AN6230B3	41A- 13
AN6230B3	129- 28
AN6230B3	132- 46
AN6230B6	41- 23
AN6230B6	41A- 16
AN6230B6	134- 13
AN6287-1	41- 19
AN6289D10	99A- 4
AN6290-10	99A- 5
AN6290-4	129- 42
AN6328-8Z-3	2B- 28
AN665-21R	91- 12
AN7-20A	38- 9
AN7-24A	1- 4
AN7-24A	1A- 4
AN7-27A	75- 5
AN7-33A	76- 5
AN7-33A	77- 6
AN737RM22	120- 17
AN737RM22	120A- 7
AN737RM22	120A- 16
AN737RM22	120B- 26
AN737RM22	120B- 72
AN737RM22	120C- 26
AN737RM22	120C- 30
AN737TW82	98- 8
AN74A3	75- 26
AN74A3	77- 26
AN74A5	132- 29
AN741-18P	73- 27
AN741-18P	74- 26
AN741D13	86- 22
AN741T5	108-45A
AN742-D3	101- 3
AN742-D4	63- 28
AN742-3	81- 47
AN742-4	74- 14
AN742-4	74- 44
AN742-8	76- 22
AN742-8	93- 18
AN742-8	94- 17
AN742D-4	74- 43
AN742D12	76- 75
AN742D14	120D- 21
AN742D2	73- 10
AN742D2	74- 10
AN742D3	58- 21
AN742D3	59- 19
AN742D3	73- 13
AN742D3	73- 42
AN742D3	74- 13
AN742D3	85- 51
AN742D3	101- 6
AN742D32	99- 11
AN742D36	73- 43
AN742D36	74- 45
AN742D4	60- 28
AN742D4	99- 24
AN742D50	76- 75
AN742D7	73- 42
AN742D8	95- 18
AN742D8	95- 19
AN742D8	95- 20
AN742D8	120D- 21
AN742D8	120D- 22
AN7443	76- 26
AN75A10	132- 37
AN76-11	38- 44
AN775-4	38- 49
AN776-4D	38- 49
AN776-8D	75- 21
AN776-8D	76- 21

PART NUMBER	FIGURE AND INDEX NO.
AN776-8D	77- 21
AN780-2	102- 1
AN780-2	102- 2
AN780-2	102- 2
AN780-2	102- 5
AN780-2	102- 6
AN8-17A	9- 3
AN8-23A	1- 1
AN8-23A	1A- 1
AN8-24A	9- 2
AN8H7A	134- 14
AN8H7A	72- 2
AN814-5DL	131- 18
AN815-4D	38- 48
AN815-4D	87- 12
AN815-4D	88- 11
AN815-4D	92- 8
AN815-4D	92- 21
AN815-4D	92- 36
AN815-6D	96- 17
AN815-6D	96A- 7
AN815-6D	96A- 13
AN815-6D	97- 14
AN815-8D	96A- 35
AN815-8D	97- 34
AN816-2B	61- 16
AN816-2B	86- 36
AN816-2B	86- 41
AN816-2B	86- 43
AN816-2D	61- 15
AN816-2D	63-14A
AN816-2D	63A- 18
AN816-2D	86- 5
AN816-2D	93- 42
AN816-2D	94- 39
AN816-2D	94- 51
AN816-2D	95- 39
AN816-2D	99- 3
AN816-2D	100- 15
AN816-2D	102- 8
AN816-2D	120- 15
AN816-2D	120A- 53
AN816-2D	120B- 24
AN816-2D	120C- 24
AN816-3D	124- 14
AN816-4-4D	92- 41
AN816-4-4D	93- 38
AN816-4D	99- 16
AN816-4D	99- 20
AN816-5D	124- 20
AN816-6D	86- 46
AN816-6D	95-35A
AN816-7D	97- 45
AN816-8D	100- 1
AN818-6D	6- 18
AN818-6D	6A- 10
AN821-6D	96A- 4A
AN821-6D	96A- 15
AN823-2D	94- 54
AN823-2D	95- 38
AN823-2D	120- 14
AN823-2D	120C- 23
AN823-4B	99- 17
AN823-4D	92- 33
AN823-4D	93- 39
AN823-4D	98- 37
AN823-4D	98- 38
AN823-4D	99- 21
AN823-4D	99- 39
AN823-6B	95- 52
AN823-6B	120D- 27
AN824-6D	96A- 8
AN824-6D	98- 26
AN825-4D	63- 69
AN825-4D	63A- 71

PART NUMBER	FIGURE AND INDEX NO.
AN825-4D	92- 22
AN825-4D	98- 33
AN825-4D	92- 9
AN826-2D	94- 38
AN826-2D	95-38A
AN826-3D	124- 8
AN826-4D	92- 15
AN826-4D	92- 23
AN826-6D	93- 35
AN826-6D	94- 34
AN826-6D	95- 34
AN832-2D	75- 48
AN832-2D	76- 49
AN832-2D	79- 17
AN832-2D	80- 21
AN832-4D	88- 14
AN832-6D	95- 30
AN832-6D	120- 12
AN832-6D	120D- 9
AN833-10D	99A- 3
AN833-2D	61- 17
AN833-2D	96- 40
AN833-2D	96- 46
AN833-2D	96A- 39
AN833-2D	97- 38
AN833-2D	99- 4
AN833-4D	38- 14
AN833-4D	39- 18
AN833-4D	87- 3
AN833-4D	87- 3
AN833-4D	87- 8
AN833-4D	87- 15
AN833-4D	88- 3
AN833-4D	88- 3
AN833-4D	88- 8
AN833-4D	88- 14
AN833-6D	93- 31
AN833-6D	94- 30
AN833-6D	95- 30
AN834-2D	75- 48
AN834-2D	76- 46
AN834-2D	77- 54
AN837-4D	87- 9
AN837-4D	88- 9
AN837-4D	88- 18
AN837-4D	99- 4A
AN837-4D	122- 49
AN837-4D	123- 48
AN842-3	81A- 46
AN842-6D	120A- 11
AN842-8	93- 26
AN842-8	94- 25
AN842-8	95- 25
AN842-8	120D- 11
AN844-6D	120A- 5
AN844-8	93- 12
AN844-8	94- 11
AN844-8	95- 11
AN844-8	120D- 15
AN900-10	74- 45
AN900-10	99- 38
AN900-12	75- 20
AN900-12	76- 20
AN900-12	77- 20
AN901-4C	38- 49
AN901-5A	41- 19
AN901-5A	41A- 12
AN902-4	6A- 25
AN902B4	38- 15
AN902B4	39- 19
AN902B4	6- 26
AN902B4	87- 4
AN902B4	132- 40
AN902B4D	88- 4
AN910-1D	99- 3

PART NUMBER	FIGURE AND INDEX NO.
AN910-1D	100- 3
AN910-3	48- 1
AN911-1D	100- 4
AN911-3	95- 6
AN911-3D	93- 7
AN911-3D	94- 6
AN911-3D	95- 6
AN911-3D	120D- 6
AN912-1D	86- 44
AN912-1D	93- 47
AN912-1D	93- 52
AN912-1D	94- 37
AN912-1D	94- 41
AN912-1D	95- 37
AN912-1D	95- 41
AN912-1D	120- 14
AN912-1D	120A- 51
AN912-1D	120B- 22
AN912-1D	120C- 22
AN912-2	95- 51
AN912-2	120D- 26
AN912-3	76- 69
AN912-3	77- 78
AN912-3	99- 3
AN912-4D	120D- 6
AN912-4D	120D- 8
AN914-1	86- 34
AN914-1D	92- 48
AN914-1D	98- 39
AN914-3	95- 7
AN914-3D	93- 8
AN914-3D	94- 7
AN914-3D	95- 7
AN914-3D	120D- 6
AN915-2	96- 45
AN915-2	96A- 45
AN915-2	97- 45
AN916-1D	86- 4
AN917-2D	86- 45
AN921-4D	137- 12
AN924-2D	61- 18
AN924-2D	75- 48
AN924-2D	75- 48
AN924-2D	76- 47
AN924-2D	76- 50
AN924-2D	77- 54
AN924-2D	79- 18
AN924-2D	80- 22
AN924-2D	96- 40
AN924-2D	96- 46
AN924-2D	96A- 39
AN924-2D	97- 38
AN924-2D	99- 4
AN924-3D	6- 42
AN924-4	122- 54
AN924-4D	38- 16
AN924-4D	39- 20
AN924-4D	87- 5
AN924-4D	87- 11
AN924-4D	87- 17
AN924-4D	88- 5
AN924-4D	88- 10
AN924-4D	88- 16
AN924-4D	88- 18
AN924-4D	99- 4A
AN924-4D	122- 49
AN924-4D	123- 48
AN924-4D	137- 12
AN924-6D	93- 33
AN924-6D	94- 32
AN924-6D	95- 32
AN924-6D	95- 55
AN924-6D	120- 12
AN924-6D	120D- 9
AN924-6D	120D- 30

PART NUMBER	FIGURE AND INDEX NO.
AN931-1	96- 34
AN931-1	96A- 32
AN931-3-7	111- 33
AN935-10	125- 9
AN935-10	128A- 4
AN935-10	128A- 31
AN935-10L	120D- 1
AN935-416	132- 30
AN935-8L	128A- 24
AN935-8L	128A- 35
AN935-8L	128A- 41
AN936-A6	39- 53
AN936-A616	38- 61
AN936-B10	44- 27
AN936-B10	48A- 13
AN936-B416	124- 18
AN936-B8	39- 53
AN936A-6B	63A- 25
AN936A6	38- 66
AN936A6	132- 24
AN936A6B	75- 24
AN936A6B	76- 24
AN936A6B	77- 24
AN936A8	58- 58
AN936A8	63- 57
AN936A8	63A- 52
AN936A8	63A- 57
AN936A8	85- 33
AN936A8B	61- 5
AN936B-416	91- 4A
AN936B10	46- 27
AN936B10	73- 27
AN936B10	74- 26
AN936B6B	63A- 71
AN936B6B	63A- 72
AN936B616	39- 37
AN936C10	132- 49
AN944-101	134- 27
AN944-101A	41- 46
AN944-101A	41- 61
AN944-101A	41- 70
AN944-101A	41- 83
AN944-101A	41A- 34
AN944-101A	41A- 47
AN960-A3L	37- 10
AN960-A416	104- 16
AN960-C10L	113- 12
AN960-C416L	51- 6
AN960-C416L	51- 8
AN960-C716	134- 44
AN960-D10	91- 15
AN960-D716	99- 4A
AN960-10	12A- 11
AN960-10	21- 37
AN960-10	22- 36
AN960-10	23- 8
AN960-10	23- 61
AN960-10	23- 73
AN960-10	24- 6
AN960-10	24- 40
AN960-10	25- 5
AN960-10	26- 16
AN960-10	35- 34
AN960-10	36- 25
AN960-10	40- 18
AN960-10	40A- 18
AN960-10	49- 4
AN960-10	54- 5
AN960-10	54- 28
AN960-10	54- 33
AN960-10	55- 22
AN960-10	55- 27
AN960-10	8- 10
AN960-10	56B- 42
AN960-10	56B- 55

PART NUMBER	FIGURE AND INDEX NO.
AN960-10	56B- 63
AN960-10	81- 23
AN960-10	82- 8
AN960-10	89- 22
AN960-10	91- 25
AN960-10	101- 16
AN960-10	108- 41
AN960-10	108- 44
AN960-10	108- 48
AN960-10	109- 42
AN960-10	120A- 88
AN960-10	120A- 92
AN960-10	120A- 96
AN960-10	120A-105
AN960-10	120C- 83
AN960-10	121- 48
AN960-10	122- 48
AN960-10	122- 60
AN960-10	123- 47
AN960-10	123- 58
AN960-10	137- 5
AN960-10L	12- 10
AN960-10L	23- 5
AN960-10L	24- 3
AN960-10L	41- 72
AN960-10L	41A- 36
AN960-10L	43- 15
AN960-10L	44- 13
AN960-10L	45- 15
AN960-10L	46- 13
AN960-10L	46A- 15
AN960-10L	66- 17
AN960-10L	73- 17
AN960-10L	73- 42
AN960-10L	73- 51
AN960-10L	74- 17
AN960-10L	77-40B
AN960-10L	84- 35
AN960-10L	85- 50
AN960-10L	90- 8
AN960-10L	90- 14
AN960-10L	90- 18
AN960-10L	91- 7
AN960-10L	91- 11
AN960-10L	91- 15
AN960-10L	99- 13
AN960-10L	101- 15
AN960-10L	107- 50
AN960-10L	107- 58
AN960-10L	110- 30
AN960-10L	120- 41
AN960-10L	120- 52
AN960-10L	120- 55
AN960-10L	120- 70
AN960-10L	120-80A
AN960-10L	120- 85
AN960-10L	120A- 81
AN960-10L	120B- 36
AN960-10L	120B- 47
AN960-10L	120B- 50
AN960-10L	120C- 74
AN960-10L	124- 21
AN960-10L	129- 35
AN960-10L	140- 3
AN960-2	101- 19
AN960-2	111B- 11
AN960-4	47- 16
AN960-4	48- 13
AN960-4	49- 20
AN960-4	81- 33
AN960-4	81A- 35
AN960-4	87- 51
AN960-4	99A- 14
AN960-4	101- 11
AN960-4	109- 62

PART NUMBER	FIGURE AND INDEX NO.
AN960-4	120A- 84
AN960-4	120A- 98
AN960-4	120C- 77
AN960-4L	120- 1
AN960-4L	120- 51
AN960-4L	120- 52
AN960-4L	120- 82
AN960-4L	120B- 3
AN960-4L	120B- 46
AN960-4L	120B- 47
AN960-4L	120C- 3
AN960-416	12- 2
AN960-416	12A- 2
AN960-416	21- 33
AN960-416	22- 32
AN960-416	35- 18
AN960-416	35- 22
AN960-416	36- 11
AN960-416	36- 15
AN960-416	41- 44
AN960-416	11- 40
AN960-416	99A- 15
AN960-416	107- 45
AN960-416	108- 6
AN960-416	108- 22
AN960-416	108- 28
AN960-416	109- 32
AN960-416	110- 17
AN960-416	111- 10
AN960-416	121- 7
AN960-416	122- 9
AN960-416	123- 9
AN960-416	126- 17
AN960-416	126- 32
AN960-416	129- 14
AN960-416	130- 4
AN960-416	130A- 10
AN960-416	132- 14
AN960-416L	13- 2
AN960-416L	40A- 45
AN960-416L	41- 66
AN960-416L	41- 78
AN960-416L	41A- 30
AN960-416L	41A- 42
AN960-416L	56B- 5
AN960-416L	72- 7
AN960-416L	73- 41
AN960-416L	74- 42
AN960-416L	81- 43
AN960-416L	90- 4
AN960-416L	91- 18
AN960-416L	103- 3
AN960-416L	104- 12
AN960-416L	104- 20
AN960-416L	105- 20
AN960-416L	106- 10
AN960-416L	107- 26
AN960-416L	110- 23
AN960-416L	111- 1
AN960-416L	121- 37
AN960-416L	132- 11
AN960-416L	100- 6
AN960-516	23- 56
AN960-516	38- 22
AN960-516	38- 43
AN960-516	40- 24
AN960-516	40- 37
AN960-516	40A- 24
AN960-516	40A- 37
AN960-516	41- 8
AN960-516	42- 13
AN960-516	4- 13
AN960-516	10- 18
AN960-516	10A- 2
AN960-516	91- 24

PART NUMBER	FIGURE AND INDEX NO.
AN960-516	121- 13
AN960-516	122- 15
AN960-516	132- 38
AN960-516L	23- 87
AN960-516L	23- 88
AN960-516L	39- 33
AN960-516L	40- 8
AN960-516L	40A- 8
AN960-516L	41- 50
AN960-516L	10- 5
AN960-516L	126- 13
AN960-516L	126- 14
AN960-516L	126- 19
AN960-516L	126- 24
AN960-516L	126- 29
AN960-516L	126- 33
AN960-6	96- 27
AN960-6	96A- 25
AN960-6	97- 24
AN960-6L	58- 39
AN960-6L	59- 38
AN960-6L	59- 40
AN960-6L	60- 64
AN960-6L	60- 66
AN960-6L	63- 75
AN960-6L	63- 77
AN960-6L	63A- 77
AN960-6L	63A- 79
AN960-6L	113- 2
AN960-6L	120-10B
AN960-6L	120A- 27
AN960-616	38- 19
AN960-616	10- 2
AN960-616	10- 6
AN960-616	10A- 5
AN960-616	134- 18
AN960-616L	23- 89
AN960-616L	38- 44
AN960-616L	39- 38
AN960-616L	41- 38
AN960-616L	41- 56
AN960-616L	10- 2
AN960-616L	132- 5
AN960-716	1- 5
AN960-716	1A- 5
AN960-716	56B- 46
AN960-716	75- 6
AN960-716L	41- 50
AN960-716L	77- 7
AN960-716L	87- 10
AN960-716L	87- 16
AN960-716L	88- 9
AN960-716L	88- 15
AN960-716L	88- 18
AN960-716L	98- 40
AN960-8	33- 11
AN960-8	120-78A
AN960-8	120A- 39
AN960-8	120A- 66
AN960-8	120A- 75
AN960-8	120A- 79
AN960-8	120C- 57
AN960-8	120C- 68
AN960-8	120C- 72
AN960-8	120C- 77
AN960-8	120C- 79
AN960-8L	11- 56
AN960-816	1- 2
AN960-816	1A- 2
AN960-816	103- 10
AN960-816	133- 3
AN960-816	133- 24
AN960-816	135- 41
AN960-816	72- 17
AN960-816	72- 4

PART NUMBER	FIGURE AND INDEX NO.
AN960-816L	9- 2
AN960A10L	85- 11
AN960A10L	86- 19
AN960A816L	103- 11
AN960C416L	73- 31
AN960C416L	74- 38
AN960C416L	138- 9
AN960C6	58- 17
AN960C6	59- 46
AN960C6	60- 35
AN960C616L	56A- 27
AN960C616L	56B- 36
AN960C616L	56B- 67
AN960C8	58- 45
AN960D10	56A- 40
AN960D10	56B- 11
AN960D10	60- 61
AN960D10	94- 42
AN960D10	95- 42
AN960D10	106- 27
AN960D10	124A- 23
AN960D10L	93- 5
AN960D10L	94- 4
AN960D10L	95- 4
AN960D10L	120D- 4
AN960D416	79- 49
AN960D416	80- 51
AN960D416L	126- 37
AN960D516	61- 19
AN960D516	75- 48
AN960D516	75- 48
AN960D516	76- 48
AN960D516	77- 54
AN960D516	79- 19
AN960D516	80- 23
AN960D516	96- 40
AN960D516	96- 46
AN960D516	96A- 39
AN960D516	97- 38
AN960D516	99- 4
AN960D516	123- 18
AN960D516L	75- 43
AN960D516L	126- 37
AN960D6	64- 16
AN960D6	98- 5
AN960D616	39- 5
AN960D716	39- 8
AN960D716L	122- 49
AN960D716L	123- 48
AN960D916	93- 32
AN960D916	94- 31
AN960D916	95- 31
AN960D916	95- 54
AN960D916	120- 12
AN960D916	120D- 9
AN960D916	120D- 29
AN960PD616	6- 41
AN970-3	44- 22
AN970-3	46- 22
AN970-3	98- 13
AN970-3	99A- 10
AN970-3	114- 36
AN970-3	114- 36
AN970-3	123- 66
AN970-4	73- 31
AN970-4	74- 39
AN970-5	65- 12
A109-014-3	63- 68
A1553-012-3	60- 52
A1633-3	72-18A
A1663-017-1	63- 7
A1776-8Z-3	86- 11
A1793-6Z-3	84- 16
A1804-6Z-3	84- 27
A1804-6Z-3	124- 28

PART NUMBER	FIGURE AND INDEX NO.
A298A-16-27	75- 52
A2980A-12-27	95-20A
A2980A-14	73- 20
A2980A-14-27	74- 10
A2980A-16-27	84- 19
A2980A-2-27	25- 34
A2980A-20-27	74- 10
A2980A-27	122- 50
A2980A-27	123- 49
A2980A-3	90- 2
A2980A-4-27	2- 56
A2980A-4-27	2A- 43
A2980A-4-27	2B- 4
A2980A-4-27	73- 40
A2980A-6-27	96A- 14
A2981-16-27	77- 88
A2981A-12	75- 15
A2981A-12	76- 15
A2981A-12-27	77- 15
A2981A-12-27	77- 83
A2981A-12-27	120D- 22
A2981A-16-27	76- 78
A2981A-27	122- 50
A2981A-27	123- 49
A2981A-3-27	73- 15
A2981A-3-27	81- 35
A2981A-3-27	81A- 37
A2981A-3-27	81A- 50
A2981A-4-27	65- 18
A2981A-4-27	65- 18
A2981A-4-27	86- 38
A2981A-5	124- 21
A2981A-6	96- 14
A2981A-6	97- 12
A2981A-8-27	65- 18
A2981A-8-27	65- 18
A2981A-8-27	93- 20
A2981A-8-27	94- 19
A2981A-8-27	95- 17
A2981A-8-27	95- 20
A2981A4-27	62- 16
A2981A8-27	75- 22
A2981S-8-24	76- 22
A2982-12-27	93- 19
A2982-12-27	94- 18
A2982A-14-27	76- 55
A2982A-14-27	76- 78
A2982A-14-27	77- 59
A2982A-14-27	77- 88
A2982A-3-27	73- 45
A3046-4A	96- 47
A3046-4A	96A- 46
A3046A-6	2- 3
A3046A-7-3	111- 16
A3046A-7-3	111- 17
A3046A-7-3	111- 18
A3046A-8-92	94- 22
A3046A-8-92	99- 33
A3046A-8-92	111A- 11
A3046A4-92	39- 22
A3047A-12-92	93- 22
A3047A-12-92	94- 21
A3047A-12-92	95- 21
A3047A-12-92	120D- 23
A3047A-4-92	73- 43
A3047A-4-92	74- 45
A3047A-5	73- 20
A3047A-5-92	73- 20
A3047A-5-92	74- 28
A3047A-8-92	93- 23
A3047A-8-92	97- 3
A3047A-8-92	96- 8
A3047A-8-92	6A- 18
A3047A-8-92	6A- 18
A3047A7-92	111- 24

PART NUMBER	FIGURE AND INDEX NO.
A3048A-8-92	99- 34
A3053-14-27	139- 19
A3053A-16-27	77- 88
A3122-16-1	76- 54
A3122-18-1	75- 14
A3122-18-1	76- 14
A3122-42-1	75- 41
A3122-42-1	76- 42
A3122-50-1	84- 32
A3122-8-1	34- 17
A3493-012-1	111- 27
A3493-012-1	111- 28
A3493-012-1	111- 29
A3493-012-1	113- 14
A4050	133- 18
A4138	133- 5
A5988-8Z-3	19- 8
A5988-8Z-3	20- 8
A5988-8Z-3	21- 10
A5988-8Z-3	22- 9
A674	51- 3
A7512-12	1- 41
A8K-75	9- 17
A8K120	81- 54
A8K75	81- 55
A8K75	81A- 54
A9028-4Z-3	17- 30
A9031-8Z-3	19- 20
A9167-21	120A- 33
B-1341-8	120A- 83
B-1341-8	120C- 76
B-1564	135- 53
B-1564	136- 14
B-1566	135- 47
B-1567	135- 7
B-1569	135- 51
B-1574	135- 38
B-1578	135- 46
B-1590	135- 17
B-1591	135- 19
B-1592	135- 18
B-1608	135- 29
B-1610	120C- 15
B-1613	135- 44
B-1965	136- 21
B-1975	135- 17
B-2000	135- 46
B-2289-1	136- 11
B-2289-2	136- 11
B-2289-3	136- 11
B-2345	136- 28
B-296-17	120B- 13
B-296-17	120C- 13
B-296-18	120B- 14
B-296-18	120C- 14
B-296-20	120A- 45
B-296-4	120B- 69
B-296-4	120C- 39
B-296-5	120B- 68
B-296-5	120C- 38
B-296-50	120A- 21
B-296-51	120A- 22
B-296-52	120A- 25
B-296-53	120A- 26
B-296-56	120- 28
B-296-57	120- 26
B-296-58	120- 4
B-296-58	120A- 3
B-296-58	120B- 61
B-296-58	120C- 32
B-296-59	120- 3
B-296-59	120A- 2
B-296-59	120B- 62
B-296-59	120C- 33
B-296-60	120- 24

PART NUMBER	FIGURE AND INDEX NO.
B-296-61	120- 7
B-296-61	120A- 9
B-296-7	120B- 9
B-296-7	120C- 9
B-296-8	120B- 10
B-296-8	120C- 10
B-610	7- 8
B-610	8- 6
B-610	103- 17
B-674-1	120- 61
B-674-4	120- 59
B-674-5	120- 49
B-674-5	120- 52
B-674-5	120B- 44
B-674-5	120B- 47
B-766-1	120- 43
B-766-1	120B- 38
B-766-2	120- 52
B-766-2	120B- 47
B-804-2	120A- 41
B-804-3	120A- 42
B-806	134- 34
B-828-8	134- 37
B-891-1	134- 23
B-903-1	120- 44
B-903-1	120B- 39
B-903-2	120- 52
B-903-2	120B- 47
B1	50- 27
B1610	120B- 40
C-109	40- 34
C-109	40A- 34
C-1132	120- 45
C-1132	120- 57
C-1132	120B- 40
C-1132-16	120- 22
C-1571	135- 2
C-1579	135-
C-1904	136- 17
C-1939	136- 32
C-2343	136- 34
C-3-1	134- 15
C-3-1A	134- 15
C-3-6	134- 16
C-621	120- 52
C-621	120B- 47
C-622	120- 46
C-622	120B- 41
C-630	120- 58
C-631	120- 60
C-6861	53- 34
C-801-1	134- 3
C-801-6	134- 3
C-914	120B- 6
C-914	120C- 6
C-915	120B- 5
C-915	120C- 5
CA-2	60- 60
CA-2	63- 52
CA-2	63A- 52
CM-15	58- 3
CM-15	59- 4
CM-15	86- 56
CM-15	99- 7
CM-25	58- 4
CM-25	59- 3
CM-35	59- 5
CPS-2 1/2	65- 17
CR163-4-2	67- 61
CR163-4-2	68- 60
CR163-4-2	69- 50
CR163-4-4	43- 43
CR163-4-4	43- 47
CR163-4-4	44- 31
CR163-4-4	45- 49

PART NUMBER	FIGURE AND INDEX NO.
CR163-4-4	45- 53
CR163-4-4	69- 52
CR163C-4-4	44- 35
CR163C-4-4	46-
CR163C-4-4	46- 33
CR163C-4-4	71- 50
CR163C-4-4	71- 57
CR163C-4-4	71A- 48
CR163C-4-4	71A- 55
CR6	120C- 28
CS-3	120A- 19
CS-6	120A- 62
CS-6	120C- 45
CS-6	120C- 61
CS-8	120A- 61
CS6	120- 20
CS6	120- 63
CS6	120B- 28
CS8	120- 18
C366	51- 3
D-1594/90M-2	135- 6
D-1594/90M-8	135- 6
D-2006/90M-8	135- 6
D-2341/90M-2	136- 5
D-2341/90M-8	136- 5
E-1558	135- 1
EQ5491S	75- 61
EQ5491S	76- 56
EQ5491S	77- 60
F-5000-832	33- 37
F-620	103- 16
FCC-20068	6A- 4
FCC-20068	6A- 4
FCD-2475-50	66A- 5
G-37	20A- 80
G-37	20C- 73
G-474942	141- 12
G-475935	141- 10
G-484046	141- 35
G-484865	141- 7
G-484907	141- 8
G-485010	141- 2
G-485016	141- 21
G-485210	141- 24
G-485269	141- 5
G-486157	141- 1
G-486161	141- 4
J2049-1D	62- 9
J2049-1D	63- 61
J2049-1D	63A- 62
LM67010XL	130- 7
LM67048XL	130- 7
M-451	28- 7
M-451	28- 11
MF-3A	77- 88
MIL-H-5593-6	120-16A
MS100009	28A- 21
MS15001-4	133- 1
MS15570-5	114- 6
MS15570-5	114- 25
MS15584-2	114- 10
MS15584-2	114- 51
MS16562-16	75- 35
MS16562-16	76- 31
MS16562-16	77- 31
MS16562-16	85- 13
MS20002C5	38- 22
MS20002C5	38- 30
MS20002C6	38- 19
MS2019-2	120- 48
MS2019-2	120- 52
MS20219-2	20B- 43
MS20219-2	20B- 47
MS20220-2	126- 13
MS20220-2	126- 22

PART NUMBER	FIGURE AND INDEX NO.
MS20220-2	126- 37
MS20230A2	2B- 26
MS20230A2	3- 5
MS20230A2	3- 9
MS20230A2	3- 10
MS20230A2	3- 12
MS20230A2	3- 15
MS20230A2	3- 20
MS20230A2	3- 21
MS20230A2	3- 22
MS20230A2	3- 23
MS20230A2	3- 25
MS20230A2	3- 27
MS20230A2	3- 28
MS20230A2	3A- 4
MS20230A2	3A- 5
MS20230A2	3A- 6
MS20230A2	3A- 7
MS20230A2	3A- 8
MS20230A2	3A- 16
MS20230A2	3A- 20
MS20230A2	3A- 25
MS20230A2	3A- 26
MS20230A2	3A- 28
MS20230A2	3A- 31
MS20230B20	80- 24
MS20230B20	80- 32
MS20253-2-175	6- 39
MS20253-2-500	47- 13
MS20253-5-100	47- 14
MS20253-5-100	76- 6
MS20253-5-100	77- 5
MS20253-5-112	76- 6
MS20253-5-112	77- 5
MS20363-428	72- 8
MS20364-1032C	38- 53
MS20364-1032C	85- 12
MS20364-1032C	87- 48
MS20364-1032C	88- 53
MS20364-1032C	120- 71
MS20364-1032C	120A- 57
MS20364-1032C	120A- 81
MS20364-1032C	120A- 88
MS20364-1032C	120A- 92
MS20364-1032C	120A- 96
MS20364-1032C	120A-105
MS20364-1032C	120C- 49
MS20364-1032C	120C- 74
MS20364-1032C	120C- 83
MS20364-428C	121- 36
MS20364-624C	40- 30
MS20364-624C	40A- 30
MS20364-624C	106- 25
MS20364-624C	132- 6
MS20364-720C	1A- 7
MS20364-720C	134- 45
MS20364-820C	1A- 3
MS20364-832C	45- 46
MS20365-10R12	45- 4
MS20365-1032C	12- 10
MS20365-1032C	12A- 12
MS20365-1032C	14- 20
MS20365-1032C	15- 19
MS20365-1032C	16- 26
MS20365-1032C	17- 14
MS20365-1032C	21- 38
MS20365-1032C	22- 37
MS20365-1032C	23- 6
MS20365-1032C	23- 40
MS20365-1032C	23- 62
MS20365-1032C	23- 65
MS20365-1032C	23- 74
MS20365-1032C	24- 4
MS20365-1032C	24- 35
MS20365-1032C	24- 41

PART NUMBER	FIGURE AND INDEX NO.
MS20365-1032C	24- 58
MS20365-1032C	25- 6
MS20365-1032C	25- 27
MS20365-1032C	26- 17
MS20365-1032C	32- 12
MS20365-1032C	33- 15
MS20365-1032C	35- 10
MS20365-1032C	35- 13
MS20365-1032C	35- 34
MS20365-1032C	36- 7
MS20365-1032C	36- 25
MS20365-1032C	39- 27
MS20365-1032C	39- 40
MS20365-1032C	40- 29
MS20365-1032C	40- 42
MS20365-1032C	40A- 29
MS20365-1032C	40A- 42
MS20365-1032C	43- 4
MS20365-1032C	44- 5
MS20365-1032C	46- 5
MS20365-1032C	46A- 3
MS20365-1032C	49- 5
MS20365-1032C	54- 29
MS20365-1032C	54- 32
MS20365-1032C	54- 41
MS20365-1032C	55- 23
MS20365-1032C	55- 26
MS20365-1032C	55- 35
MS20365-1032C	7- 11
MS20365-1032C	8- 11
MS20365-1032C	8- 19
MS20365-1032C	56- 33
MS20365-1032C	56A- 34
MS20365-1032C	56B- 60
MS20365-1032C	72- 22
MS20365-1032C	73- 18
MS20365-1032C	73- 23
MS20365-1032C	73- 27
MS20365-1032C	73- 37
MS20365-1032C	73- 42
MS20365-1032C	74- 15
MS20365-1032C	74- 18
MS20365-1032C	74- 21
MS20365-1032C	74- 34
MS20365-1032C	74- 44
MS20365-1032C	74- 75
MS20365-1032C	81- 22
MS20365-1032C	81- 26
MS20365-1032C	81- 34
MS20365-1032C	81- 42
MS20365-1032C	81A- 28
MS20365-1032C	81A- 36
MS20365-1032C	82- 16
MS20365-1032C	82- 20
MS20365-1032C	83- 4
MS20365-1032C	83- 18
MS20365-1032C	83- 25
MS20365-1032C	84- 36
MS20365-1032C	85- 51
MS20365-1032C	86- 16
MS20365-1032C	86- 24
MS20365-1032C	87- 29
MS20365-1032C	87- 33
MS20365-1032C	87- 43
MS20365-1032C	88- 31
MS20365-1032C	88- 37
MS20365-1032C	88- 48
MS20365-1032C	89- 10
MS20365-1032C	89- 18
MS20365-1032C	89- 23
MS20365-1032C	89- 30
MS20365-1032C	89- 44
MS20365-1032C	89- 47
MS20365-1032C	90- 9
MS20365-1032C	91- 8

PART NUMBER	FIGURE AND INDEX NO.
MS20365-1032C	91- 11
MS20365-1032C	91- 26
MS20365-1032C	93- 5
MS20365-1032C	94- 4
MS20365-1032C	95- 4
MS20365-1032C	98- 13
MS20365-1032C	98- 20
MS20365-1032C	99- 14
MS20365-1032C	99A- 10
MS20365-1032C	101- 17
MS20365-1032C	103- 8
MS20365-1032C	103- 14
MS20365-1032C	103- 21
MS20365-1032C	106- 27
MS20365-1032C	106- 33
MS20365-1032C	107- 57
MS20365-1032C	108- 14
MS20365-1032C	108- 45
MS20365-1032C	108- 49
MS20365-1032C	109- 23
MS20365-1032C	109- 28
MS20365-1032C	109- 33
MS20365-1032C	109- 38
MS20365-1032C	109- 44
MS20365-1032C	109- 51
MS20365-1032C	110- 26
MS20365-1032C	110- 32
MS20365-1032C	111- 12
MS20365-1032C	111A- 4
MS20365-1032C	111B- 3
MS20365-1032C	120- 42
MS20365-1032C	120- 52
MS20365-1032C	120- 56
MS20365-1032C	120-80B
MS20365-1032C	120- 86
MS20365-1032C	120A-101
MS20365-1032C	120B- 37
MS20365-1032C	120B- 47
MS20365-1032C	120B- 51
MS20365-1032C	120D- 4
MS20365-1032C	120D- 21
MS20365-1032C	121- 18
MS20365-1032C	121- 27
MS20365-1032C	121- 31
MS20365-1032C	121- 48
MS20365-1032C	122- 20
MS20365-1032C	122- 48
MS20365-1032C	122- 72
MS20365-1032C	123- 15
MS20365-1032C	123- 47
MS20365-1032C	123- 66
MS20365-1032C	124A- 25
MS20365-1032C	125- 9
MS20365-1032C	126- 17
MS20365-1032C	126- 68
MS20365-420C	106- 35
MS20365-428C	12- 3
MS20365-428C	12A- 2
MS20365-428C	13- 3
MS20365-428C	13- 35
MS20365-428C	14- 29
MS20365-428C	21- 34
MS20365-428C	22- 33
MS20365-428C	33- 18
MS20365-428C	35- 19
MS20365-428C	35- 23
MS20365-428C	36- 12
MS20365-428C	36- 16
MS20365-428C	41- 14
MS20365-428C	41- 45
MS20365-428C	41A- 7
MS20365-428C	54- 6
MS20365-428C	54- 37
MS20365-428C	55- 31
MS20365-428C	7- 6

PART NUMBER	FIGURE AND INDEX NO.
MS20365-428C	8- 5
MS20365-428C	11- 2
MS20365-428C	11- 4
MS20365-428C	11- 41
MS20365-428C	56B- 8
MS20365-428C	56R- 40
MS20365-428C	57- 11
MS20365-428C	57- 23
MS20365-428C	57- 26
MS20365-428C	57A- 4
MS20365-428C	57A- 19
MS20365-428C	73- 32
MS20365-428C	73- 41
MS20365-428C	74- 40
MS20365-428C	74- 42
MS20365-428C	90- 5
MS20365-428C	99- 28
MS20365-428C	99A- 16
MS20365-428C	100- 7
MS20365-428C	103- 4
MS20365-428C	104- 13
MS20365-428C	104- 17
MS20365-428C	104- 21
MS20365-428C	105- 21
MS20365-428C	105- 24
MS20365-428C	105- 27
MS20365-428C	105- 31
MS20365-428C	106- 11
MS20365-428C	106- 14
MS20365-428C	106- 17
MS20365-428C	107- 5
MS20365-428C	107- 14
MS20365-428C	107- 18
MS20365-428C	107- 24
MS20365-428C	107- 30
MS20365-428C	107- 36
MS20365-428C	107- 49
MS20365-428C	108- 3
MS20365-428C	108- 7
MS20365-428C	108- 17
MS20365-428C	108- 23
MS20365-428C	108- 29
MS20365-428C	108- 37
MS20365-428C	109- 57
MS20365-428C	109- 73
MS20365-428C	110- 34
MS20365-428C	111- 1
MS20365-428C	121- 6
MS20365-428C	122- 8
MS20365-428C	122- 56
MS20365-428C	123- 10
MS20365-428C	123- 19
MS20365-428C	123- 55
MS20365-428C	124- 2
MS20365-428C	124A- 2
MS20365-428C	126- 32
MS20365-428C	126- 37
MS20365-428C	126- 38
MS20365-428C	130A- 11
MS20365-428C	132- 15
MS20365-440C	120- 51
MS20365-440C	120- 52
MS20365-440C	120- 75
MS20365-440C	120- 82
MS20365-440C	120A- 84
MS20365-440C	120A- 98
MS20365-440C	120B- 46
MS20365-440C	120B- 47
MS20365-440C	120C- 77
MS20365-524C	21- 45
MS20365-524C	22- 43
MS20365-524C	23- 57
MS20365-524C	23- 88
MS20365-524C	36- 35
MS20365-524C	38- 23

PART NUMBER	FIGURE AND INDEX NO.
MS20365-524C	38- 29
MS20365-524C	39- 6
MS20365-524C	39- 34
MS20365-524C	40- 22
MS20365-524C	40- 24
MS20365-524C	40- 38
MS20365-524C	40- 45
MS20365-524C	40A- 22
MS20365-524C	40A- 24
MS20365-524C	40A- 38
MS20365-524C	41- 5
MS20365-524C	41- 10
MS20365-524C	41A- 4
MS20365-524C	42- 14
MS20365-524C	42- 18
MS20365-524C	4- 14
MS20365-524C	10- 19
MS20365-524C	10A- 3
MS20365-524C	65- 13
MS20365-524C	122- 53
MS20365-524C	123- 52
MS20365-524C	126- 13
MS20365-524C	126- 14
MS20365-524C	126- 19
MS20365-524C	126- 24
MS20365-524C	126- 29
MS20365-524C	126- 33
MS20365-524C	126- 37
MS20365-624C	23- 89
MS20365-624C	24- 51
MS20365-624C	38- 20
MS20365-624C	38- 27
MS20365-624C	39- 31
MS20365-624C	10- 3
MS20365-624C	10A- 6
MS20365-624C	73- 4
MS20365-624C	74- 4
MS20365-624C	134- 19
MS20365-632C	52- 28
MS20365-632C	2- 56
MS20365-632C	2A- 43
MS20365-632C	58- 37
MS20365-632C	58- 39
MS20365-632C	58- 46
MS20365-632C	58- 55
MS20365-632C	59- 36
MS20365-632C	59- 38
MS20365-632C	59- 40
MS20365-632C	59- 47
MS20365-632C	59- 53
MS20365-632C	60- 36
MS20365-632C	60- 45
MS20365-632C	60- 64
MS20365-632C	60- 66
MS20365-632C	63- 45
MS20365-632C	63- 75
MS20365-632C	63- 77
MS20365-632C	63A- 45
MS20365-632C	63A- 77
MS20365-632C	63A- 79
MS20365-632C	64- 7
MS20365-632C	64- 16
MS20365-632C	64- 18
MS20365-632C	64- 24
MS20365-632C	64- 34
MS20365-632C	85- 6
MS20365-632C	98- 6
MS20365-632C	98- 27
MS20365-632C	112- 15
MS20365-632C	114- 41
MS20365-632C	120-10C
MS20365-632C	120A- 27
MS20365-632C	126- 3
MS20365-632C	126- 5
MS20365-632C	137- 15

PART NUMBER	FIGURE AND INDEX NO.
MS20365-720C	38- 10
MS20365-720C	39- 9
MS20365-720C	1- 7
MS20365-720C	75- 7
MS20365-820C	1- 3
MS20365-820C	9- 5
MS20365-820C	72- 18
MS20365-832C	33- 12
MS20365-832C	38- 46
MS20365-832C	39- 24
MS20365-832C	49- 39
MS20365-832C	1- 35
MS20365-832C	1A- 27
MS20365-832C	6A- 34
MS20365-832C	9- 14
MS20365-832C	57A- 7
MS20365-832C	57A- 11
MS20365-832C	78- 10
MS20365-832C	113- 16
MS20365-832C	120- 67
MS20365-832C	120-78B
MS20365-832C	120A- 40
MS20365-832C	120A- 66
MS20365-832C	120A- 75
MS20365-832C	120C- 57
MS20365-832C	120C- 79
MS20365-832C	124A- 12
MS20365-832C	124A- 15
MS20365-832C	126- 36
MS20365B632C	60- 77
MS20365B632C	61- 22
MS20365B632C	61- 23
MS20365B632C	61- 24
MS20365B632C	61- 26
MS20365B632C	61- 27
MS20365B632C	61- 28
MS20365B632C	61- 29
MS20365B632C	61- 30
MS20365B632C	61- 31
MS20365B632C	61- 34
MS20365B632C	61- 35
MS20365B632C	61- 36
MS20365B632C	61- 37
MS20365B632C	61- 38
MS20365B632C	61- 39
MS20365B632C	61- 40
MS20365B632C	62- 6
MS20365B632C	62- 19
MS20365B632C	62- 20
MS20365B632C	62- 22
MS20365B632C	62- 33
MS20365B632C	62- 34
MS20365B632C	62- 35
MS20365B632C	62- 36
MS20365B632C	62- 37
MS20365B632C	62- 38
MS20365B632C	62- 39
MS20365B632C	62- 40
MS20365B632C	62- 41
MS20365B632C	62- 42
MS20365B632C	63- 12
MS20365B632C	63- 14
MS20365B632C	63- 15
MS20365B632C	63- 16
MS20365B632C	63- 20
MS20365B632C	63- 21
MS20365B632C	63- 64
MS20365B632C	63- 69
MS20365B632C	63- 70
MS20365B632C	63- 71
MS20365B632C	63- 72
MS20365B632C	63- 73
MS20365B632C	63- 78
MS20365B632C	63- 79
MS20365B632C	63A- 15

PART NUMBER	FIGURE AND INDEX NO.
MS20365B632C	63A- 17
MS20365B632C	63A- 20
MS20365B632C	63A- 21
MS20365B632C	63A- 26
MS20365B632C	63A- 65
MS20365B632C	63A- 73
MS20365B632C	63A- 74
MS20365B632C	63A- 75
MS20365B632C	63A- 80
MS20365B632C	63A- 81
MS20365B632C	92- 1
MS20365B632C	92- 1
MS20365B632C	92- 2
MS20365B632C	92- 2
MS20365B632C	92- 3
MS20365B832C	62- 10
MS20365B832C	63- 62
MS20365B832C	63A- 63
MS20365F832C	126- 46
MS20366F1032	16- 77
MS20392-1-13	49- 16
MS20392-1-13	56- 25
MS20392-1-13	107- 12
MS20392-1-15	54- 25
MS20392-1-15	55- 14
MS20392-1-15	56- 15
MS20392-1-15	56A- 19
MS20392-1-15	56B- 33
MS20392-1-21	54- 2
MS20392-1-21	55- 2
MS20392-1-21	56- 1
MS20392-1-21	56A- 1
MS20392-1-21	56B- 2
MS20392-1-23	48- 12
MS20392-1-23	48- 16
MS20392-1-23	48A- 25
MS20392-1-33	42- 2
MS20392-1-33	48A- 22
MS20392-1-33	90- 20
MS20392-1-39	56A- 29
MS20392-1-39	56B- 70
MS20392-1-49	49- 6
MS20392-1-49	49- 19
MS20392-1-53	47- 15
MS20392-1-57	107- 22
MS20392-1-7	48- 7
MS20392-1-7	48A- 19
MS20392-1-7	81- 28
MS20392-1-7	81A- 30
MS20392-1-7	101- 10
MS20392-2-11	90- 17
MS20392-2-13	91- 14
MS20392-2-15	89- 13
MS20392-2-15	89- 39
MS20392-2-17	56B- 55
MS20392-2-17	56B- 62
MS20392-2-20	56B- 42
MS20392-2-25	9-11A
MS20392-2-31	55- 9
MS20392-2-31	56- 10
MS20392-2-31	56A- 14
MS20392-2-41	9- 11
MS20392-2-53	106- 37
MS20392-2-9	66- 15
MS20392-3-11	90- 13
MS20392-3-41	56- 19
MS20392-3-47	126- 17
MS20392-3-55	126- 13
MS20392-3-55	126- 26
MS20392-3-55	126- 32
MS20392-4-13	87- 39
MS20392-4-13	88- 44
MS20426AD10-32	9- 9
MS20435M4	40- 31
MS20435M4	40A- 31

PART NUMBER	FIGURE AND INDEX NO.
MS20450C12	44-13B
MS20450C12	46A- 17
MS20450C12	43-18A
MS20450C12	45-18A
MS20450C8-10	49- 25
MS2053-2-1.0	49- 23
MS20822-2D	86- 32
MS20822-2D	93- 42
MS20822-2D	93- 48
MS20822-2D	93- 50
MS20822-2D	93- 52
MS20822-2D	94- 42
MS20822-2D	94- 51
MS20822-2D	95- 42
MS20822-2D	99- 3
MS20822-2D	100- 17
MS20822-2D	120A- 52
MS20822-2D	120B- 23
MS20822-4-4D	87- 3
MS20822-4-4D	88- 3
MS20822-4D	19- 34
MS20822-4D	20- 33
MS20822-4D	21- 30
MS20822-4D	22- 51
MS20822-4D	98- 31
MS20822-4D	99- 22
MS20822-4D	99- 40
MS20822-6-6B	93- 29
MS20822-6-6B	94- 28
MS20822-6-6B	95- 28
MS20822-6-6B	95- 49
MS20822-6-6B	120D- 24
MS20822-6-6D	120D- 8
MS20822-6D	93- 36
MS20822-6D	94- 35
MS20822-6D	95- 35
MS20913-1	97- 31
MS20913-1D	93- 42
MS20913-1D	94- 51
MS20913-1D	102- 16
MS20913-2D	93- 39
MS20913-2D	94- 44
MS20913-2D	95- 43
MS20913-2D	95- 48
MS21919-2	73- 10
MS21919DG	73- 11
MS21919DG-2	96-41A
MS21919DG-2	96A- 41
MS21919DG-7	111B- 8
MS21919DG10	76- 51
MS21919DG10	77- 55
MS21919DG15	99A- 9
MS21919DG18	120- 36
MS21919DG18	120B- 55
MS21919DG2	74- 11
MS21919DG2	74- 46
MS21919DG3	124A- 18
MS21919DG4	74- 45
MS21919DG5	124-21A
MS21919DG6	2B- 5
MS21919DG6	111- 30
MS21919DG8	49- 39
MS21919DG8	76- 51
MS21919DG8	77- 55
MS21919DG8	95- 22
MS21919DG8	120D- 23
MS21919DG9	77- 82
MS21919D6-11	74- 44
MS21919WDG-9	120C- 49
MS21919WDG12	120A- 56
MS24665-130	42- 3
MS24665-130	55-15A
MS24665-130	56- 26
MS24665-130	56- 36
MS24665-130	56B- 70

PART NUMBER	FIGURE AND INDEX NO.
MS24665-130	81- 29
MS24665-130	81A- 31
MS24665-130	87- 37
MS24665-130	88- 42
MS24665-130	107- 12
MS24665-130	107- 22
MS24665-132	40- 20
MS24665-132	40A- 20
MS24665-132	41- 74
MS24665-132	41A- 38
MS24665-132	47- 18
MS24665-132	48- 14
MS24665-132	48- 8
MS24665-132	48A- 20
MS24665-132	48A- 23
MS24665-132	48A- 26
MS24665-132	49- 7
MS24665-132	49- 17
MS24665-132	49- 21
MS24665-132	55-15A
MS24665-132	56- 11
MS24665-132	56- 16
MS24665-132	56- 21
MS24665-132	56A- 21
MS24665-132	56A- 30
MS24665-132	56B- 31
MS24665-132	56B- 55
MS24665-132	56B- 42
MS24665-132	56B- 64
MS24665-132	89- 5
MS24665-132	89- 14
MS24665-132	89- 35
MS24665-132	89- 40
MS24665-132	90- 15
MS24665-132	90- 19
MS24665-132	90- 21
MS24665-132	91- 15
MS24665-132	101- 12
MS24665-132	104- 9
MS24665-132	105- 10
MS24665-132	105- 14
MS24665-132	106- 38
MS24665-132	109- 29
MS24665-132	121- 41
MS24665-132	126- 13
MS24665-132	126- 17
MS24665-132	126- 24
MS24665-132	126- 32
MS24665-134	16- 12
MS24665-134	40- 11
MS24665-134	40A- 11
MS24665-134	40A- 47
MS24665-134	41- 52
MS24665-134	41- 80
MS24665-134	41- 68
MS24665-134	41A- 32
MS24665-134	41A- 44
MS24665-134	55- 10
MS24665-134	55- 15
MS24665-134	56A- 15
MS24665-134	56A- 20
MS24665-134	56B- 33
MS24665-134	56B- 36
MS24665-134	71A- 9
MS24665-134	106- 23
MS24665-134	109- 5
MS24665-134	109- 15
MS24665-134	123- 58
MS24665-134	6- 37
MS24665-134	67- 16
MS24665-134	67- 58
MS24665-134	68- 14
MS24665-134	68- 57
MS24665-134	69- 15
MS24665-134	69- 56

PART NUMBER	FIGURE AND INDEX NO.
MS24665-134	70- 16
MS24665-134	70- 43
MS24665-134	71- 12
MS24665-134	71- 44
MS24665-134	71A- 42
MS24665-134	73- 50
MS24665-134	82- 10
MS24665-134	91- 20
MS24665-134	104- 6
MS24665-134	104- 24
MS24665-134	105- 7
MS24665-134	105- 17
MS24665-134	106- 7
MS24665-134	107- 53
MS24665-134	108- 12
MS24665-134	108- 34
MS24665-134	108- 50
MS24665-134	109- 19
MS24665-134	109- 24
MS24665-134	109- 39
MS24665-134	109- 45
MS24665-134	121- 24
MS24665-134	121- 26
MS24665-134	122- 60
MS24665-136	40- 12
MS24665-136	40A- 12
MS24665-136	105- 38
MS24665-136	106- 18
MS24665-136	109- 34
MS24665-136	126- 13
MS24665-136	126- 17
MS24665-136	126- 25
MS24665-136	126- 32
MS24665-136	126- 37
MS24665-140	107- 32
MS24665-140	107- 41
MS24665-140	108- 24
MS24665-148	54- 2
MS24665-148	55- 2
MS24665-148	56- 1
MS24665-148	56A- 1
MS24665-148	56B- 2
MS24665-148	66- 16
MS24665-281	87- 40
MS24665-281	88- 45
MS24665-281	101- 25
MS24665-283	104- 25
MS24665-283	106- 19
MS24665-283	133- 5
MS24665-283	133- 26
MS24665-283	134- 21
MS24665-283	134- 25
MS24665-285	41- 40
MS24665-285	41- 58
MS24665-285	55- 13
MS24665-285	56- 13
MS24665-285	56A- 17
MS24665-285	56B- 34
MS24665-285	89- 3
MS24665-285	89- 33
MS24665-3	107- 7
MS24665-351	39- 48
MS24665-351	38- 36
MS24665-351	54- 18
MS24665-351	54- 21
MS24665-351	56B- 46
MS24665-355	104- 26
MS24665-355	105- 39
MS24665-355	106- 20
MS24665-355	107- 28
MS24665-362	38- 59
MS25171-3S	111A- 8
MS25171-3S	111B- 6
MS28777-10	99A- 6
MS28782-32	41- 24

PART NUMBER	FIGURE AND INDEX NO.
MS28782-32	41A- 17
MS28782-6	131- 13
MS29513-10	138- 12
MS29513-112	138- 15
MS29513-116	138- 16
MS29513-232	6-54A
MS29513-232	6A- 38
MS29513-7	101- 21
MS3057-4A	75- 64
MS3057-4A	76- 67
MS3057-4A	77- 71
MS3108-12S-3S	75- 63
MS3108-12S-3S	76- 66
MS3108-12S-3S	77- 70
MS35478-5	37- 14
MS35489-11	31- 1
MS35489-11	31- 21
MS35489-11	31A- 1
MS35489-11	33- 31
MS35489-11	59- 18
MS35489-11	111- 35
MS35489-11	120- 65
MS35489-118	78- 24
MS35489-118	79- 26
MS35489-118	80- 28
MS35489-118	111- 34
MS35489-118S	124-22A
MS35489-12	31- 11
MS35489-12S	124- 22
MS35489-134	114- 46
MS35489-14	16- 11
MS35489-14	31- 6
MS35489-14	33- 21
MS35489-14	33- 31
MS35489-14	96- 10
MS35489-14	97- 5
MS35489-14	111- 25
MS35489-14	6A- 20
MS35489-16-S	17- 5
MS35489-17	65- 10
MS35489-17	111- 22
MS35489-17	111- 22
MS35489-17	120- 38
MS35489-17	120B- 57
MS35489-19	111- 20
MS35489-19	111- 21
MS35489-2S	31- 16
MS35489-2S	86- 40
MS35489-20	31- 31
MS35489-20	78- 39
MS35489-20	79- 23
MS35489-20	80- 37
MS35489-20	97- 35
MS35489-20	111- 19
MS35489-20S	19- 15
MS35489-20S	20- 15
MS35489-20S	21- 17
MS35489-20S	22- 16
MS35489-20S	78- 18
MS35489-23	75- 54
MS35489-4	16- 16
MS35489-4	17- 5
MS35489-4	6- 45
MS35489-4	86- 12
MS35489-4	111- 31
MS35489-4	111- 32
MS35489-4	111- 33
MS35489-4	114- 16
MS35489-46S	111- 23
MS35489-48	111- 21
MS35489-6	58- 20
MS35489-6	60- 27
MS35489-6	63- 27
MS35489-6	120- 64
MS35489-7S	87- 18

PART NUMBER	FIGURE AND INDEX NO.
MS35489-7S	88- 55
MS35489-8	31- 26
MS35489-9	73- 52
M74CR524-12E	120B- 19
M74CR524-12E	120C- 20
NAS-222-7	6- 29
NAS-395-13-3	70- 12
NAS-395-14-3	70- 13
NAS-395-6-3	16- 88
NAS-43-4-42	107- 39
NAS145-35	38- 28
NAS145-45	38- 21
NAS146-35	38- 26
NAS146-47	38- 18
NAS178-10-6	23- 85
NAS178-8-5	26- 1
NAS178-8-7	23- 38
NAS178-8-7	23- 83
NAS178-8-7	24- 54
NAS178-8-7	24- 61
NAS179-10	23- 86
NAS179-8	23- 39
NAS179-8	23- 84
NAS179-8	24- 55
NAS179-8	24- 62
NAS179-8	26- 2
NAS220-5	44- 22
NAS220-5	46- 22
NAS220-5	46A- 24
NAS220-5	48A- 1
NAS220-6	12A- 29
NAS220-6	39- 23
NAS220-6	10A- 36
NAS220-8	124A- 11
NAS220-8	126- 47
NAS221-10	65- 3
NAS221-5	120A- 57
NAS221-5	120C- 49
NAS221-8	72- 13
NAS221-8	72- 27
NAS221-9	39- 26
NAS221C-6	124A- 24
NAS222-15	22- 31
NAS222-17	21- 32
NAS222-5	124- 17
NAS222-7	6- 11
NAS224-15	10- 1
NAS228-4	33- 10
NAS229-8	7- 32
NAS288-35LH	107- 10
NAS288-35RH	107- 11
NAS296-4A = 4.20	11- 28
NAS296-4A	11- 29
NAS382-1	109- 22
NAS382-1	109- 27
NAS382-1	109- 43
NAS382-1	110- 29
NAS382-1	121- 32
NAS382-2	107- 51
NAS382-2	109- 48
NAS395-1-3	37- 13
NAS395-1-3	112- 3
NAS395-1-3	114- 20
NAS395-10-3	37- 3
NAS395-10-3	11- 58
NAS395-11-3	82- 4
NAS395-12-3	19- 20
NAS395-12-3	19- 22
NAS395-12-3	20- 20
NAS395-12-3	20- 22
NAS395-12-3	28- 15
NAS395-12-3	53- 34
NAS395-12-3	53- 34
NAS395-12-3	67- 41
NAS395-12-3	68- 40

PART NUMBER	FIGURE AND INDEX NO.
NAS395-12-3	69- 47
NAS395-12-3	70- 44
NAS395-12-3	81A- 24
NAS395-13-3	8- 37
NAS395-13-3	67- 12
NAS395-13-3	68- 10
NAS395-13-3	69- 11
NAS395-14-3	16- 34
NAS395-14-3	17- 60
NAS395-14-3	19- 33
NAS395-14-3	20- 32
NAS395-14-3	21- 27
NAS395-14-3	22- 23
NAS395-14-3	33- 45
NAS395-14-3	37- 2
NAS395-14-3	2B- 27
NAS395-14-3	5- 13
NAS395-14-3	67- 9
NAS395-14-3	67- 22
NAS395-14-3	68- 8
NAS395-14-3	68- 19
NAS395-14-3	69- 9
NAS395-14-3	70- 4
NAS395-14-3	71- 3
NAS395-14-3	71- 14
NAS395-14-3	85- 24
NAS395-14-3	121- 45
NAS395-16-3	25- 13
NAS395-16-3	26- 8
NAS395-16-3	26- 9
NAS395-16-3	50- 27
NAS395-16-3	2B- 4
NAS395-16-3	81- 10
NAS395-16-3	81- 19
NAS395-16-3	81A- 6
NAS395-17-3	37- 6
NAS395-17-3	1- 16
NAS395-17-3	1A- 13
NAS395-18-3	33- 41
NAS395-18-3	33- 53
NAS395-18-3	1- 22
NAS395-18-3	1A- 19
NAS395-19-3	84- 20
NAS395-28-3	38- 57
NAS395-3-3	19- 13
NAS395-3-3	20- 13
NAS395-3-3	21- 16
NAS395-3-3	22- 14
NAS395-5-3	16- 75
NAS395-5-3	17- 38
NAS395-5-3	120B- 66
NAS395-5-3	120C- 37
NAS395-6-3	11- 63
NAS395-6-3	17- 49
NAS395-6-3	28- 9
NAS395-6-3	33- 37
NAS395-6-3	33- 54
NAS396-1	43- 38
NAS396-1	45- 33
NAS396-6-3	84- 16
NAS397-12	96- 5
NAS397-12	96- 11
NAS397-14	6A- 13
NAS397-14	96A- 1
NAS397-14	120D- 12
NAS397-14	120D- 16
NAS397-14	120D- 18
NAS397-14	120D- 20
NAS397-14	6A- 13
NAS397-14-1	6- 19
NAS397-14-1	6A- 11
NAS397-14-1	93- 13
NAS397-14-1	93- 16
NAS397-14-1	93- 27
NAS397-14-1	94- 12

PART NUMBER	FIGURE AND INDEX NO.
NAS397-14-1	94- 15
NAS397-14-1	94- 26
NAS397-14-1	95- 12
NAS397-14-1	95- 15
NAS397-14-1	95- 26
NAS397-14-1	96- 7
NAS397-14-1	97- 9
NAS397-14-1	6A- 17
NAS397-16-1	6- 22
NAS397-16-1	6A- 21
NAS397-16-1	77- 58
NAS397-16-1	84- 22
NAS397-16-1	97- 7
NAS397-16-1	6- 20
NAS397-16-1	96- 6
NAS397-18-1	40- 44
NAS397-18-1	40A- 48
NAS397-18-1	77- 14
NAS397-18-1	84- 18
NAS397-32	85- 36
NAS397-50-1	85- 37
NAS397-50-1	85- 38
NAS397-50-1	85- 39
NAS397-50-1	85- 40
NAS397-50-1	85-40B
NAS398-42	76- 77
NAS398-42	77- 87
NAS398-42-1	77- 50
NAS398-50	76- 74
NAS398-50	77- 85
NAS42-4-16	109- 67
NAS42-4-2	49- 15
NAS42-4-8	49- 14
NAS42-6-8	89- 36
NAS42HT-5-36	109- 66
NAS428H3-10	24- 53
NAS428H3-6	23- 82
NAS43-3-12	89- 41
NAS43-3-124	71- 61
NAS43-3-20	73- 53
NAS43-3-256	126- 68
NAS43-3-34	44-36A
NAS43-3-34	46-34A
NAS43-3-6	57A- 3
NAS43-3-64	86- 50
NAS43-3-88	91- 23
NAS43-3-9	73- 36
NAS43-3-9	74- 33
NAS43-3-92	126- 68
NAS43-4-10	109- 50
NAS43-4-12	57- 25
NAS43-4-128	73- 30
NAS43-4-14	56- 20
NAS43-4-16	107- 37
NAS43-4-16	107- 46
NAS43-4-168	74- 37
NAS43-4-20	54- 36
NAS43-4-20	55- 30
NAS43-4-28	107- 38
NAS43-4-47	57- 23
NAS43-7-237	109- 56
NAS43DD-18	63A- 69
NAS43DD-3-14	63- 60
NAS43DD-3-14	63A- 61
NAS43DD-3-16	87- 28
NAS43DD-3-16	88- 30
NAS43DD-3-27	47- 17
NAS43DD-4-56	111- 18
NAS43DD3-20	62- 8
NAS43DD3-32	62- 8
NAS43DD3-50	62- 8
NAS43DD3-56	99A- 10
NAS434D10	65- 18
NAS434D8	65- 18
NAS435-6D	95-39C

PART NUMBER	FIGURE AND INDEX NO.
NAS435D4	112- 12
NAS435D8	111- 26
NAS444-1	28- 8
NAS444-1	114- 32
NAS444-14	16- 5
NAS444-14	17- 55
NAS444-14	2- 12
NAS444-14	2- 17
NAS444-14	3- 2
NAS444-14	3- 6
NAS444-14	3- 18
NAS444-14	5- 14
NAS444-14-3	3A- 21
NAS444-14-3	5A- 20
NAS444-2	19- 19
NAS444-2	20- 19
NAS444-2	28- 2
NAS444-2	11- 35
NAS444-4	30- 8
NAS444-4	30- 9
NAS444-4	45- 43
NAS444-4	2- 34
NAS444-4	2- 58
NAS444-4	2A- 23
NAS444-4	2A- 45
NAS444-4	5- 22
NAS444-4	81- 60
NAS444-4	111- 16
NAS444-4	111- 17
NAS444-4	111- 18
NAS444-4	111- 19
NAS444-4	125- 14
NAS444-4	125- 18
NAS444-4	125- 24
NAS444-4	126- 41
NAS444-4	126- 43
NAS444-4	126- 55
NAS444-4-3	2B- 26
NAS446-1-3	50- 7
NAS446-1-3	53- 3
NAS446-1-3	53- 11
NAS446-1-3	58- 64
NAS446-1-3	63A- 97
NAS446-1-3	66- 8
NAS446-1-3	66- 10
NAS446-1-3	81A- 18
NAS446-1-3	114- 28
NAS446-2-3	58- 49
NAS446-2-3	60- 39
NAS446-2-3	63A- 93
NAS446-2-3	76- 63
NAS446-2-3	77- 67
NAS446-2-3	78- 28
NAS446-2-3	78- 36
NAS446-2-3	78- 47
NAS446-2-3	79- 10
NAS446-2-3	79- 46
NAS446-2-3	80- 4
NAS446-2-3	80- 8
NAS446-2-3	80- 14
NAS446-2-3	80- 18
NAS446-2-3	80- 31
NAS446-2-3	80- 54
NAS446-2-3	110- 9A
NAS446-2-3	111- 2
NAS446-2-3	114- 6
NAS446-2-3	114- 9
NAS446-2-3	114- 14
NAS446-2-3	114- 25
NAS446-2-3	114- 45
NAS446-3-3	37- 19
NAS446-3-3	53- 41
NAS446-3-3	64- 3
NAS446-3-3	64- 10
NAS446-3-3	64- 21

PART NUMBER	FIGURE AND INDEX NO.
NAS446-3-3	64- 27
NAS446-4-3	31- 5
NAS446-4-3	31- 10
NAS446-4-3	31- 15
NAS446-4-3	31- 20
NAS446-4-3	31- 25
NAS446-4-3	31- 30
NAS446-4-3	31- 36
NAS446-4-3	31A- 5
NAS446-4-3	31A- 9
NAS446-4-3	31A- 13
NAS446-4-3	31A- 18
NAS446-4-3	31A- 22
NAS446-4-3	31A- 26
NAS446-4-3	31A- 31
NAS446-4-3	2- 5
NAS446-4-3	2A- 5
NAS446-4-3	2B- 7
NAS446-4-3	3A- 23
NAS446-4-3	59- 50
NAS446-4-3	59- 68
NAS446-4-3	60- 57
NAS446-4-3	64- 38
NAS446-4-3	73- 10
NAS446-4-3	73- 11
NAS446-4-3	73- 13
NAS446-4-3	74- 10
NAS446-4-3	74- 11
NAS446-4-3	74- 13
NAS446-4-3	74- 45
NAS446-4-3	74- 46
NAS446-4-3	77- 83
NAS446-4-3	78- 30
NAS446-4-3	79- 48
NAS446-4-3	81- 14
NAS446-4-3	81- 37
NAS446-4-3	81- 49
NAS446-4-3	81A- 39
NAS446-4-3	81A- 48
NAS446-4-3	81A- 50
NAS446-4-3	83- 15
NAS446-4-3	84- 3
NAS446-4-3	87- 21
NAS446-4-3	88- 21
NAS446-4-3	90- 2
NAS446-4-3	96-41A
NAS446-4-3	96- 47
NAS446-4-3	96A- 41
NAS446-4-3	96A- 46
NAS446-4-3	99- 24
NAS446-4-3	99- 36
NAS446-4-3	101- 6
NAS446-4-3	101- 6A
NAS446-4-3	111- 25
NAS446-4-3	111- 35
NAS446-4-3	111A- 13
NAS446-4-3	111B- 9
NAS446-4-3	114- 31
NAS446-4-3	120- 36
NAS446-4-3	120B- 55
NAS446-4-3	120C- 86
NAS446-4-3	124-21A
NAS446-4-3	124A- 18
NAS446-5-3	75- 58
NAS446-5-3	76- 51
NAS446-5-3	77- 55
NAS450-10S	35- 29
NAS450-10S	36- 20
NAS455-163C4-8	7- 20
NAS464-3-22	41- 71
NAS464-3-22	41A- 35
NAS482-2-3	61- 10
NAS506-4	13- 37
NAS514P1032-14	44-36A
NAS514P1032-14	46-34A

PART NUMBER	FIGURE AND INDEX NO.
NAS557-4A	31A- 14
NAS557-4A	31A- 23
NAS557-6A	31A- 10
NAS557-6A	31A- 19
NAS557-8A	31A- 6
NAS557-8A	31A- 27
NAS561-C2-10	96- 22
NAS561-2-10	96A- 20
NAS561-2C-10	97- 19
NAS561-3-16	140- 4
NAS561-3-18	43- 21
NAS561-3-18	44- 16
NAS561-3-18	45- 21
NAS561-3-18	46- 16
NAS561-3-18	46A- 20
NAS561-3-8 — 3.C7	139- 7
NAS561-5-12	87- 33
NAS561-5-12	88- 37
NAS561-6-18	56B- 25
NAS561-6-18	56B- 27
NAS561-6-18	56B- 53
NAS561C2-10	56A- 28
NAS561C2-10	56A- 36
NAS561C2-8	85- 47
NAS561C3-10	56B- 22
NAS561C3-10	56B- 67
NAS561C3-12	56A- 25
NAS561C3-12	56B- 68
NAS561P3-6	57- 18
NAS561P3-7	44-36C
NAS561P3-7	46-34C
NAS561P3-8	56B- 38
NAS561P4-10	56B- 44
NAS561P4-12	56B- 50
NAS561P4-14	131- 5
NAS561P4-8	56B- 48
NAS561P4-8	138- 3
NAS603-10	56B- 12
NAS603-16	56A- 40
NAS669-131	131- 16
NAS669-131	131- 17
NAS669-212	129- 37
NAS670-275	41- 33
NAS670-275	41A- 25
NAS680A08	16- 76
NAS680A08	17- 39
NAS680A08	33- 47
NAS680A08	49- 27
NAS680A08	3- 24
NAS680A08	3A- 13
NAS680A08	81A- 8
NAS680A08	81A- 11
NAS680A3	14- 27
NAS680A3	15- 24
NAS680A3	16- 29
NAS680A3	16- 75
NAS680A3	17- 15
NAS680A3	17- 16
NAS680A3	17- 38
NAS680A3	17- 39
NAS680A3	23- 10
NAS680A3	23- 11
NAS680A3	23- 17
NAS680A3	23- 28
NAS680A3	23- 34
NAS680A3	24- 9
NAS680A3	24- 19
NAS680A3	24- 29
NAS680A3	24- 53
NAS680A3	25- 7
NAS680A3	25- 31
NAS680A3	26- 13
NAS680A3	26- 21
NAS680A3	32- 16
NAS680A3	8- 27

PART NUMBER	FIGURE AND INDEX NO.
NAS680A3	72- 11
NAS680A3	72- 25
NAS680A3	75- 30
NAS680A3	80- 6
NAS680A3	80- 10
NAS680A3	80- 40
NAS680A3	80- 43
NAS680A3	108- 41
NAS680A3	125- 3
NAS680A3	125- 26
NAS680A3	126- 49
NAS680A3	126- 61
NAS680A4	25- 30
NAS680A4	32- 17
NAS680A4	34- 3
NAS680A4	65- 7
NAS680A4	122- 27
NAS680A4	123- 26
NAS680A5	10- 14
NAS682A08	25- 16
NAS682A08	26- 7
NAS682A3	78- 14
NAS682A3	78- 17
NAS682A3	78- 21
NAS682A4	23- 44
NAS682A4	23- 51
NAS682A4	55- 17
NAS684A08	68- 22
NAS684A08	68- 53
NAS684A3	68- 21
NAS684A3	68- 52
NAS684A4	12A- 19
NAS684A4	12A- 21
NAS686A3	13- 18
NAS686A3	39- 45
NAS686A3	39- 45
NAS687A3	25- 16
NAS687A3	26- 7
NAS696A08K	12A- 24
NAS696A08K	10A- 20
NAS696A3K	124A- 20
NAS696A4	56A- 10
NAS697A08	12A- 26
NAS697A08	48A- 3
NAS697A08K	12A- 9A
NAS697A08K	12A- 8
NAS697A08K	12A- 25
NAS697A08K	10A- 20
NAS697A08K	10A- 30
NAS697A3	16- 75
NAS697A3	17- 38
NAS697A4	16- 75
NAS697A4	17- 38
NAS698A08K	10A- 18
NAS70A-128-313	48A- 27
NAS75-3-009	40- 16
NAS75-3-009	40A- 16
NAS75-3-016	40- 16
NAS77-3-23	41- 82
NAS77-3-23	41A- 46
NAS77-6-88	41- 69
NAS77-6-88	41- 81
NAS77-6-88	41A- 33
NAS77-6-88	41A- 45
NAS77-8-88	41- 59
NO.7	124A- 26
PA-2	63A- 52
PA-2	63- 52
PB55	99- 29
PDM-50	63- 46
PDM-50	63A- 46
PDM-50	111- 4
PDM50	60- 5
PSM-10N	113- 15
PSM-15N	99- 7

PART NUMBER	FIGURE AND INDEX NO.
PSM10N	60- 3
PSM10N	60- 6
PSM10N	63- 48
PSM10N	63- 49
PSM10N	63- 50
PSM10N	63- 51
PSM10N	63A- 48
PSM10N	63A- 49
PSM10N	63A- 50
PSM10N	63A- 51
PSM15N	60- 3
PSM15N	63- 47
PSM15N	63A- 47
PSM20N	60- 4
PSM25N	60- 4
PSM35N	58- 2
PSM35N	60- 5
PSM35N	63- 46
PSM5N	60- 3
P116-499-10-24A	64- 15
P116-499-10-24A	64- 32
QS100-M10S	96A- 1
R-3-M	112- 1
R4G	71A- 31
R4G	71A- 39
R4G	71A- 6A
R4G	71A- 30
R4G	71A- 29
S-1003-12A	85- 3
S-1003-43A	89- 26
S-1003-9A	138- 19
S-1021A-4-10C	59- 2
S-1021A-4-6	53- 16
S-1021A-4-6	53- 18
S-1021Z-10-10	65- 16
S-1021Z-10-10	77- 15
S-1021Z-10-10	77- 59
S-1021Z-10-10	77- 83
S-1021Z-10-10	95-18A
S-1021Z-10-10	95- 23
S-1021Z-10-10	120D- 23
S-1021Z-10-12	77- 88
S-1021Z-10-6	38- 56
S-1021Z-10-6	75- 59
S-1021Z-10-6	95-17A
S-1021Z-10-8	75- 52
S-1021Z-10-8	76- 51
S-1021Z-10-8	76- 55
S-1021Z-10-8	77- 55
S-1021Z-10-8	93- 24
S-1021Z-10-8	94- 18
S-1021Z-10-8	94- 23
S-1021Z-10-8	95-19B
S-1021Z-10-8	95-20A
S-1021Z-10-8	120D- 22
S-1021Z-10-8	122- 50
S-1021Z-10-8	123- 49
S-1021Z-2-4	98- 36
S-1021Z-4-4	43- 25
S-1021Z-4-4	44- 18
S-1021Z-4-4	45- 23
S-1021Z-4-4	46- 18
S-1021Z-4-4	46A- 22
S-1021Z-4-4	52- 3
S-1021Z-4-4	52- 5
S-1021Z-4-4	52- 8
S-1021Z-4-4	53- 29
S-1021Z-4-4	60- 2
S-1021Z-4-4	110- 8
S-1021Z-4-4	114- 19
S-1021Z-4-4B	63- 8
S-1021Z-4-5	59- 59
S-1021Z-4-5	122- 2
S-1021Z-4-6	25- 34
S-1021Z-4-6	50- 7

PART NUMBER	FIGURE AND INDEX NO.
S-1021Z-4-6	50- 9
S-1021Z-4-6	50- 11
S-1021Z-4-6	52- 2
S-1021Z-4-6	56- 8
S-1021Z-4-6	56B- 18
S-1021Z-4-6	57- 21
S-1021Z-4-6	58- 63
S-1021Z-4-6	58- 66
S-1021Z-4-6	63A- 96
S-1021Z-4-6	66- 7
S-1021Z-4-6	66- 10
S-1021Z-4-6	96- 47
S-1021Z-4-6	96A- 46
S-1021Z-4-6	103- 25
S-1021Z-4-6	114- 27
S-1021Z-4-6	124A- 16
S-1021Z-4-6B	63A- 10
S-1021Z-4-8	37- 12
S-1021Z-4-8	50- 24
S-1021Z-4-8	53- 3
S-1021Z-4-8	53- 11
S-1021Z-6-4	19- 14
S-1021Z-6-4	20- 14
S-1021Z-6-4	21- 15
S-1021Z-6-4	22- 15
S-1021Z-6-4	54- 15
S-1021Z-6-4	54- 16
S-1021Z-6-4	57- 8
S-1021Z-6-4	57- 8
S-1021Z-6-4	93- 44
S-1021Z-6-6	43- 11
S-1021Z-6-6	45- 11
S-1021Z-6-6	46- 43
S-1021Z-6-6	53- 13
S-1021Z-6-6	53- 22
S-1021Z-6-6	53- 38
S-1021Z-6-6	53- 41
S-1021Z-6-6	11- 52
S-1021Z-6-6	11- 62
S-1021Z-6-6	58- 22
S-1021Z-6-6	58- 41
S-1021Z-6-6	58- 48
S-1021Z-6-6	59- 20
S-1021Z-6-6	59- 42
S-1021Z-6-6	60- 29
S-1021Z-6-6	60- 32
S-1021Z-6-6	60- 38
S-1021Z-6-6	63- 29
S-1021Z-6-6	63A- 92
S-1021Z-6-6	64- 2
S-1021Z-6-6	64- 9
S-1021Z-6-6	64- 20
S-1021Z-6-6	64- 26
S-1021Z-6-6	76- 62
S-1021Z-6-6	77- 66
S-1021Z-6-6	78- 27
S-1021Z-6-6	78- 35
S-1021Z-6-6	79- 10
S-1021Z-6-6	79- 45
S-1021Z-6-6	80- 3
S-1021Z-6-6	80- 8
S-1021Z-6-6	80- 13
S-1021Z-6-6	80- 17
S-1021Z-6-6	80- 30
S-1021Z-6-6	80- 53
S-1021Z-6-6	96- 15
S-1021Z-6-6	96A- 5
S-1021Z-6-6	110- 9
S-1021Z-6-6	111- 2
S-1021Z-6-6	111- 36
S-1021Z-6-6	114- 1
S-1021Z-6-6	114- 8
S-1021Z-6-6	114- 13
S-1021Z-6-6	114- 38
S-1021Z-6-6	123- 2

PART NUMBER	FIGURE AND INDEX NO.
S-1021Z-6-6	124- 27
S-1021Z-6-6C	9- 16
S-1021Z-6-8	28- 10
S-1021Z-6-8	52- 1
S-1021Z-6-8	52- 29
S-1021Z-6-8	11- 60
S-1021Z-6-8	10- 43
S-1021Z-6-8	56- 29
S-1021Z-6-8	56A- 38
S-1021Z-6-8	98- 42
S-1021Z-6-8	110- 6
S-1021Z-6-8	114- 5
S-1021Z-6-8	114- 24
S-1021Z-6-8	114- 44
S-1021Z-6-8	120- 33
S-1021Z-6-8	120A- 34
S-1021Z-6-8	120A- 71
S-1021Z-6-8	120B- 53
S-1021Z-6-8	120B- 66
S-1021Z-6-8	120C- 48
S-1021Z-6-8	120C- 51
S-1021Z-6-8	120C- 63
S-1021Z-6-8C	84- 27
S-1021Z-8-10	52- 20
S-1021Z-8-10	52- 29
S-1021Z-8-10	84- 20
S-1021Z-8-10	86- 11
S-1021Z-8-10	97- 27
S-1021Z-8-10	99- 35
S-1021Z-8-10	120- 36
S-1021Z-8-10	120B- 55
S-1021Z-8-10C	52- 20
S-1021Z-8-14	52- 17
S-1021Z-8-24	111- 18
S-1021Z-8-4	121- 10
S-1021Z-8-4	121- 15
S-1021Z-8-4	122- 12
S-1021Z-8-4	122- 17
S-1021Z-8-6	14- 30
S-1021Z-8-6	15- 26
S-1021Z-8-6	28- 14
S-1021Z-8-6	28- 17
S-1021Z-8-6	31- 4
S-1021Z-8-6	31- 9
S-1021Z-8-6	31- 14
S-1021Z-8-6	31- 19
S-1021Z-8-6	31- 24
S-1021Z-8-6	31- 29
S-1021Z-8-6	31- 35
S-1021Z-8-6	31A- 4
S-1021Z-8-6	31A- 17
S-1021Z-8-6	31A- 25
S-1021Z-8-6	1- 16
S-1021Z-8-6	1- 40
S-1021Z-8-6	1A- 13
S-1021Z-8-6	1A- 32
S-1021Z-8-6	10A- 41
S-1021Z-8-6	58- 70
S-1021Z-8-6	59- 49
S-1021Z-8-6	59- 67
S-1021Z-8-6	60- 56
S-1021Z-8-6	62- 16
S-1021Z-8-6	63- 13
S-1021Z-8-6	63A- 16
S-1021Z-8-6	64- 37
S-1021Z-8-6	69- 3
S-1021Z-8-6	70- 3
S-1021Z-8-6	73- 10
S-1021Z-8-6	73- 11
S-1021Z-8-6	73- 14
S-1021Z-8-6	73- 45
S-1021Z-8-6	74- 10
S-1021Z-8-6	74- 11
S-1021Z-8-6	74- 13
S-1021Z-8-6	74- 44

PART NUMBER	FIGURE AND INDEX NO.
S-1021Z-8-6	74- 45
S-1021Z-8-6	74- 46
S-1021Z-8-6	78- 30
S-1021Z-8-6	78- 47
S-1021Z-8-6	81- 13
S-1021Z-8-6	81- 48
S-1021Z-8-6	81A- 5
S-1021Z-8-6	81A- 17
S-1021Z-8-6	81A- 47
S-1021Z-8-6	84- 4
S-1021Z-8-6	86- 18
S-1021Z-8-6	86- 39
S-1021Z-8-6	93- 21
S-1021Z-8-6	94- 20
S-1021Z-8-6	96-41A
S-1021Z-8-6	96A- 41
S-1021Z-8-6	99- 24
S-1021Z-8-6	101- 6
S-1021Z-8-6	111- 16
S-1021Z-8-6	111- 17
S-1021Z-8-6	111- 19
S-1021Z-8-6	111- 24
S-1021Z-8-6	111- 25
S-1021Z-8-6	111- 35
S-1021Z-8-6	112- 2
S-1021Z-8-6	112- 13
S-1021Z-8-6	121- 44
S-1021Z-8-6	124- 21
S-1021Z-8-6	139- 20
S-1021Z-8-6B	53- 11
S-1021Z-8-7	81- 9
S-1021Z-8-7	81- 19
S-1021Z-8-7	81- 36
S-1021Z-8-7	81A- 24
S-1021Z-8-7	81A- 38
S-1021Z-8-7	81A- 50
S-1021Z-8-8	14- 26
S-1021Z-8-8	31A- 8
S-1021Z-8-8	31A- 12
S-1021Z-8-8	31A- 21
S-1021Z-8-8	31A- 30
S-1021Z-8-8	37- 4
S-1021Z-8-8	37- 7
S-1021Z-8-8	37- 18
S-1021Z-8-8	38- 2
S-1021Z-8-8	39- 2
S-1021Z-8-8	39- 13
S-1021Z-8-8	44- 47
S-1021Z-8-8	45- 39
S-1021Z-8-8	46- 49
S-1021Z-8-8	50- 27
S-1021Z-8-8	52- 14
S-1021Z-8-8	52- 31
S-1021Z-8-8	53- 34
S-1021Z-8-8	53- 34
S-1021Z-8-8	11- 59
S-1021Z-8-8	1- 13
S-1021Z-8-8	1- 18
S-1021Z-8-8	1- 27
S-1021Z-8-8	1A- 11
S-1021Z-8-8	1A- 12
S-1021Z-8-8	1A- 15
S-1021Z-8-8	1A- 42
S-1021Z-8-8	2- 4
S-1021Z-8-8	2- 51
S-1021Z-8-8	2- 58
S-1021Z-8-8	2A- 4
S-1021Z-8-8	2A- 45
S-1021Z-8-8	2B- 4
S-1021Z-8-8	2B- 6
S-1021Z-8-8	2B- 46
S-1021Z-8-8	3A- 23
S-1021Z-8-8	6- 51
S-1021Z-8-8	8- 36
S-1021Z-8-8	10- 42

PART NUMBER	FIGURE AND INDEX NO.
S-1021Z-8-8	65- 19
S-1021Z-8-8	73- 20
S-1021Z-8-8	73- 43
S-1021Z-8-8	74- 28
S-1021Z-8-8	74- 45
S-1021Z-8-8	75- 15
S-1021Z-8-8	75- 22
S-1021Z-8-8	76- 15
S-1021Z-8-8	76- 22
S-1021Z-8-8	76- 78
S-1021Z-8-8	77- 88
S-1021Z-8-8	79- 47
S-1021Z-8-8	83- 14
S-1021Z-8-8	84- 2
S-1021Z-8-8	84- 15
S-1021Z-8-8	85- 23
S-1021Z-8-8	85- 28
S-1021Z-8-8	85- 30
S-1021Z-8-8	86- 8
S-1021Z-8-8	86- 10
S-1021Z-8-8	86- 30
S-1021Z-8-8	86- 55
S-1021Z-8-8	87- 20
S-1021Z-8-8	88- 20
S-1021Z-8-8	90- 2
S-1021Z-8-8	93- 19
S-1021Z-8-8	95-39B
S-1021Z-8-8	96- 16
S-1021Z-8-8	96A- 6
S-1021Z-8-8	96A- 14
S-1021Z-8-8	97- 4
S-1021Z-8-8	97- 13
S-1021Z-8-8	98- 35
S-1021Z-8-8	101- 5
S-1021Z-8-8	111- 26
S-1021Z-8-8	111- 30
S-1021Z-8-8	111A- 12
S-1021Z-8-8	111B- 9
S-1021Z-8-8	114- 30
S-1021Z-8-8	114- 50
S-1021Z-8-8	120A- 73
S-1021Z-8-8	120C- 85
S-1021Z-8-8	124-21A
S-1021Z-8-8	124A- 18
S-1021Z-8-8	125- 15
S-1021Z-8-8	125- 17
S-1021Z-8-8	125- 23
S-1021Z-8-8	126- 40
S-1021Z-8-8	126- 43
S-1021Z-8-8	126- 56
S-1021Z-8-8	96- 9
S-1021Z-8-8	6A- 19
S-1021Z-8-8	6A- 19
S-1022Z-4-12B	63A- 69
S-1022Z-4-4	53- 4
S-1022Z-4-4	53- 5
S-1022Z-6-10	56B- 19
S-1022Z-6-6	43- 37
S-1022Z-6-6	45- 32
S-1022Z-6-8	120C- 37
S-1022Z-8-6	1- 23
S-1022Z-8-6	1A- 20
S-1022Z-8-8	1- 11
S-1022Z-8-8	1- 11
S-1022Z-8-8	1- 12
S-1022Z-8-8	1- 38
S-1022Z-8-8	1A- 30
S-1022Z-8-8	6- 30
S-1022Z-8-8	67- 1
S-1022Z-8-8	67- 26
S-1022Z-8-8	68- 1
S-1022Z-8-8	68- 23
S-1022Z-8-8	69- 1
S-1022Z-8-8	69- 20
S-1022Z-8-8	70- 1

PART NUMBER	FIGURE AND INDEX NO.
S-1022Z-8-8	70- 20
S-1022Z-8-8	71- 1
S-1022Z-8-8	71- 19
S-1022Z-8-8	120C- 66
S-1023A-4-6	38- 54
S-1023A-4-6	52- 9
S-1023A-4-6	53- 8
S-1023A-4-6	53- 9
S-1023A-4-6C	53- 12
S-1023A-4-6C	53- 12
S-1023A-4-6C	58- 68
S-1023A-4-6C	59- 62
S-1023Z-4-8C	50- 24
S-1023Z-6-6	43- 11
S-1023Z-6-6	44- 45
S-1023Z-6-6	45- 11
S-1046-13-3.00	76- 24
S-1048-2	5A- 19
S-1050-1-3.15	122- 74
S-1053E16T	85- 35
S-1053E16W	85- 35
S-1053E20T	75- 39
S-1053E24T	84- 31
S-1053E24T	85- 37
S-1053E24T	85- 39
S-1053E8T	84- 17
S-1053E8T	84- 21
S-1053K20T	75- 40
S-1053K20T	76- 41
S-1053K20T	76- 76
S-1053K20T	77- 49
S-1053K20T	77- 85
S-1053K20T	77- 86
S-1053K24T	76- 73
S-1053K24T	76- 73
S-1053K24T	77- 84
S-1053K24T	85- 38
S-1053K24T	85- 40
S-1053K24T	85-40A
S-1053K8T	84- 21
S-1055-1-2.25	114- 47
S-1060-1	57- 22
S-1060-11	57- 22
S-1060-12	54- 34
S-1060-14	57- 22
S-1060-15	55- 28
S-1060-2	57- 22
S-1060-3	55- 28
S-1060-4	55- 28
S-1060-8	57- 22
S-1060-9	54- 34
S-1066B1	52- 9
S-1066C1	53- 12
S-1071-1	2A- 43
S-1071-1	2B- 3
S-1071-1	92- 10
S-1071-1	92- 16
S-1071-1	92- 17
S-1071-1	92- 24
S-1071-1	92- 28
S-1071-1	92- 34
S-1071-1	92- 36
S-1071-1	2- 56
S-1072-1	120A- 72
S-1072-1	120C- 65
S-1074-1	56A- 6
S-1074-1	56B- 7
S-1078-3	27- 3
S-1079-1-144	43- 27
S-1079-1-144	45- 25
S-1082-1	43- 45
S-1082-1	44- 33
S-1082-1	45- 51
S-1082-1	46- 31
S-1090-18	111- 37

PART NUMBER	FIGURE AND INDEX NO.
S-1091-2	111- 37
S-1093-1	8- 38
S-1095-2	31A- 16
S-1095-2	31A- 24
S-1095-3	31A- 11
S-1095-3	31A- 20
S-1095-4	31A- 7
S-1095-4	31A- 29
S-1102-1	63- 10
S-1102-1	63A- 13
S-1103-1	58- 1
S-1106-3	7- 12
S-1106-3	8- 12
S-1106-4	73- 38
S-1106-4	74- 35
S-1107-3	40- 27
S-1107-3	40A- 27
S-1112-1	14- 30
S-1112-1	15- 26
S-1112-1	127- 18
S-1112-1	128- 23
S-1115-10	111B- 13
S-1115-19	111B- 11
S-1115-20	111B- 13
S-1117-24	38- 35
S-1117-24	39- 47
S-1130-1	22- 51
S-1130-1	2- 56
S-1130-1	2A- 43
S-1130-1	2B- 3
S-1130-1	92- 10
S-1130-1	92- 16
S-1130-1	92- 24
S-1130-1	92-28B
S-1130-1	92- 34
S-1130-1	92- 36
S-1130-1	92- 41
S-1131-1	2- 56
S-1131-1	2A- 43
S-1131-1	2B- 3
S-1131-1	92- 10
S-1131-1	92- 16
S-1131-1	92- 17
S-1131-1	92- 24
S-1131-1	92-28A
S-1131-1	92-28B
S-1131-1	92- 34
S-1131-1	92- 36
S-1132-1	2B- 3
S-1132-1	92- 36
S-1133-1	92- 41
S-1135-1	22- 51
S-1135-1	92- 34
S-1138-1	92- 10
S-1139-1	92- 16
S-1139-1	92- 24
S-1146-1	56B- 65
S-1152-1	43- 49
S-1152-1	44- 43
S-1152-1	45- 55
S-1152-1	46- 41
S-1153-1	1A- 40
S-1155-2	37- 17
S-1155-3	2B- 5
S-1167-10-0404	99A- 7
S-1167-10-0404	99A- 8
S-1167-4-0080	87- 2
S-1167-4-0080	88- 2
S-1167-4-0100	38- 47
S-1167-4-0100	87- 1
S-1167-4-0100	87- 1
S-1167-4-0100	87- 1
S-1167-4-0100	88- 1
S-1167-4-0100	88- 1
S-1167-4-0100	88- 1

PART NUMBER	FIGURE AND INDEX NO.
S-1167-4-0388	77- 80
S-1167-4-0388	99- 3A
S-1167-4-34	99- 32
S-1167-8-0120	96- 45
S-1167-8-0120	96A- 45
S-1167-8-0120	100- 16
S-1168-2-10	93- 46
S-1168-2-10	93- 51
S-1168-2-10	94- 40
S-1168-2-10	95- 40
S-1168-2-15	94- 36
S-1168-2-15	95- 36
S-1168-2-15	95- 36
S-1168-2-18	93- 49
S-1168-2-22	120A- 50
S-1168-2-22	120C- 21
S-1168-2-23	94- 53
S-1168-2-23	120- 13
S-1168-2-23	120B- 21
S-1168-4-11	99- 15
S-1168-4-13	99- 15
S-1168-4-16	99- 15
S-1168-6-12	93- 28
S-1168-6-12	93- 30
S-1168-6-12	94- 27
S-1168-6-12	94- 29
S-1168-6-12	95- 27
S-1168-6-12	95- 29
S-1168-6-14	93- 34
S-1168-6-6 1/2	120D- 25
S-1168-6-61/2	95- 50
S-1168-6-7	95- 27
S-1168-6-7	120D- 7
S-1186-1	73- 21
S-1186-1	74- 20
S-1188-1	6- 36
S-1188-1	67- 15
S-1188-1	67- 57
S-1188-1	68- 13
S-1188-1	68- 56
S-1188-1	69- 14
S-1188-1	69- 55
S-1188-1	70- 15
S-1188-1	70- 42
S-1188-1	71- 11
S-1188-1	71- 43
S-1188-1	71A- 8
S-1188-1	71A- 41
S-1189-1	49- 10
S-1189-2	49- 10
S-1194-14	49- 26
S-1222-1	63- 30
S-1222-1	63A- 30
S-1223-14	74- 29
S-1239-3	63- 42
S-1239-3	63A- 42
S-1239-3	101- 2
S-1239-4	63- 42
S-1239-4	63A- 42
S-1239-4	101- 2
S-1240-5	63- 23
S-1240-5	63A- 28
S-1240-6	63- 32
S-1240-6	63A- 32
S-1243-6	57A- 20
S-1245-1	91- 2
S-1245-1	91- 3
S-1249-1	91- 27
S-1255-3	63A- 12
S-1258-1	92- 47
S-1273-1	52- 37
S-1284-1	63A- 98
S-1286-1	96A- 29
S-1286-2	96A- 29
S-1286-3	96A- 29

PART NUMBER	FIGURE AND INDEX NO.
S-1286-4	96A- 29
S-1300N1	60- 77
S-1300N1	93- 9
S-1300N1	94- 8
S-1300N1	94- 8
S-1300N1	120- 9
S-1300N1	120A- 54
S-1300N1	120B- 18
S-1300N1	120C- 19
S-1300N1	61- 37
S-1300N1	63- 21
S-1300N1	63A- 26
S-1301N1	61- 26
S-1301N1	62- 34
S-1301N1 — 119.96	63- 14
S-1301N1	63A- 17
S-1301N2	61- 26
S-1302N1	61- 40
S-1302N1	62- 37
S-1302N1	63- 70
S-1302N1	63A- 72
S-1304N1	61- 39
S-1304N1	63- 69
S-1304N1	63A- 71
S-1304N2	62- 38
S-1304N2	63- 69
S-1304N2	63A- 71
S-1304N2	92- 3
S-1305N8 21.09	63A- 14
S-1307N2	63- 15
S-1307N2	63A- 20
S-1309N1	62- 41
S-1309N1	63- 79
S-1309N1	63A- 81
S-1309N1	95- 47
S-1313N1	61- 21
S-1313N1	62- 20
S-1313N1	63- 73
S-1313N1	63A- 75
S-1313N1	92- 2
S-1314N1	61- 21
S-1314N1	62- 20
S-1314N1	63- 73
S-1314N1	63- 75
S-1314N1	92- 2
S-1316N1	62- 40
S-1316N1	63- 78
S-1316N1	63A- 80
S-1316N1	95- 47
S-1317N1	63A- 74
S-1320-1	61- 29
S-1320-1	63- 45
S-1320-1	63A- 45
S-1322-1	65- 20
S-1323N2	61- 27
S-1324N2	61- 23
S-1324N2	62- 18
S-1324N2	63- 71
S-1324N2	63A- 73
S-1324N2	123- 64
S-1324N3	62- 18
S-1324N3	63- 71
S-1324N3	63A- 73
S-1324N3	92- 1
S-1325N1	124- 9
S-1326N1	63A- 81
S-1327N1	63A- 80
S-1345-2	130- 16
S-1345-2	130A- 12
S-1345-4	129- 47
S-1363-3	63A- 16
S-1365-1	63A-81A
S-1389-2	27- 3
S-1389-6	27- 2
S-1392N1	63A- 71

PART NUMBER	FIGURE AND INDEX NO.
S-18-30	103- 5
S-202RB	16- 61
S-202RB	18- 8
S-202RB	53- 42
S-202RB	11- 47
S-202RB	11- 50
S-202RB	1- 24
S-202RB	1A- 21
S-202RB	10- 41
S-202RB	11- 42
S-202RB	78- 48
S-202RB	79- 31
S-202RB	79- 32
S-202RB	79- 38
S-202RB	80- 56
S-225-1	14- 23
S-225-1	14- 25
S-225-1	15- 22
S-225-1	1- 13
S-225-1	121- 46
S-225-1	122- 35
S-225-1	123- 34
S-225-1	126- 58
S-225-2	1- 11
S-225-2	1- 11
S-225-2	1- 12
S-225-3	8- 35
S-225-4F	1A- 11
S-225-4F	1A- 11
S-225-5	1A- 12
S-225-6	120A- 73
S-225-6	120C- 66
S-226-2	3- 2
S-226-2	5- 14
S-226-2	5A- 18
S-226-3	16- 34
S-226-3	17- 59
S-226-3	19- 32
S-226-3	20- 31
S-226-3	21- 26
S-226-3	22- 22
S-226-3	33- 44
S-226-5F	3A- 32
S-226-5F	5A- 20
S-237	5- 12
S-237-1	121- 43
S-237-1	122- 34
S-237-1	123- 33
S-237-3	8- 34
S-272-112	16- 9
S-272-207	138- 7
S-272-211	138- 11
S-272-220	138- 14
S-290D832	1- 19
S-290D832	1A- 16
S-290D832	63A- 82
S-292-18	76- 24
S-292-8	75- 24
S-338-6	25- 33
S-338-6	104- 22
S-338-7	32- 22
S-338-7	108- 38
S-338-7	121- 2
S-338-7	122- 3
S-338-7	123- 3
S-339-2	32- 22
S-339-2	108- 38
S-339-2	122- 4
S-339-2	123- 3
S-347-1	19- 34
S-347-1	20- 33
S-347-1	21- 29
S-347-1	22- 28
S-349	16- 36
S-349	16- 70

PART NUMBER	FIGURE AND INDEX NO.
S-349	17- 33
S-349	33- 46
S-349	35- 39
S-349	36- 28
S-349	121- 42
S-349	122- 30
S-349	123- 29
S-350	27- 7
S-350	124- 21
S-351	73- 34
S-351	74- 31
S-351-1	111- 25
S-352	31- 2
S-352	31A- 2
S-353-1	31- 7
S-353-1	31- 12
S-353-1	31- 22
S-353-1	31- 34
S-353-1	111- 19
S-353-1	111- 35
S-353-4	31- 27
S-354-1	31- 3
S-354-1	31- 13
S-354-1	31A- 3
S-354-3	100- 1B
S-354-4	31- 8
S-354-4	31- 23
S-354-4	31- 32
S-354-4	111- 25
S-354-4	111- 35
S-354-5	31- 18
S-354-5	31- 28
S-355	61- 4
S-355	63- 57
S-355	63A- 58
S-355	120- 67
S-363	44- 21
S-363	46- 21
S-363	46A- 23
S-378-1	87- 46
S-378-1	88- 51
S-378-1	110- 22
S-378-1	110- 28
S-378-1	126- 17
S-378-2	1- 14
S-378-2	108- 46
S-378-2	109- 20
S-378-2	109- 25
S-378-2	109- 30
S-378-2	109- 40
S-378-2	121- 29
S-378-3	105- 22
S-378-3	106- 15
S-378-3	126- 32
S-378-3	126- 37
S-378-3	126- 38
S-378-3L	33- 16
S-378-3L	1- 15
S-378-3L	104- 14
S-378-3L	107- 48
S-378-3L	108- 15
S-378-3L	108- 19
S-378-4	104- 10
S-378-4	104- 18
S-378-4	105- 18
S-378-4	105- 25
S-378-4	106- 8
S-378-4	106- 12
S-378-4	107- 13
S-378-4	107- 17
S-378-4	107- 23
S-378-4	107- 29
S-378-4	107- 33
S-378-4	107- 35
S-378-4	109- 46

PART NUMBER	FIGURE AND INDEX NO.
S-378-5	106- 24
S-382-2	63A- 90
S-394	107- 42
S-394	109- 35
S-48143-K2215	14- 28
S-48143-K2215	15- 25
S-51-12	42- 19
S-51-12	75- 13
S-51-12	76- 13
S-51-12	77- 13
S-51-6	96- 3
S-51-8	93- 11
S-51-8	93- 15
S-51-8	93- 25
S-51-8	94- 10
S-51-8	94- 14
S-51-8	94- 24
S-51-8	95- 10
S-51-8	95- 14
S-51-8	95- 24
S-51-8	97- 6
S-51-8	120D- 10
S-51-8	120D- 14
S-51-8	120D- 17
S-51-8	96- 4
S-51-8	6A- 15
SK175-9	41A- 2
SK-180-5	79-
SK-180-8	79-
SK180-1	78-
SK180-6	6- 56
SK182-34	41- 3
SK8054-3	75- 54
SP1101	63- 20
SS48155-K2215	5A- 21
S1K-5	12- 11
S10K75	43- 30
S10K75	45- 27
S10K75	47- 2
S1021Z-6-8	55- 19
S1021Z-8-10	106- 39
S1021Z-8-8	81- 59
S11065-21	41- 27
S11065-21	41A- 18
S11326	131- 12
S353-2	31- 17
TA3-716D9	98- 27
TA732D42	76- 78
TA732D42	77- 87
TA732D42	77- 88
WL98293-2-240	77- 44
WL98293-3-320	77-40A
WRM-10	113- 21
WRM-15	113- 19
WRM-20	113- 24
WRM-25	113- 20
WRM-30	113- 22
WRM-39	113- 24
WRM-44-12	113- 23
X-109488	99-29A
0-470-A	75- 1
0-470-J	75- 1
0-470-K	76- 1
0-470-L	77- 1
0-470-R	77- 1
0310196-10	121- 56
0310196-10	122- 5
0310196-10	123- 4
0310196-11	121- 56
0310196-11	122- 5
0310196-11	123- 4
0310196-12	89- 7
0310196-15	56A- 22
0310196-15	56B- 56
0310196-2	54- 23

PART NUMBER	FIGURE AND INDEX NO.
0310196-2	55- 16
0310196-2	56- 17
0310196-3	121- 56
0310196-4	56- 27
0310196-4	121- 56
0310196-5	89- 6
0310332	139- 6
0310453	89- 1
0310453	89- 31
0311001-27	114- 35
0311001-27	114- 36
0311014-21 14.96	62- 25
0311014-7 20.26	61- 27
0311014-7	62- 33
0311014-7	63- 11
0311014-9	61- 27
0311018-10	61- 31
0311018-10	62- 35
0311018-10	63- 15
0311018-10 -1300	63A- 20
0311018-11	75- 24
0311018-11	76- 24
0311018-11	77- 24
0311020-8	61- 38
0311020-8	62- 39
0311020-8	63- 20
0311020-8	63A- 25
0311029-6	61- 26
0311029-7	61- 26
0311029-7	62- 34
0311029-7	63- 14
0311029-7	63A- 17
0311031-4	58- 14
0311031-4	59- 15
0311031-4	60- 17
0311031-4	73- 19
0311031-4	74- 19
0311031-5	63- 31
0311031-5	63A- 31
0311031-5	73- 19
0311031-5	74- 19
0311038-2	58- 18
0311038-2	59- 16
0311038-2	60- 25
0311038-2	63- 25
0311056-4	62- 40
0311056-4	63- 78
0311056-4	63A- 80
0311056-4	95- 47
0311056-5	61- 35
0311056-5	62- 40
0311056-5	63- 78
0311056-5	63A- 80
0311056-5	93- 53
0311056-5	94- 45
0311056-5	95- 44
0311057-1	60- 77
0311057-1	61- 37
0311057-1	63- 21
0311057-1	63A- 26
0311057-1	93- 9
0311057-1	94- 8
0311057-1	95- 8
0311057-1	120- 9
0311057-1	120R- 18
0311057-2	120A- 54
0311057-2	120C- 19
0311058-1	61- 36
0311058-1	93- 55
0311058-1	94- 47
0311058-4	62- 41
0311058-4	63- 79
0311058-4	63A- 81
0311058-4	95- 46
0311058-5	62- 41

PART NUMBER	FIGURE AND INDEX NO.
0311058-5	63- 79
0311058-5	63A- 81
0311058-5	95- 47
0311070-1	96- 20
0311070-1	96A- 18
0311070-1	97- 17
0311070-1	138-
0311070-2	138- 6
0311071	138- 1
0311072	138- 10
0311073	138- 4
0311075-1	138- 18
0311076	138- 8
0311077	138- 13
0311079	138- 17
0311240-17	6- 46
0311281-3	49- 18
0311284	49- 12
0311310	54- 38
0311310	55- 32
0311310	56- 30
0311310	56A- 31
0311310	56B- 57
0311311	56- 14
0311311-1	54- 24
0311318	49- 11
0311319	49- 31
0311319-1	49- 31
0311319-2	49- 32
0311320	49- 13
0311324	49- 10
0311360-4	6- 47
0311360-5	6- 47
0311414-6	49- 38
0311415	49- 35
0311416	49- 36
0311448-1	49- 24
0311516-3	52- 30
0311516-6	52- 32
0311538-10	63- 23
0311538-10	63A- 28
0311538-10	96- 44
0311538-10	96A- 44
0311538-10	97- 43
0311538-8	58- 23
0311538-8	59- 21
0311538-8	60- 14
0311538-8	96- 44
0311538-8	97- 43
0311586	54- 39
0311586	55- 34
0311586	56- 31
0311586	56A- 32
0311586	56B- 59
0311623-1	52- 3
0311644	54- 22
0311644	55- 11
0311644	56- 12
0311644	56A- 16
0311644	56B- 32
0311710-10	57- 22
0311710-15	57- 22
0311710-6	57- 22
0311710-7	54- 34
0311710-8	57- 22
0311710-9	54- 34
0311752-10	86- 21
0311752-30	86- 33
0311752-5	86- 20
0311752-8	86- 13
0311772-2	86- 52
0311772-3	86- 53
0311772-4	86- 54
0311777	58- 19
0311777	59- 17

PART NUMBER	FIGURE AND INDEX NO.
0311777	60- 26
0311777	63- 26
0311779-17	86- 48
0311779-18	86- 35
0311779-2	86- 3
0311779-2	141-
0311779-26	86- 51
0311779-30	86- 11
0311796	86- 29
0312155-10	111A- 10
0312155-10	111B- 7
0313313-3	59- 66
0313313-3	60- 55
0313313-3	64- 36
0320105	6- 27
0320105	6A- 26
0322526-6	6- 23
0322526-6	6A- 22
0332136-1	11- 45
0341007	121- 1
0341007-5	122- 1
0341118	121- 19
0341118	121- 19
0341118	122- 21
0341118	123- 20
0341118-1	122- 21
0341118-1	121- 19
0341118-1	123- 20
0411007-10	62- 20
0411007-10	63- 73
0411007-10	63A- 75
0411007-10	92- 2
0411007-7	61- 21
0411007-7	62- 20
0411007-7	63- 73
0411007-7	63A- 75
0411007-7	92- 2
0411007-8	61- 21
0411007-8	62- 20
0411007-8	63- 73
0411007-8	63A- 75
0411007-8	92- 2
0411008-2	61- 24
0411009-6	61-
0411009-6	62- 37
0411009-6	63- 70
0411009-6	63A- 72
0411010-1	62- 36
0411010-1	63- 72
0411010-1	63A- 74
0411010-3	61- 34
0411016-3	61- 30
0411016-3	99- 1
0411017-4 ~ 1976	61- 28
0411017-4	99- 5
0411030-4	53- 11
0411030-5	53- 3
0411030-6	53- 3
0411047	103- 6
0411051	107- 6
0411051-4	107- 8
0411059-1	61- 3
0411059-1	63- 54
0411059-1	63A- 54
0411062-4	114- 33
0411062-4	114- 36
0411069-1	62- 38
0411069-1	63- 69
0411069-1	63A- 71
0411069-1	92- 3
0411069-3	61- 39
0411069-3	63- 69
0411069-3	63A- 71
0411086-13	61- 23
0411086-13	92- 1

PART NUMBER	FIGURE AND INDEX NO.
0411086-14	61- 23
0411086-14	63- 71
0411086-14	63A- 73
0411086-14	123- 64
0411086-16	62- 18
0411086-16	63- 71
0411086-16	63A- 73
0411086-16	92- 1
0411086-17	62- 18
0411086-17	123- 64
0411086-21	63- 71
0411086-21	63A- 73
0411086-23	62- 18
0411086-23	63- 71
0411086-23	63A- 73
0411086-23	123- 64
0411087-24	61- 27
0411090-13	58- 10
0411090-13	59- 11
0411090-13	60- 18
0411090-13	85- 16
0411090-22	58- 11
0411090-22	58- 25
0411090-22 ~ 83	58- 27
0411090-22	59- 25
0411090-22	59- 27
0411090-22	60- 13
0411090-22	60- 19
0411090-22	60- 21
0411090-22	60- 69
0411090-22	73- 12
0411090-22	73- 39
0411090-22	74- 12
0411090-22	74- 41
0411090-22	81- 11
0411090-22	81A- 15
0411090-22	85- 15
0411090-29	58- 26
0411090-29	59- 26
0411090-29	60- 15
0411090-29	87-18A
0411090-29	88-18A
0411090-29	101- 2
0411091-19	60- 16
0411091-19	73- 28
0411091-19	74- 29
0411091-8	58- 13
0411091-8	59- 14
0411091-8	73- 28
0411092-1	45- 48
0411092-1	58- 6
0411092-1	58- 7
0411092-1	58- 8
0411092-1	58- 56
0411092-1	59- 7
0411092-1	59- 9
0411092-1	60- 8
0411092-1	60- 9
0411092-1	60- 10
0411092-1	60- 68
0411092-1	63- 37
0411092-1	63- 38
0411092-1	63A- 37
0411092-1	63A- 38
0411092-1	84- 11
0411092-1	85- 33
0411092-1	86- 57
0411092-1	92- 46
0411092-1	113- 13
0411129	23- 3
0411129	24- 7
0411185-7	43- 48
0411185-7	44- 42
0411185-7	45- 54
0411185-7	46- 40

PART NUMBER	FIGURE AND INDEX NO.
0411221-3	103- 1
0411224	58- 38
0411224	59- 37
0411224	59- 39
0411224	60- 63
0411224	60- 65
0411224	63- 74
0411224	63- 76
0411224	63A- 76
0411224	63A- 78
0411225	58- 38
0411225	59- 37
0411225	59- 39
0411225	60- 63
0411225	60- 63
0411225	60- 65
0411225-1	59- 39
0411232	107- 15
0411255	103- 9
0411257	103- 12
0411263	89- 19
0411263-5	89- 20
0411263-6	89- 20
0411264	89- 20
0411264-5	89- 20
0411264-6	89- 20
0411293	52- 25
0411306	89- 24
0411306-1	89- 25
0411306-10	89- 25
0411306-2	89- 25
0411306-3	89- 24
0411306-5	89- 24
0411306-6	89- 25
0411306-9	89- 24
0411307	89- 8
0411307	89- 42
0411326-3	103- 15
0411342	19- 21
0411342	19- 22
0411342	20- 21
0411342	20- 22
0411369-2	89- 2
0411369-2	89- 32
0411421-2	108- 18
0411447	16- 24
0411447	17- 12
0411489	105- 30
0411489	107- 25
0411489	108- 20
0411491	110- 24
0411491-1	110- 18
0411549	89- 16
0411550	89- 15
0411552	47- 6
0411555	49- 22
0411557	47- 9
0411559	47- 19
0411562	89- 28
0411563	89- 45
0411564	89- 37
0411564-3	89- 38
0411565	89- 27
0411573-1	89- 46
0411575-7	47- 11
0411576	43- 31
0411576	45- 27
0411579-5	43- 6
0411579-5	44- 7
0411579-5	45- 6
0411579-5	46- 7
0411582	25- 14
0411582	26- 5
0411590-1	45- 38
0411590-3	45- 41

PART NUMBER	FIGURE AND INDEX NO.
0411591	45- 42
0411592-1	45- 44
0411623-1	57- 15
0411629	57- 17
0411665	45- 40
0411670	16- 13
0411680	16- 4
0411680	16- 56
0411680	17- 54
0411680	18- 4
0411680	18- 6
0411680	18A- 7
0411680	18A- 11
0411680	18A- 12
0411718-2	16- 54
0411718-2	18- 5
0411730	53- 12
0411778-2	89- 4
0411778-2	89- 34
0411783	109- 37
0411840	52- 26
0411849	76- 68
0411849	77- 72
0411849-1	75- 65
0411851	43- 24
0411851	44- 30
0411857	44- 30
0411880	107- 3
0411881	107- 4
0411886	43- 32
0411886	45- 27
0411897-3	61- 25
0411973-1	47- 7
0412007-1	111- 9
0412146-1	34- 6
0412147	34- 9
0412148-1	34- 13
0412151-1	34- 10
0412151-1	34- 14
0412151-2	34- 15
0412151-3	34- 16
0412151-4	34- 11
0412151-5	34- 7
0412467	33- 19
0412470	34- 12
0412471-3	34- 17
0412480-3	58- 24
0412480-3	59- 22
0412480-3	60- 20
0412496	23- 9
0412496	24- 8
0412499-1	58- 40
0413016-3	103- 23
0413016-4	103- 19
0413042-4	103- 23
0413106-2	50- 6
0413126	58- 33
0413126-4	59- 32
0413126-4	60- 58
0413126-7	59- 31
0413126-7	60- 59
0413126-7	63- 81
0413126-7	63A- 83
0413131-3	58- 75
0413131-3	59- 72
0413131-3	60- 73
0413131-3	63- 6
0413131-3	63A- 6
0413138	114- 18
0413140	114- 15
0413140-2	114- 17
0413141-1	114- 22
0413142-4	114- 14
0413142-5	114- 14
0413148	43- 53

PART NUMBER	FIGURE AND INDEX NO.
0413148	45- 59
0413151	29- 10
0413151	30- 10
0413151	85- 21
0413157	3- 7
0413157	3A- 22
0413163-10	84- 9
0413163-11	84- 8
0413163-16	84- 5
0413163-17	84- 5
0413163-18	84- 7
0413163-23	84- 3
0413163-24	84- 3
0413163-25	84- 3
0413163-26	84- 3
0413163-5	84- 7A
0413163-7	84- 6
0413163-8	84- 5
0413163-9	84- 5
0413181-2	16- 41
0413181-2	17- 20
0413186-3	87- 19
0413186-3	88- 19
0413195-3	43- 36
0413195-3	45- 31
0413195-4	44- 26
0413195-4	46- 26
0413195-5	48A- 11
0413203	84- 10
0413205-10	111- 15
0413205-11	111- 6
0413213-1	103- 22
0413213-7	103- 22
0413216	103- 24
0413216	103- 24
0413216-4	103- 24
0413228	84- 13
0413233	84- 1
0413235	53- 19
0413235	122- 57
0413235	123- 56
0413238	114- 29
0413247	6A- 32
0413247	61- 2
0413247	62- 3
0413247	63- 55
0413247	63A- 55
0413279	34- 5
0413317-1	43- 39
0413317-1	44- 48
0413317-1	45- 34
0413317-1	46- 44
0413317-1	46A- 28
0413323-1	43- 23
0413323-2	44- 29
0413323-5	44- 29
0413323-7	49- 8
0413347-1	84- 13
0413362-3	43- 50
0413362-3	45- 56
0413366	43- 51
0413366	45- 57
0413366-1	43- 52
0413366-1	45- 58
0422006-2	6- 13
0422229-3	4- 18
0422280	7- 7
0422291	3- 4
0422291	3A- 19
0422292	3- 12
0422292	3- 14
0422292	3A- 28
0422292	3A- 30
0422344	21- 44
0422344	22- 42

PART NUMBER	FIGURE AND INDEX NO.
0422344	36- 34
0422344	122- 53
0422344	123- 52
0423006-12	1- 39
0423006-13	1- 39
0423006-21	1A- 31
0423006-22	1A- 31
0423006-25	1A- 33
0423007-1	1A- 37
0423542-6	1- 30
0423542-6	1A- 23
0425134	96- 28
0425134	96A- 26
0425134	97- 25
0432134-4	126- 68
0432138-2	110- 14
0432138-3	110- 27
0432138-4	126- 67
0432138-5	126- 66
0433006-11	37-16A
0433006-12	37- 16
0433006-2	37- 15
0433006-7	37- 11
0441016-1	129-
0441016-12	38- 50
0441016-12	129- 45
0441016-13	38- 50
0441016-13	129- 46
0441016-13	132- 1
0441016-24	38- 50
0441016-24	129- 45
0441016-24	132- 1
0441021	87- 22
0441021	88- 22
0441115-2	38- 4
0441115-3	122- 68
0441115-3	123- 65
0441115-4	38- 4
0441119	38- 12
0441119	38- 46
0441119	39- 17
0441130	38- 58
0441130-1	39- 35
0441139-5	38- 37
0441139-5	39- 50
0441139-6	38- 37
0441139-6	39- 50
0441141	39- 49
0441141-1	39- 49
0441141-3	39- 49
0441141-4	39- 49
0441143-11	38- 51
0441143-22	39- 43
0441143-23	39- 43
0441143-26	39- 43
0441143-27	39- 43
0441143-50	38- 50
0441143-51	38- 50
0441143-8	38- 55
0441143-9	38- 55
0441150-2	132- 3
0441150-3	132- 3
0441150-8	38- 42
0441150-8	132- 2
0441150-9	38- 42
0441150-9	132- 2
0441151	132- 4
0442006-11	133- 46
0442012-2	130-
0450017-10	63- 13
0450017-11	61- 13
0450017-11	62- 16
0450017-9	61- 13
0450111	30- 11
0450191-1	73- 26

PART NUMBER	FIGURE AND INDEX NO.
0450191-1	74- 25
0450234-27	67- 48
0450261	73- 43
0450261	74- 45
0450277-1	78- 42
0450277-2	78- 43
0450277-2	79- 39
0450277-2	80- 50
0450277-3	79- 40
0450277-3	80- 49
0450286	29- 14
0450286	85- 14
0450286-1	29- 9
0450311	81- 21
0450311	101- 13
0450311-3	90- 3
0450311-4	73- 41
0450311-4	74- 42
0450311-5	73- 16
0450311-5	74- 16
0450311-5	81- 32
0450311-5	81- 41
0450311-5	81A- 34
0450311-5	84- 34
0450311-5	85- 10
0450311-5	85- 49
0450314	3A- 23
0450314	84- 1
0500027-3	128- 8
0500027-4	127- 6
0500027-4	127- 23
0500027-4	127- 28
0500027-4	127- 29
0500027-4	128- 11
0500027-4	128- 28
0500027-4	128- 31
0500027-7	128- 9
0500027-7	128- 30
0500027-8	127- 3
0500027-9	127- 4
0500027-9	127- 25
0500027-9	127- 31
0500085-1	127- 34
0500085-1	127- 34
0500085-1	128- 35
0500085-2	127- 35
0500085-2	127- 35
0500085-2	128- 36
0500091-5	128- 34
0500091-6	127- 36
0500100-170	76- 52
0500100-5	75- 48
0500103-60	52- 9
0500106-100	75- 12
0500106-100	76- 12
0500106-101	93- 17
0500106-101	94- 16
0500106-101	95- 16
0500106-102	75- 11
0500106-103	75- 45
0500106-103	96- 43
0500106-103	97- 41
0500106-104	75- 46
0500106-104	96- 42
0500106-104	97- 40
0500106-105	73- 11
0500106-105	96-38A
0500106-106	99- 3
0500106-107	61- 20
0500106-107	73- 54
0500106-108	92- 11
0500106-109	96- 11
0500106-110	96- 19
0500106-111	96- 18
0500106-114	96- 36

PART NUMBER	FIGURE AND INDEX NO.
0500106-117	38- 63
0500106-118	38- 63
0500106-119	2- 55
0500106-119	92- 35
0500106-12	87- 13
0500106-121	96- 38
0500106-121	96- 39
0500106-121	96A- 36
0500106-122	96A- 37
0500106-13	87- 14
0500106-133	96- 41
0500106-133	96A- 40
0500106-133	97- 39
0500106-138	75- 16
0500106-14	87- 7
0500106-144	99- 18
0500106-152	86- 47
0500106-153	96- 13
0500106-154	96- 12
0500106-157	75- 16
0500106-158	75- 11
0500106-159	6- 44
0500106-160	75- 11
0500106-163	75- 16
0500106-163	76- 16
0500106-164	75- 11
0500106-164	76- 11
0500106-164	77- 11
0500106-165	38- 11
0500106-166	38- 11
0500106-167	38- 63
0500106-168	38- 63
0500106-169	38- 45
0500106-170	75- 48
0500106-170	77- 56
0500106-171	75- 45
0500106-172	75- 46
0500106-173	102- 7
0500106-176	87- 6
0500106-176	122- 66
0500106-176	123- 64
0500106-178	97- 10
0500106-179	97- 11
0500106-180	88- 12
0500106-181	88- 13
0500106-182	88- 6
0500106-183	88- 7
0500106-184	124- 7
0500106-185	124- 13
0500106-186	124- 19
0500106-187	39- 15
0500106-188	39- 15
0500106-191	97- 15
0500106-192	97- 16
0500106-194	88- 17
0500106-196	76- 43
0500106-196	77- 51
0500106-196	96- 42
0500106-196	96A- 42
0500106-197	76- 44
0500106-197	77- 52
0500106-197	96- 43
0500106-197	96A- 43
0500106-199	61- 20
0500106-199	74- 46
0500106-202	74- 11
0500106-202	96A- 38
0500106-202	97- 42
0500106-205	96A- 34
0500106-205	97- 32
0500106-209	96- 11
0500106-209	96A- 1
0500106-209	97- 8
0500106-213	92- 26
0500106-214	92- 5

PART NUMBER	FIGURE AND INDEX NO.
0500106-215	92- 19
0500106-216	92- 12
0500106-217	92- 30
0500106-220	99- 19
0500106-221	94- 33
0500106-221	95- 33
0500106-223	73- 54
0500106-223	74- 46
0500106-224	73- 54
0500106-224	74- 46
0500106-250	77- 12
0500106-251	93- 17
0500106-251	94- 16
0500106-251	95- 16
0500106-251	120D- 19
0500106-252	92- 31
0500106-253	92- 27
0500106-256	63-14B
0500106-257	92- 6
0500106-258	92- 13
0500106-273	63-14B
0500106-273	63A- 19
0500106-277	92- 20
0500106-278	88- 13
0500106-283	39- 15
0500106-284	39- 15
0500106-285	88- 12
0500106-290	92- 6
0500106-291	92- 13
0500106-292	99- 2
0500106-299	124- 19
0500106-311	39- 15
0500106-312	39- 15
0500106-320	96A- 16
0500106-321	96A- 11
0500106-322	96A- 2
0500106-324	96A- 17
0500106-325	96A- 12
0500106-326	96A- 3
0500106-346	96A- 4
0500106-35	87- 6
0500106-358	96A- 10
0500106-359	96A- 9
0500106-76	86- 42
0500106-77	86- 37
0500106-78	86- 31
0500106-86	38- 11
0500106-87	38- 11
0500106-88	38- 45
0500106-90	92- 4
0500106-92	61- 14
0500106-92	62- 17
0500106-92	99- 2
0500106-93	92- 18
0500106-94	92- 29
0500106-95	92- 25
0500106-96	96- 38
0500106-96	97- 36
0500106-97	96- 39
0500106-97	97- 37
0500106-98	93- 37
0500106-99	96- 35
0500106-99	96A- 33
0500106-99	97- 33
0500130-1	111B- 14
0510010-11	125- 7
0510010-12	125- 11
0510010-15	125- 19
0510010-16	125- 8
0510010-18	125- 1
0510010-19	125- 27
0510010-2	125- 13
0510010-21	125- 28
0510010-3	125- 5
0510010-30	125- 16

PART NUMBER	FIGURE AND INDEX NO.
0510010-31	125- 6
0510010-32	125- 4
0510010-4	125- 12
0510010-5	125- 20
0510010-6	125- 21
0510010-7	125- 22
0510105-113	107- 2
0510105-116	107- 1
0510105-121	109- 12
0510105-122	109- 16
0510105-123	42- 6
0510105-124	108- 8
0510105-125	108- 9
0510105-126	104- 26
0510105-126	106- 20
0510105-128	110- 19
0510105-129	110- 20
0510105-13	107- 2
0510105-130	121- 38
0510105-151	105- 39
0510105-152	105- 39
0510105-153	42- 6
0510105-153	105- 37
0510105-159	109- 1
0510105-16 - 14.08	107- 1
0510105-160	109- 2
0510105-161	109- 10
0510105-162	109- 11
0510105-163	109- 6
0510105-164	109- 7
0510105-166	106- 20
0510105-170	88- 43
0510105-171	105- 39
0510105-177	106- 20
0510105-178	106- 20
0510105-179	108- 39
0510105-182	108- 39
0510105-21	109- 12
0510105-22	109- 16
0510105-24 - 15.34	108- 8
0510105-25 - 15.48	108- 9
0510105-26 - 14.64	104- 1
0510105-26	106- 1
0510105-28	110- 19
0510105-28	126- 62
0510105-29	110- 20
0510105-31	126- 65
0510105-32	126- 64
0510105-33	126- 63
0510105-51 - 16.35	105- 1
0510105-52	105- 11
0510105-59	109- 1
0510105-60	109- 2
0510105-61	109- 10
0510105-62	109- 11
0510105-63 - 10.39	109- 6
0510105-64	109- 7
0510105-66	106- 2
0510105-67	126- 63
0510105-68	126- 63
0510105-70	87- 38
0510105-70	88- 43
0510105-71 - 15.73	105- 2
0510105-73	106- 21
0510105-77	106- 1
0510105-78	106- 2
0510105-79	108- 39
0510105-82	108- 39
0510110	23- 63
0510110	24- 33
0510111-10	108- 35
0510111-9	108- 35
0510112	23- 46
0510112	24- 43
0510112-1	23- 47

PART NUMBER	FIGURE AND INDEX NO.
0510112-1	24- 44
0510113-11	28- 1
0510113-12	28- 2
0510113-9	28- 2
0510114-50	14- 13
0510114-51	14- 14
0510128	19- 21
0510128	19- 22
0510128	20- 21
0510128	20- 22
0510128	28- 5
0510129-3	14- 15
0510129-3	15- 16
0510135	19- 23
0510135	20- 23
0510135	28- 3
0510135-3	28- 3
0510136	107- 19
0510137	107- 20
0510139	19- 24
0510139	20- 24
0510141	28- 13
0510144	28- 16
0510146	35- 16
0510146	36- 9
0510146-3	35- 20
0510146-3	36- 13
0510159	108- 1
0510161	108- 4
0510163 1.76	23- 40
0510163	24- 58
0510164	33- 20
0510166-5	109- 53
0510167	109- 59
0510169	109- 60
0510169-3	109- 60
0510171-1	109- 68
0510172-3	109- 63
0510172-4	109- 64
0510173	109- 65
0510174	16- 35
0510174	17- 69
0510176	109- 62
0510177	109- 61
0510178	109- 55
0510181	109- 70
0510181-1	109- 71
0510182	109- 61
0510183	15- 14
0510183-1	15- 15
0510184	109- 72
0510190	125- 25
0510191	109- 58
0510191	127- 20
0510191	128- 25
0510193-1	109- 61
0511000-11	16- 31
0511000-14 11.62	14- 10
0511000-15 [illegible]	14- 11
0511000-22	16- 18
0511000-22	17- 7
0511000-23	16- 18
0511000-23	17- 7
0511000-25	16- 6
0511000-25	27- 14
0511000-35	16- 32
0511000-35	17- 58
0511000-36	16- 22
0511000-37	16- 22
0511000-38	16- 33
0511000-41 - 25.68	14- 9
0511000-43	16- 14
0511000-43	17- 3
0511000-44	16- 15
0511000-44	17- 4

PART NUMBER	FIGURE AND INDEX NO.
0511000-6	16- 17
0511000-6	17- 6
0511000-60	16- 36
0511000-60	17- 62
0511000-63	16- 6
0511000-63	17- 2
0511000-63	27- 14
0511000-64 17.00	14-11A
0511000-7	16- 17
0511000-7	17- 6
0511000-8	16- 19
0511000-8	17- 8
0511000-9	16- 19
0511000-9	17- 8
0511001-129	53- 23
0511001-131	50- 5
0511001-133	53- 20
0511001-147	50- 18
0511001-148	50- 17
0511001-149	50- 19
0511001-186	50- 12
0511001-20	50- 15
0511001-22	50- 14
0511003-10	66- 9
0511003-12	66- 13
0511003-16	66- 12
0511003-17	66- 6
0511003-23	66- 3
0511003-29	66- 14
0511003-30	66- 14
0511003-31	66- 13
0511007-3	112- 5
0511007-4	112- 6
0511007-5	112- 4
0511007-6	112- 7
0511007-7	112- 9
0511007-8	112- 10
0511018	53- 41
0511035-4	63A- 14
0511049	57- 16
0511049-1	57- 16
0511062-10 46.52	59- 64
0511062-10	60- 53
0511062-10	64- 39
0511062-2	58- 15
0511062-3	58- 17
0511062-4	1- 16
0511062-4	1A- 13
0511062-5	1- 16
0511062-5 76.01	1A- 13
0511063	58- 5
0511063	59- 6
0511063	60- 7
0511063	60- 67
0511063	63- 9
0511063	63- 40
0511063	63A- 40
0511063	99- 6
0511063-2	99- 6
0511068	61- 31
0511068-2 116.06	61- 31
0511068-2	62- 35
0511068-2	63- 15
0511068-6	63- 15
0511068-6	63A- 20
0511071-1	39- 1
0511071-2	39- 1
0511071-3	39- 1
0511071-4	39- 1
0511072	39- 14
0511100-2	15- 6
0511100-3	15- 7
0511106-109	45- 47
0511106-137	43- 33
0511106-137	45- 28

PART NUMBER	FIGURE AND INDEX NO.
0511106-37	46A- 22
0511106-38	43- 26
0511106-38	45- 24
0511108-18	16- 27
0511108-19	16- 27
0511108-22	57- 14
0511112-13	47- 1
0511112-14	47- 5
0511112-15	47- 3
0511112-16	43- 28
0511112-16	45- 26
0511112-16	47-
0511112-4	47- 4
0511114-12	16- 3
0511114-12	17- 53
0511114-8	16- 3
0511116	16- 20
0511116	17- 9
0511116-1	16- 21
0511116-1	17- 9
0511119	47- 12
0511127	96- 26
0511127	96A- 24
0511127	97- 23
0511130	53- 24
0511131	66- 2
0511131-10	66- 11
0511131-15	66- 2
0511132	33- 22
0511133	18- 2
0511133	18A- 17
0511137-10	53- 16
0511137-16	53- 16
0511137-17	53- 15
0511137-7	53- 15
0511142-2	14- 12
0511142-2	15- 13
0511142-5	65- 22
0511145	16- 90
0511145	33- 23
0511146	14- 7
0511146	16- 91
0511146	17- 68
0511149-1	33- 6
0511150	16- 19
0511150-1	16- 19
0511151	16- 19
0511151	17- 8
0511151-1	16- 19
0511151-1	17- 8
0511151-6	16- 19
0511151-6	17- 8
0511151-7	16- 19
0511151-7	17- 8
0511152	53- 13
0511153	16- 86
0511153	17- 48
0511153-5	16- 86
0511153-5	17- 48
0511157-11	96- 24
0511157-11	97- 21
0511157-14	96- 22
0511157-15	97- 19
0511157-17	96- 24
0511157-17	96A- 22
0511157-17	97- 21
0511157-18	96- 23
0511157-18	96A- 21
0511157-18	97- 20
0511157-20	96- 20
0511157-20	96A- 18
0511157-20	97- 17
0511157-6	97- 20
0511162-3	24- 10
0511162-4	23- 2

PART NUMBER	FIGURE AND INDEX NO.
0511162-4	24- 1
0511165	65- 6
0511166	65- 5
0511168	52- 21
0511168	127- 15
0511168	128- 20
0511170	66- 4
0511172	54- 16
0511173	54- 14
0511174	57- 6
0511174-1	57- 7
0511176	16- 74
0511176	17- 37
0511177	53- 35
0511177-1	53- 36
0511177-2	53- 36
0511177-4	53- 35
0511177-5	53- 35
0511177-6	53- 36
0511177-7	53- 36
0511177-8	53- 35
0511184	54- 19
0511185	26- 8
0511186	50- 22
0511189	43- 41
0511189	45- 36
0511189-1	43- 42
0511189-1	44- 51
0511189-1	45- 37
0511189-1	46- 47
0511189-1	46A- 31
0511189-2	43- 40
0511189-2	44- 49
0511189-2	45- 35
0511189-2	46- 45
0511189-2	46A- 29
0511194-4	96- 25
0511194-4	96A- 23
0511194-4	97- 22
0511195	96- 33
0511195	96A- 31
0511195	97- 30
0511196-1	96- 34
0511196-1	96A- 32
0511196-1	97- 31
0511198	96- 32
0511198	96A- 30
0511198	97- 29
0511199-20	100- 2
0511199-22	100- 4
0511199-41	100- 2
0511199-41	101- 19
0511227	43- 35
0511229-1	53- 23
0511229-2	53- 23
0511231-14	86- 17
0511231-15	86- 14
0511231-17	86- 1
0511231-20	86- 9
0511231-22	86- 28
0511231-39	86- 25
0511231-4	86- 3
0511231-4	141- 56
0511231-5	86- 3
0511231-5	141- 57
0511231-6	86- 26
0511231-7	86- 27
0511231-8	86- 7
0511232-3	65- 2
0511232-4	16- 66
0511232-4	17- 29
0511233	65- 1
0511233-7	65- 1
0511241-1	44- 46
0511241-1	46- 48

PART NUMBER	FIGURE AND INDEX NO.
0511281	32- 18
0511284-3	57- 19
0511284-4	57- 19
0511285-3	16- 28
0511285-4	16- 28
0511285-4	17- 15
0511286	57A- 21
0511287	32- 5
0511288-1	32- 20
0511288-2	32- 21
0511289-1	32- 15
0511289-2	32- 6
0511289-3	32- 19
0511289-4	17- 19
0511289-4	32-
0511290-3	16- 23
0511290-3	17- 11
0511291-1	17- 10
0511291-2	17- 10
0511292-1	17- 67
0511292-2	17- 66
0511292-3	17- 63
0511293-1	15- 10
0511293-2	15- 9
0511293-3	15- 12
0511293-4	15- 11
0511295-1	17- 56
0511296-1	16- 89
0511296-1	17- 50
0511296-2	16- 89
0511296-2	17- 50
0511297	53- 12
0511298-1	47- 8
0511298-2	47- 10
0511301-120	54- 20
0511301-166	54- 17
0511301-18	54- 30
0511301-18	55- 24
0511301-19	54- 26
0511301-19	55- 20
0511301-20	54- 4
0511303-1	44- 50
0511303-1	46- 46
0511309-1	111- 2
0511311-11	123- 56
0511311-12	123- 56
0511311-3	53- 17
0511311-4	53- 18
0511312-1	14- 27
0511312-1	15- 24
0511463-1	43- 25
0511463-1	44- 18
0511463-1	45- 23
0511463-1	46- 18
0511475-1	52- 10
0511475-2	52- 11
0512000-18	16- 65
0512000-18	17- 28
0512000-19	33- 28
0512000-20	16- 45
0512000-20	17- 22
0512000-38	16- 49
0512000-38	18- 7
0512000-39	16- 50
0512000-39	18- 7
0512000-66	16- 55
0512000-66	18- 3
0512000-66	18A- 11
0512000-66	18A- 12
0512001-15	17- 24
0512001-16	17- 24
0512006	97- 2
0512006	96-10A
0512006	6A- 16
0512006-1	6A- 16

PART NUMBER	FIGURE AND INDEX NO.
0512107-12	126- 74
0512107-25	14- 16
0512107-30	126- 73
0512107-36	14- 16
0512107-36 – 113.75	15- 8
0512113-7	16- 73
0512113-7	17- 36
0512120	52- 8
0512120	128- 17
0512120-1	52- 8
0512120-1	127- 12
0512120-1	128- 17
0512121-6	33- 7
0512122	25- 3
0512122	26- 14
0512123	1- 6
0512123	1A- 6
0512124-12	25- 10
0512124-13	25- 20
0512124-15	25- 35
0512124-15	32- 14
0512124-20	25- 12
0512124-22	25- 11
0512124-23	17- 18
0512124-23	26- 2
0512124-24	26- 4
0512124-25	26- 3
0512124-26	26- 4
0512124-27	26- 3
0512124-28	17- 18
0512124-28	26- 2
0512124-29	25- 12
0512124-30	25- 11
0512124-32	25- 37
0512124-32	26- 24
0512124-34	17- 18
0512124-34	26- 2
0512124-37	26- 3
0512124-38	26- 4
0512124-39	25- 12
0512124-40	25- 11
0512124-5	25- 22
0512124-50	16- 38
0512124-51	25- 1
0512124-6	25- 2
0512124-6	26- 12
0512124-7	25- 23
0512124-8	25- 9
0512124-8	26- 18
0512124-9	25- 10
0512124-9	26- 19
0512128	25- 24
0512128	32- 9
0512129	25- 25
0512129	32- 10
0512132	25- 28
0512132-1	25- 29
0512132-1	32- 8
0512132-4	25- 29
0512132-5	25- 29
0512132-6	32- 7
0512133	25- 21
0512134	25- 18
0512134	26- 22
0512134-1	25- 19
0512134-1	26- 23
0512134-4	25- 28
0512135	109- 52
0512136	107- 47
0512137	25- 8
0512137	26- 20
0512138	107- 44
0512139	25- 17
0512139	26- 10
0512139-1	25- 17

PART NUMBER	FIGURE AND INDEX NO.
0512139-1	26- 11
0512139-2	25- 17
0512139-2	26- 10
0512139-3	25- 17
0512139-3	26- 11
0512140	109- 49
0512145	16- 51
0512145-1	16- 52
0512146	14- 18
0512146	15- 17
0512146-1	14- 18
0512146-1	15- 17
0512148	33- 8
0512149-1	14- 19
0512149-1	15- 18
0512149-2	14- 19
0512149-2	15- 18
0512150	25- 13
0512150	26- 9
0512151	16- 53
0512152	25- 32
0512152	32- 13
0512153-1	14- 21
0512153-2	14- 22
0512153-7	14- 21
0512153-7	15- 20
0512153-8	14- 22
0512153-8	15- 21
0512160	33- 13
0512166-3	52- 2
0512166-3	128- 18
0513000-10	21- 23
0513000-10	22- 24
0513000-9	21- 23
0513000-9	22- 24
0513003-19	122- 55
0513003-6	123- 54
0513006-101	23- 19
0513006-102 39.84	23- 30
0513006-103	23- 70
0513006-103	24- 37
0513006-104	23- 57
0513006-105	23- 69
0513006-11 18.36	23- 35
0513006-112	24- 17
0513006-112	27- 13
0513006-113	24- 27
0513006-113	27- 13
0513006-151	23- 41
0513006-16	27- 13
0513006-17	27- 13
0513006-21	23- 24
0513006-22	23- 29
0513006-22	24- 26
0513006-23	23- 59
0513006-24	23- 71
0513006-24	24- 42
0513006-25	23- 21
0513006-25	24- 18
0513006-26	23- 32
0513006-26	24- 28
0513006-3	23- 13
0513006-34	23- 15
0513006-35	23- 26
0513006-38	23- 16
0513006-39	23- 27
0513006-40	23- 14
0513006-41	23- 25
0513006-42	23- 20
0513006-42	24- 15
0513006-43	23- 31
0513006-43	24- 25
0513006-44	23- 12
0513006-44	24- 12
0513006-45	23- 23

PART NUMBER	FIGURE AND INDEX NO.
0513006-45	24- 22
0513006-46	23- 14
0513006-46	24- 13
0513006-47	23- 25
0513006-47	24- 23
0513006-61	23- 67
0513006-61	23- 76
0513006-62	23- 68
0513006-62	23- 77
0513006-8	23- 18
0513006-8	24- 16
0513006-9 12.60	23- 58
0513006-9	24- 32
0513007-10	24- 36
0513007-11	21- 2
0513007-11	24-
0513007-12	24- 30
0513007-13	24- 20
0513007-14	24- 30
0513007-15	24- 11
0513007-16	24- 21
0513007-17	24- 57
0513007-18	24- 21
0513007-19	24- 11
0513007-20	22- 1
0513007-20	24-
0513007-24	22- 1
0513007-24	24-
0513007-7	24- 56
0513007-9	24- 31
0513013	52- 8
0513013-11	52- 8
0513013-8	52- 8
0513022	127- 22
0513022	128- 27
0513038-3	21- 24
0513038-3	22- 25
0513038-4	21- 24
0513038-4	22- 25
0513039-7	58- 24
0513039-7	59- 22
0513039-7	60- 20
0513039-7	63- 32
0513039-7	63A- 32
0513049-4	21- 41
0513049-4	22- 40
0513051-1	60- 11
0513051-8	60- 11
0513051-8	63- 45
0513051-8	63A- 45
0513124-1	138- 2
0513144-1	63- 16
0513144-10	63- 18
0513144-10	63A- 23
0513144-11	63- 16
0513144-11	63A- 21
0513144-14	63A- 24
0513144-16	63A- 21
0513144-2	62- 27
0513144-2	63- 17
0513144-2	63A- 22
0513144-4	62- 32
0513144-9	62- 28
0513144-9	63- 18
0513144-9	99- 1
0513145-1	65- 22
0513146-11	63- 74
0513146-11	63A- 76
0513146-3	60- 63
0513146-9	60- 63
0513167-7	103- 19
0513167-7	103- 19
0513167-8	103- 19
0513167-8	103- 19
0513167-9	103- 19

PART NUMBER	FIGURE AND INDEX NO.
0513167-9	103- 19
0513168-1	103- 23
0513172-1	50- 26
0513172-2	50- 25
0513173-1	58- 28
0513173-1	59- 28
0513173-1	60- 22
0513194-1	120C- 84
0513208-1	114- 7
0513208-1	114- 43
0513521-7	64- 25
0520005-3	1- 20
0520005-3	1A- 17
0520007	1- 25
0520007-1	1- 25
0520008	1- 21
0520008	1A- 18
0520008-1	1- 21
0520008-1	1A- 18
0522629	7- 3
0522629	8- 3
0523003-40 2.72	5- 8
0523003-40	5- 18
0523003-40	5A- 15
0523005-50 42.46	4- 22
0523005-51 42.46	4- 22
0523106-4	3- 24
0523106-4	3A- 13
0523107	3- 8
0523107	3A- 24
0523107-2	3- 3
0523107-2	3A- 18
0523107-3	3- 3
0523107-3	3A- 18
0523108	3- 10
0523108	3- 10
0523108	3- 10
0523108	3- 10
0523108	3A- 26
0523108	3A- 26
0523108-3	3- 11
0523108-3	3A- 27
0523110-2 4.00	3- 20
0523110-5 4.00	3- 19
0523111-2	3- 10
0523111-2	3- 13
0523111-2	3A- 29
0523118-1	1- 29
0523118-1	1A- 22
0523119	1- 46
0523119	111- 2
0523215	4- 28
0523215-1	4- 28
0523216	4- 27
0523218	7- 9
0523218	107- 60
0523219-2	2- 48
0523219-2	2A- 37
0523219-2	2B- 39
0523219-3	2- 48
0523219-3	2A- 37
0523219-3	2B- 39
0523219-4	2- 48
0523219-4	2A- 37
0523219-4	2B- 39
0523219-5	2- 48
0523219-5	2A- 37
0523219-5	2B- 39
0523221	7- 4
0523222	7- 5
0523223	7- 1
0523223	107- 59
0523223-1	7- 1
0523223-1	107- 59
0523230	2- 40

PART NUMBER	FIGURE AND INDEX NO.
0523230 7.44	2A- 29
0523230	2B- 34
0523230-1	2- 40
0523230-1	2A- 29
0523230-1	2B- 34
0523230-4	2- 40
0523230-4	2A- 29
0523230-4	2B- 34
0523230-5	2- 40
0523230-5	2A- 29
0523230-5	2B- 34
0523232	2- 35
0523232	2A- 24
0523232	2B- 29
0523233	2- 38
0523233	2A- 27
0523233-2	2- 37
0523233-2	2A- 26
0523233-3	2- 39
0523233-3	2A- 28
0523233-3	2B- 33
0523233-6	2B- 31
0523233-7	2B- 32
0523306	4- 11
0523307	9- 4
0523308	4- 5
0523309	4- 2
0523309-1	4- 2
0523315 13.75	4- 6
0523315-1	4- 6
0523316 6.66	4- 9
0523316-1	4- 9
0523321-1	4- 10
0523321-2	4- 10
0523321-3	4- 10
0523321-4	4- 10
0523400-20	4- 21
0523400-21	4- 21
0523400-52	4- 17
0523400-53 63.72	4- 17
0523400-54	4- 16
0523400-55	4- 16
0523406	4- 22
0523406-1 13.51	4- 22
0523407	2- 43
0523407	2A- 32
0523407-1	2- 44
0523407-1	2A- 33
0523408	2- 47
0523408	2A- 36
0523409	4- 20
0523409-1	4- 19
0523509 5.74	2- 25
0523509	2A- 15
0523509-1	2- 25
0523510	2- 27
0523510	2A- 16
0523510	2B- 19
0523510-1	2- 27
0523510-1	2A- 16
0523510-1	2B- 19
0523511-4	2- 41
0523511-4 1.63	2A- 30
0523511-4	2B- 35
0523511-6	2- 29
0523511-6	2A- 18
0523511-6	2B- 21
0523511-7 5.60	2- 28
0523511-7	2A- 17
0523511-8	2B- 20
0523512-3	2- 30
0523512-3 6.42	2A- 19
0523512-4 2.10	2- 42
0523512-4	2A- 31
0523512-4	2B- 36

PART NUMBER	FIGURE AND INDEX NO.
0523512-5 2.52	3- 22
0523512-7	2B- 22
0523513-3 5.79	2- 31
0523513-3	2A- 20
0523513-4 1.93	3- 23
0523513-6 5.79	2- 31
0523513-6	2A- 20
0523513-7	2B- 23
0523513-8	2B- 23
0523514-3 7.14	2- 32
0523514-3	2A- 21
0523514-4 2.07	3- 25
0523515-3 4.27	2- 33
0523515-3 4.09	2A- 22
0523515-4 1.88	3- 27
0523517-4	2- 26
0523535	8- 1
0523535	109- 75
0523535-1	8- 1
0523535-1	109- 75
0523536	8- 4
0523537	8- 7
0523537	109- 76
0523539-2	2- 45
0523539-3	2- 45
0523539-4	2- 46
0523539-5	2- 46
0523541-25 7.37	5- 5
0523541-26 9.42	5- 5
0523541-27 ~~12.24~~ 6.12	5- 6
0523541-27	5- 20
0523541-28 ~~12.24~~ 6.12	5- 6
0523541-28	5- 20
0523541-29 ~~12.78~~ 6.39	5- 7
0523541-29	5- 21
0523541-30 ~~12.78~~ 6.39	5- 7
0523541-30	5- 21
0523541-31 5.79	5- 19
0523541-32 5.79	5- 19
0523541-43	5- 5
0523541-44	5- 5
0523541-45	5- 7
0523541-45	5- 20
0523541-46	5- 6
0523541-46	5- 21
0523541-47	5- 6
0523541-47	5- 21
0523541-48	5- 7
0523541-48	5- 20
0523541-49	5- 19
0523541-50	5- 19
0523541-51	5A- 3
0523541-52	5A- 3
0523541-53	5A- 4
0523541-53	5A- 8
0523541-54	5A- 4
0523541-54	5A- 8
0523541-55	5A- 9
0523541-56	5A- 5
0523541-57	5A- 10
0523541-58	5A- 10
0523541-59	5A- 5
0523541-60	5A- 9
0523541-61	3A- 1
0523541-62	3A- 2
0523541-63	3A- 3
0523542-1291	3- 21
0523608-2	9- 8
0523614-1	9- 8A
0523615-1	9-10A
0523616-1	9-12A
0523700	2- 50
0523701-4	2- 56
0523701-4	2A- 44
0523701-4	2B- 45

PART NUMBER	FIGURE AND INDEX NO.
0523702-3	1A- 39
0523702-4	1A- 39
0523800-10	7- 25
0523800-11	7- 25
0523800-12 15.95	7- 26
0523800-13	7- 26
0523800-14	7- 13
0523800-15	7- 13
0523800-16	7- 13
0523800-17	7- 13
0523800-6	7- 23
0523800-7	7- 23
0523800-8	7- 24
0523800-9	7- 24
0523806	7- 14
0523806-1	7- 14
0523807	7- 31
0523808	7- 15
0523808-2	7- 15
0523809	7- 16
0523809-1	7- 16
0523810	7- 17
0523811	7- 18
0523811-1	7- 18
0523812-2	7- 19
0523812-3	7- 19
0523813-1	7- 27
0523813-2	4- 24
0523813-3	4- 23
0523813-4	4- 25
0523813-5	4- 26
0523813-6	7- 29
0523813-7	7- 30
0523813-8	7- 28
0523814-4	7- 21
0523814-5	7- 21
0523901	8- 13
0523901-1	8- 13
0523901-2	8- 29
0523901-3	8- 29
0523901-4	8- 30
0523901-5 18.04	8- 30
0523901-6	8- 31
0523901-7 11.55	8- 31
0523901-8	8- 24
0523901-9	8- 25
0523911	8- 21
0523911-1	8- 21
0523912	8- 28
0523912-1	8- 22
0523914-2	8- 26
0523918	8- 32
0523919	8- 17
0523920	8- 16
0523921	8- 15
0523922	8- 18
0523923	8- 23
0526001-1	65- 25
0526001-3	6- 27
0526001-3	6A- 26
0531003-6	113-
0541103-16	38- 24
0541103-50	129- 23
0541103-52	129- 22
0541105	38- 7
0541105	39- 2A
0541111-2	38- 37
0541111-2	39- 50
0541115-2	65- 9
0541115-3	65- 8
0541115-4	65- 11
0541116-2	132- 7
0541116-25	132- 35
0541116-26	132- 35
0541116-27	132- 36

PART NUMBER	FIGURE AND INDEX NO.
0541116-28	132- 36
0541116-3	132- 7
0541121-1	32- 1
0541121-2	32- 2
0541122-1	32- 3
0541122-2	32- 4
0541124-1	38- 17
0541124-1	39- 29
0541126	121- 20
0541126	121- 20
0541126	122- 22
0541126	123- 21
0541126-1	121- 20
0541126-1	122- 22
0541126-1	123- 21
0541127	121- 22
0541127-2	121- 55
0541128	121- 11
0541128	122- 13
0541128	123- 16
0541129	121- 4
0541129	122- 6
0541129	123- 7
0541130	121- 21
0541131	121- 16
0541131-1	121- 16
0541137-11	121- 48
0541137-11	122- 47
0541137-8	121- 48
0541138-16	89- 12
0541138-16	137-
0541138-17	89- 11
0541138-17	137-
0541138-18	89- 12
0541138-18	137-
0541138-5	137- 14
0541139	137- 8
0541140	137- 1
0541141-1	137- 7
0541141-2	137- 7
0541143	137- 17
0541144	137- 16
0541145	137- 3
0541146	137- 6
0541147-2	137- 11
0541148	137- 14
0541148-1	137- 20
0541149	137- 10
0541151	137- 9
0541153	39- 7
0541154-1	39- 25
0541156-1	39- 21
0541156-2	39- 21
0541157-1	39- 50
0541157-2	39- 50
0541160-13	129-
0541161-3	129- 22
0541162-1	65- 24
0541162-1	130- 16
0541162-1	130A- 12
0542100-1	131- 2
0542101-1	131- 4
0542102-1	131- 7
0542111	133- 26
0542111-10	133- 38
0542111-11	133- 37
0542111-12	133- 20
0542111-13	133- 41
0542111-14	133- 42
0542111-2	133- 34
0542111-3	133- 36
0542111-3	133- 40
0542111-4	133- 29
0542111-5	133- 28
0542111-6	133- 32

PART NUMBER	FIGURE AND INDEX NO.
0542111-7	133- 31
0542111-8	133- 27
0542111-9	133- 30
0542117-1	40- 43
0542117-1	40A- 43
0542117-5	40A- 43
0542118-1	131- 2
0542119-1	131-
0543000-6	41- 17
0543000-6	41A- 11
0543000-9	41- 65
0543000-9	41- 77
0543000-9	41A- 29
0543000-9	41A- 41
0543001	40- 3
0543001	40A- 3
0543002	40- 5
0543003	40- 2
0543003	40A- 2
0543004	40- 13
0543004	40A- 13
0543005-1	130-
0543005-15	130- 14
0543005-3	130- 15
0543008	41- 1
0543008-2	41- 2
0543008-2	41A- 1
0543011-5	41- 34
0543013-1	21- 31
0543013-1	22- 30
0543015-6	21- 28
0543016-1	21- 35
0543016-1	22- 34
0543018-1	40- 23
0543018-1	40A- 23
0543023	40- 32
0543023	40A- 32
0543026-1	21- 28
0543027-2	22- 26
0543027-3	22- 27
0543029	41- 31
0543029	41A- 23
0543032	41- 32
0543032	41A- 24
0543033-1	41- 42
0543035-1	41- 62
0543035-2	41- 75
0543035-2	41A- 39
0543035-3	41- 63
0543035-3	41A- 27
0543036-1	41- 19
0543036-1	41A- 12
0543037-1	40- 5
0543037-1	40A- 5
0543039-201	41A- 2
0543000-212	41- 2
0550100-6	99- 37
0550100-9	73- 20
0550100-9	74- 27
0550153-1	73- 9
0550153-1	74- 8
0550154-2	73- 8
0550154-2	74- 7
0550155	73- 7
0550155	74- 6
0550156	73- 5
0550156	74- 9
0550177-1	95- 53
0550177-1	120D- 28
0550209-1	76- 64
0550209-1	77- 68
0552102	81- 61
0552103	81A- 10
0552103	81A- 14
0594300-205	40- 21

PART NUMBER	FIGURE AND INDEX NO.
0594300-205	41-
0594300-206	41- 2A
0594300-207	40- 21
0594300-207	41-
0594300-209	41- 2
0594300-210	40- 21
0594300-210	41-
0594300-211	40- 21
0594300-211	40A- 21
0594300-211	41-
0594300-211	41A-
0700005-17	111- 14
0700005-18	111- 13
0700005-39	112- 17
0700005-40	112- 18
0700005-41	112- 19
0700005-42	112- 16
0700005-90	111A- 7
0700009-1	128- 2
0700009-2	128- 3
0700011	128- 5
0700012	128- 4
0700012	128- 6
0700013	128- 3
0700013-1	128- 3
0700015	127- 2
0700015	127- 5
0700015	128- 7
0700015	128- 10
0700020-1	127- 26
0700020-1	127- 32
0700020-2	127- 38
0700026-1	127- 7
0700026-1	128- 12
0700026-2	127- 8
0700026-2	128- 13
0700026-3	127- 9
0700026-3	128- 14
0700029-1	127- 24
0700029-1	128- 29
0700029-4	127- 30
0700030-1	124- 5
0700030-1	124A- 5
0700030-2	124- 6
0700030-2	124A- 6
0700030-3	124- 11
0700030-4	124- 10
0700030-5	124- 16
0700030-6	124- 25
0700030-7	124- 24
0700030-8	124- 3
0700030-8	124A- 3
0700030-9	124- 4
0700030-9	124A- 4
0700031-2	10- 40
0700031-2	113- 9
0700031-3	113- 18
0700036-2	63- 4
0700036-2	63A- 45
0700039-PC2	111A- 9
0700039-PC3	111B- 5
0700053-1	127- 37
0700053-1	128- 33
0700054-1	127- 39
0700054-2	127- 39
0700058-1	50- 4A
0700073-2	66A- 1
0700076-1	124A- 13
0700087-12	96A- 9
0700100-1	50- 1
0700100-10	51- 2
0700100-100	54- 10
0700100-101	54- 12
0700100-105	54- 7
0700100-11	53- 21

PART NUMBER	FIGURE AND INDEX NO.
0700100-114	57- 9
0700100-12	53- 22
0700100-129	57- 4
0700100-132	57- 12
0700100-135	50- 2
0700100-158	51- 7
0700100-191	50- 16
0700100-192	53- 4
0700100-192	53- 8
0700100-193	53- 5
0700100-195	53- 29
0700100-2	52- 6
0700100-205	50- 20
0700100-25	52- 22
0700100-26	52- 23
0700100-27	52- 9
0700100-28	50- 13
0700100-29	53- 33
0700100-3	52- 1
0700100-30	53- 34
0700100-33	52- 18
0700100-34	52- 24
0700100-39	51- 4
0700100-4	52- 5
0700100-40	51- 5
0700100-43	54- 1
0700100-44	57-
0700100-45	57- 9
0700100-5	53- 30
0700100-6	53- 31
0700100-7	53- 1
0700100-8	53- 2
0700100-82	50- 21
0700100-9	51- 1
0700100-98	54- 2
0700101-1	50- 3
0700101-10	51- 2
0700101-100	54- 10
0700101-101	54- 12
0700101-105	54- 7
0700101-129	57- 4
0700101-132	57- 12
0700101-143	52- 10
0700101-144	52- 11
0700101-144	52- 10
0700101-145	52- 12
0700101-146	52- 13
0700101-15	53- 29
0700101-16	54- 1
0700101-17	54- 2
0700101-18	54- 8
0700101-2	52- 6
0700101-20	50- 4
0700101-29	53- 33
0700101-30	53- 34
0700101-38	52- 1
0700101-39	51- 5
0700101-4	52- 5
0700101-40	51- 5
0700101-43	54- 1
0700101-44	57-
0700101-45	57- 9
0700101-5	53- 30
0700101-54	52- 4
0700101-6	53- 31
0700101-7	53- 1
0700101-8	53- 2
0700101-82	50- 21
0700101-9	51- 2
0700101-98	54- 2
0700102-10	51- 2
0700102-101	54- 12
0700102-105	54- 7
0700102-129	57- 4
0700102-132	57- 12

PART NUMBER	FIGURE AND INDEX NO.
0700102-16	54- 1
0700102-17	54- 2
0700102-18	54- 8
0700102-189	57- 9
0700102-39	51- 5
0700102-40	51- 5
0700102-43	54- 1
0700102-44	57-
0700102-45	57- 9
0700102-5	53- 30
0700102-6	53- 31
0700102-7	53- 1
0700102-8	53- 2
0700102-89	57- 19
0700102-9	51- 2
0700102-98	54- 2
0700103-1	53- 1
0700103-115	54- 13
0700103-120	51- 5
0700103-121	51- 5
0700103-122	53- 33
0700103-123	53- 34
0700103-124	54- 9
0700103-125	54- 9
0700103-127	52- 13
0700103-130	52- 13
0700103-2	53- 2
0700103-3	51- 2
0700103-4	51- 2
0700103-45	50- 3
0700103-49	50- 4
0700103-5	53- 30
0700103-55	52- 18
0700103-58	57- 5
0700103-59	57-
0700103-6	53- 31
0700103-62	57- 9
0700103-65	57- 13
0700103-77	54- 1
0700103-78	54- 1
0700103-84	54- 11
0700103-85	54- 2
0700103-86	54- 2
0700104-24	64- 35
0700104-25	64- 35
0700104-28	52- 34
0700104-29	52- 35
0700104-30	52- 36
0700104-89	56A- 12
0700105-1	53- 6
0700105-10	57- 13
0700105-11	57- 5
0700105-12	55- 3
0700105-125	53- 10
0700105-126	53- 11
0700105-17	55- 6
0700105-18	50- 13
0700105-19	50- 12
0700105-2	53- 7
0700105-20	55- 5
0700105-20	56- 4
0700105-20	56A- 7
0700105-201	52- 9
0700105-202	52- 6
0700105-203	52- 8
0700105-204	52- 5
0700105-208	56-
0700105-209	56- 6
0700105-21	55- 7
0700105-21	56A- 11
0700105-210	56- 7
0700105-215	53- 29
0700105-216	52- 18
0700105-218	50- 13
0700105-22	53- 34

PART NUMBER	FIGURE AND INDEX NO.
0700105-226	50- 4
0700105-23	53- 33
0700105-238	52- 1
0700105-24	51- 5
0700105-243	52- 8
0700105-245	53- 39
0700105-246	53- 40
0700105-247	50- 3
0700105-249	53- 30
0700105-25	51- 5
0700105-250	53- 31
0700105-251	57- 9
0700105-252	57-
0700105-253	53- 6
0700105-254	53- 7
0700105-255	53- 33
0700105-258	53- 34
0700105-259	55- 6
0700105-26	50- 4
0700105-260	55- 3
0700105-260	56- 2
0700105-261	52- 13
0700105-262	52- 13
0700105-265	52- 4
0700105-266	52- 25
0700105-269	55- 1
0700105-271	51- 5
0700105-272	51- 5
0700105-273	51- 2
0700105-274	51- 2
0700105-28	53- 9
0700105-282	50- 21
0700105-284	56- 5
0700105-285	53- 25
0700105-286	53- 26
0700105-29	53- 10
0700105-3	51- 2
0700105-30	53- 11
0700105-301	50- 20
0700105-302	50- 19
0700105-303	50- 18
0700105-305	50- 17
0700105-309	56-
0700105-317	50- 13
0700105-318	50- 13
0700105-321	50- 20
0700105-322	50- 19
0700105-323	50- 18
0700105-33	53- 27
0700105-34	53- 28
0700105-349	53- 30
0700105-350	53- 31
0700105-351	57- 9
0700105-359	55- 6
0700105-361	55- 3
0700105-361	56- 2
0700105-37	53- 37
0700105-370	55- 1
0700105-38	53- 38
0700105-384	56- 5
0700105-385	56A-
0700105-39	53- 30
0700105-390	56A-
0700105-397	56A- 8
0700105-397	56B- 10
0700105-398	56A- 2
0700105-399	56A- 2
0700105-4	51- 2
0700105-40	53- 31
0700105-400	56A- 9
0700105-405	51- 2
0700105-406	51- 2
0700105-408	55- 1
0700105-410	57-
0700105-413	55- 3

PART NUMBER	FIGURE AND INDEX NO.
0700105-414	55- 6
0700105-415	55- 5
0700105-416	55- 7
0700105-418	52- 6A
0700105-419	52- 7B
0700105-423	16- 92
0700105-423	53- 27
0700105-424	16- 92
0700105-424	53- 28
0700105-425	56A- 8
0700105-425	56B- 10
0700105-433	52- 18
0700105-435	53- 6
0700105-436	53- 7
0700105-437	51- 2
0700105-438	51- 2
0700105-439	53- 30
0700105-440	53- 31
0700105-447	52- 13
0700105-448	52- 13
0700105-45	53- 39
0700105-455	53- 6
0700105-456	53- 7
0700105-46	53- 40
0700105-462	57- 9
0700105-465	57- 5
0700105-49	53- 30
0700105-5	53- 30
0700105-50	53- 31
0700105-51	57- 9
0700105-52	57-
0700105-53	53- 6
0700105-54	53- 7
0700105-55	53- 33
0700105-58	53- 34
0700105-59	55- 6
0700105-6	53- 31
0700105-60	55- 3
0700105-62	57- 9
0700105-69	55- 1
0700105-7	55- 1
0700105-71	51- 5
0700105-72	51- 5
0700105-73	51- 2
0700105-74	51- 2
0700105-8	57-
0700105-82	57- 20
0700106-1	55- 18
0700106-1	56- 28
0700108-1	17- 30
0700108-2	17- 30
0700109-1	50- 23
0700109-6	50- 23
0700110-3	53- 43
0700110-4	53- 44
0700111-1	18A- 15
0700111-2	18A- 15
0700112-1	18A- 14
0700112-2	18A- 14
0700113-1	56A- 37
0700114-25-273	52- 1
0700120-1	113- 18
0700309-1	76- 59
0700309-1	77- 63
0700309-2	76- 60
0700309-2	77- 64
0700309-3	76- 61
0700309-3	77- 65
0700310-1	93- 43
0700311	81- 20
0700313-11	81- 30
0700313-11	81A- 32
0700313-20	81- 7
0700313-20	81A- 3
0700313-24	81- 31

PART NUMBER	FIGURE AND INDEX NO.
0700313-24	81A- 33
0700313-25	81- 17
0700313-25	81A- 21
0700313-29	81- 8
0700313-29	81A- 4
0700313-3	81- 24
0700313-3	81A- 26
0700313-35	81- 1
0700313-36	81- 2
0700313-37	81- 5
0700313-38	81- 6
0700313-4	81- 18
0700313-4	81A- 22
0700313-40	81- 18
0700313-44	81- 38
0700313-44	81A- 40
0700313-45	81- 44
0700313-45	81A- 43
0700313-49	81- 15
0700313-49	81A- 19
0700313-5	81- 3
0700313-5	81A- 1
0700313-58	81A- 12
0700313-59	81A- 23
0700313-62	81A- 7
0700313-7	81- 4
0700313-7	81A- 2
0700313-9	81- 27
0700313-9	81A- 29
0700315-2	65- 23
0700317-10	84- 23
0700317-12	84- 24
0700318-2	77- 63
0700319-12	81- 56
0700319-12	81- 57
0700319-12	81A- 25
0700319-12	81A- 55
0700319-13	53-14A
0700319-13	81- 62
0700319-13	81A- 56
0700319-13	127- 33
0700319-13	128- 32
0700319-2	81- 52
0700319-3	81- 51
0700319-5	81A- 52
0700319-6	81A- 51
0700320-1	55- 36
0700320-1	56- 39
0700320-1	56A- 43
0700320-1	56B- 13
0700320-1	57- 27
0700322-4	84- 14
0700325-1	84- 14
0700326-1	84- 25
0700327-1	84- 26
0700616-1	114- 39
0700616-2	114- 42
0700617-1	114- 48
0700618-1	114- 49
0710000-1	16- 2
0710000-1	17- 52
0710000-23	16- 1
0710000-25	16- 42
0710000-27	16- 64
0710000-27	17- 27
0710000-3	16- 64
0710000-38	122- 39
0710000-4	16- 67
0710000-47	16- 1
0710000-47	17- 51
0710001-1	126- 15
0710001-10	126- 16
0710001-11	126- 49
0710001-12	126- 48
0710001-13	126- 44

PART NUMBER	FIGURE AND INDEX NO.
0710001-14	126- 39
0710001-15	126- 45
0710001-16	126- 4
0710001-17	126- 6
0710001-19	126- 17
0710001-2	126- 20
0710001-20	126- 31
0710001-23	126- 1
0710001-25	126- 5
0710001-26	126- 34
0710001-26	126- 36
0710001-3	126- 7
0710001-30	126- 53
0710001-31	126- 54
0710001-32	126- 57
0710001-34	126- 51
0710001-36	126- 60
0710001-4	126- 30
0710001-42	126- 42
0710001-45	126- 46
0710001-46	126- 19
0710001-46	126- 28
0710001-46	126- 33
0710001-49	126- 69
0710001-5	126- 9
0710001-50	126- 70
0710001-51	126- 71
0710001-52	126- 72
0710001-54	126- 11
0710001-6	126- 10
0710001-62	126- 8
0710001-62	126- 21
0710001-7	126- 11
0710001-8	126- 12
0710002-6	16- 48
0710009-1	33-20A
0710011-1	33- 8A
0710011-1	57A- 14
0710020-14	16- 68
0710020-14	17- 31
0710020-15	14- 6
0710020-15	15- 5
0710020-8	14- 4
0710020-8	14- 5
0710020-8	15- 4
0710023-1	18A- 9
0710023-2	18A- 10
0710024-1	18A- 8
0710024-2	18A- 8
0710025-1	16- 69
0710025-1	17- 32
0710025-1	122- 39
0710025-1	123- 38
0710025-2	16- 47
0710025-3	17- 23
0710026-1	18A- 20
0710026-2	18A- 20
0710026-3	18A- 21
0710026-4	18A- 21
0710026-5	18A- 22
0710026-6	18A- 22
0710030-1	52- 8
0710032-3	52- 2
0710032-3	127- 13
0710032-3	128- 18
0710101-1	114- 2
0710101-3	114-
0710103-10	114-
0710103-11	114- 3
0710103-2	114- 11
0710103-3	114-
0710103-5	114- 3
0710104-1	16- 88
0710104-1	17- 49
0710105-1	18- 15

PART NUMBER	FIGURE AND INDEX NO.
0710105-2	18- 15
0710105-3	16- 59
0710105-3	18- 11
0710105-3	18A- 16
0710105-4	16- 59
0710105-4	18- 11
0710105-4	18A- 16
0710106-1	18- 14
0710106-2	18- 14
0710106-3	16- 58
0710106-3	18- 10
0710106-3	18A- 18
0710106-4	16- 57
0710106-4	18- 10
0710106-4	18A- 18
0710107-1	18- 13
0710107-2	18- 13
0710107-3	16- 58
0710107-3	18- 9
0710107-3	18A- 19
0710107-4	16- 58
0710107-4	18- 9
0710107-4	18A- 19
0710108-1	18- 12
0710108-2	18- 8
0710108-3	16- 60
0710108-3	18- 8
0710108-3	18A- 13
0710109-1	14- 21
0710109-1	15- 20
0710109-2	14- 22
0710109-2	15- 21
0710110-1	18A- 23
0710110-2	18A- 23
0710111-1	18A- 24
0710111-2	18A- 24
0710112-1	18A- 23
0710112-2	18A- 23
0710113-1	18A- 20
0710113-2	18A- 20
0710113-3	18A- 21
0710113-4	18A- 21
0710115-1	17- 39
0710302-1	56A- 23
0710302-1	56B- 66
0710304-2	55- 12
0710304-2	56A- 18
0710306-1	56A- 39
0710308-1	56A- 26
0710308-1	56B- 69
0710312-2	56A- 35
0710312-2	56B- 21
0710313-2	56A- 5
0710313-2	56B- 6
0710316-1	55- 8
0710316-1	56A- 13
0710317-1	56A- 24
0710317-1	56B- 68
0711001-21	43- 10
0711001-21	44- 44
0711001-21	45- 10
0711001-21	46- 42
0711001-25	43- 9
0711001-25	44- 8
0711001-26	45- 7
0711001-26	46- 8
0711001-26	46A- 10
0711001-29	43- 22
0711001-29	44- 17
0711001-29	45- 22
0711001-29	46- 17
0711001-29	46A- 21
0711001-35	43- 19
0711001-35	44- 14
0711001-36	45- 19

PART NUMBER	FIGURE AND INDEX NO.
0711001-36	46- 14
0711001-36	46A- 18
0711001-42	45- 9
0711001-42	46- 10
0711001-42	46A- 12
0711001-43	43- 8
0711001-43	44- 10
0711001-44	45- 8
0711001-44	46- 9
0711001-44	46A- 11
0711001-45	43- 7
0711001-45	44- 9
0711001-48	45- 5
0711001-48	46- 6
0711001-49	43- 5
0711001-49	44- 6
0711001-52	43- 20
0711001-52	44- 15
0711001-52	45- 20
0711001-52	46- 15
0711001-52	46A- 19
0711001-67	43- 1
0711001-68	45- 1
0711003	16- 29
0711003	17- 16
0711006-1	14- 29
0711006-2 24.60	14- 29
0711013-1	49- 29
0711015-1	48- 15
0711016-1	48- 5
0711016-1	48A- 28
0711017	48- 9
0711017-1	48- 9
0711017-1	48A- 16
0711018-15	48- 11
0711018-15	48A- 24
0711018-16	48- 11
0711018-16	48A- 24
0711018-19	48A- 6
0711018-20	48A- 7
0711018-23	48- 6
0711018-23	48A- 17
0711018-24	48- 6
0711018-24	48A- 17
0711018-25	48A- 8
0711018-27	48A- 4
0711018-27	48A- 29
0711018-7	48- 3
0711018-8	48- 3
0711019-1	48- 4
0711019-1	48- 4
0711019-1	48A- 15
0711020-1	44- 22
0711020-1	48-
0711020-11	44- 22
0711020-11	48-
0711020-12	46- 22
0711020-12	48-
0711020-2	46- 22
0711020-2	48-
0711020-7	44- 22
0711020-7	48-
0711021-4	44- 37
0711021-4	46- 35
0711021-9	44- 39
0711021-9	46- 37
0711022-16	46- 28
0711023-1	44- 1
0711023-14	44- 19
0711023-14	46- 19
0711023-15	44- 19
0711023-15	46- 20
0711023-2	46- 1
0711023-51	44- 1
0711023-52	46- 1

PART NUMBER	FIGURE AND INDEX NO.
0711023-55	44- 1
0711023-56	46- 1
0711023-57	44- 1
0711023-58	46- 1
0711023-59	44- 1
0711023-60	46- 1
0711023-61	44- 1
0711023-62	46- 1
0711023-69	44- 1
0711023-73	44- 1
0711024-1	26- 5
0711024-2	26- 7
0711024-4	25- 14
0711026-1	44- 46
0711026-1	46- 48
0711026-1	127- 27
0711027-1	44- 50
0711027-1	46- 46
0711027-1	46A- 30
0711028-1	44- 23
0711028-2	46- 23
0711029-1	44- 25
0711029-1	48A- 10
0711029-2	45- 30
0711029-2	46- 25
0711029-2	48A- 10
0711030-20	55- 8
0711031-1	55- 12
0711032-2	48- 15
0711032-2	48A- 21
0711034-1	44- 22
0711034-1	46- 22
0711034-1	46A- 25
0711037-1	44- 6
0711037-10	44- 7
0711037-11	46A- 8
0711037-2	46- 6
0711037-2	46A- 4
0711037-3	44- 7
0711037-4	46- 7
0711037-4	46A- 7
0711037-5	44- 6
0711037-6	46- 6
0711037-6	46A- 5
0711037-8	46- 7
0711038-1	44- 6
0711038-1	44- 7
0711038-1	46- 6
0711038-1	46- 7
0711038-1	46A- 6
0711038-1	46A- 9
0711039-1	44-13A
0711039-1	43-13A
0711039-2	46A- 16
0711039-2	45-13A
0711040-1	44- 11
0711040-2	46- 11
0711040-2	46A- 13
0711040-3	43-16A
0711040-4	45-16A
0711042-1	56- 35
0711048-1	56- 9
0711049-1	56- 34
0711050-11	43- 42
0711050-12	45- 48
0711050-13	43- 46
0711050-14	45- 52
0711050-19	44- 30
0711050-20	46- 28
0711050-200	44- 36
0711050-200	46- 34
0711050-3	44- 30
0711050-4	46- 28
0711050-5	44- 34
0711050-6	46- 32

PART NUMBER	FIGURE AND INDEX NO.
0711051-1	43- 44
0711051-1	44- 32
0711051-1	46- 30
0711051-2	44- 32
0711051-2	45- 50
0711051-2	46- 30
0711056-1	56- 18
0711058-1	56- 23
0711059-1	122- 70
0711060-1	48- 4A
0711060-1	48A- 14
0711061-1	44- 22
0711061-1	48A-
0711061-2	46- 22
0711061-2	46A- 24
0711061-2	48A-
0711062-1	48A- 2
0711062-2	48A- 2
0711063-1	48A- 9
0711063-2	48A- 9
0711079-1	57A- 13
0711080-1	57A- 8
0711083-1	57A- 17
0711097-2	57A- 1
0711097-21	57A- 12
0711097-4	57A- 9
0711098-3	57A- 5
0711098-4	57A- 5
0711100	33- 2
0711100-1	33- 4
0711100-10	33- 5
0711100-11	33- 5
0711100-12	33- 3
0711100-4	33- 4
0711100-5	33- 2
0711100-6	33- 5
0711100-7	33- 3
0711100-8	33- 3
0711100-9	33- 3
0711101-1	49- 1
0711101-10	16- 78
0711101-10	17- 40
0711101-11	16- 79
0711101-11	17- 41
0711101-12	49- 34
0711101-13	16- 76
0711101-13	17- 39
0711101-14	49- 10
0711101-15	16- 83
0711101-15	17- 45
0711101-16	16- 84
0711101-16	17- 46
0711101-17	16- 88
0711101-20	122- 43
0711101-20	123- 42
0711101-22	49- 1
0711101-32	16- 77
0711101-33	49- 1
0711101-4	16- 80
0711101-4	17- 42
0711101-6	16- 82
0711101-6	17- 44
0711101-7	49- 30
0711101-7	16- 85
0711101-7	17- 47
0711101-8	16- 81
0711101-8	17- 43
0711102	49- 2
0711109-1	17- 64
0711109-2	17- 65
0711110-1	53- 15
0711110-2	53- 16
0711110-5	53- 15
0711111-1	49- 9
0711112-5	122- 63

PART NUMBER	FIGURE AND INDEX NO.
0711112-5	123- 61
0711113-1	18A- 4
0711113-2	18A- 5
0711114-1	18A- 3
0711114-2	18A- 3
0711115-1	18A- 6
0711115-2	18A- 6
0711117-1	33- 22
0711117-1	33- 22
0711117-2	33- 22
0711118-1	18A- 7
0711131-1	16- 86
0711131-1	17- 48
0711131-2	16- 86
0711131-2	17- 48
0711131-3	16- 86
0711131-4	16- 86
0711132-1	48A- 5
0711132-2	48A- 5
0711133-1	122- 57
0711133-11	53- 17
0711133-2	53- 18
0711133-2	122- 57
0711710-11	55- 28
0711710-16	55- 28
0712000-10	33- 27
0712000-11	33- 36
0712000-12	33- 40
0712000-13	33- 30
0712000-17	33- 43
0712000-2	33- 42
0712000-22	36- 21
0712000-23	33- 43
0712000-28	33- 27
0712000-3	33- 43
0712000-31	33- 27
0712000-32	33- 34
0712000-34	33- 29
0712000-35	33- 38
0712000-36	33- 43
0712000-38	33- 39
0712000-4	33- 38
0712000-5	33- 34
0712000-6	33- 39
0712000-7	35- 30
0712000-8	33- 35
0712000-9	33- 29
0712003-1	33- 30
0712003-2	33- 30
0712004-1	33- 8
0712006-1	33- 32
0712007-1	33-28A
0712007-2	33- 40
0712007-3	33- 40
0712007-4	33- 28
0712007-5	33- 36
0712007-6	33- 35
0712008-1	33-51A
0712008-1	57A- 15
0712009-1	33-51A
0712009-1	57A- 16
0712201	33- 24
0712201-2	33- 26
0712201-3	33- 24
0712202	33- 32
0712202-5	33- 32
0712203	35- 1
0712203-1	35- 2
0712203-4	36- 8
0712204-4	35- 25
0712204-5	35- 24
0712205-1	35- 27
0712205-1	36- 18
0712205-10	35- 26
0712205-10	36- 17

PART NUMBER	FIGURE AND INDEX NO.
0712205-11	36- 16
0712205-12	35- 25
0712205-13	35- 25
0712205-2	35- 27
0712205-2	36- 19
0712206	35- 33
0712206	36- 24
0712206-2	35- 35
0712206-2	36- 26
0712207-1	35- 31
0712207-1	36- 22
0712207-2	35- 32
0712207-2	36- 23
0712208	35- 8
0712208	36- 5
0712209	33- 25
0712211	33- 9
0712212	33- 33
0712213	10- 15
0712301-1	35- 40
0712301-1	36- 29
0712301-2	35- 41
0712301-2	36- 30
0712301-3	35- 42
0712301-3	36- 31
0712301-4	35- 43
0712301-4	36- 32
0712302-1	35- 36
0712302-1	36- 27
0712302-2	35- 36
0712302-2	36- 27
0712303-1	33- 48
0712303-2	33- 48
0712304-1	33- 37
0712304-1	33- 54
0712304-10	35- 38
0712304-12	33- 53
0712304-2	33- 41
0712304-3	35- 37
0712304-4	35- 37
0712304-7	42- 5
0712304-7	104- 23
0712305-3	35- 28
0712305-4	35- 28
0712306-1	35- 4
0712306-10	35- 7
0712306-10	36- 4
0712306-2	35- 6
0712306-9	35- 5
0712306-9	36- 3
0712307-1	11- 53
0712307-2	11- 54
0712309-1 ~~1.22~~ 17.76	105- 28
0712309-10	33- 51
0712309-11	33- 39
0712309-12	33- 39
0712309-4	35- 11
0712309-5	33- 49
0712309-5	105- 32
0712309-6	33- 49
0712309-6	105- 33
0712309-7	33- 50
0712309-7	105- 34
0712309-8	33- 50
0712309-8	105- 35
0712309-9	33- 51
0712311-14	35- 14
0712311-15	35- 1
0712311-3	35- 15
0712311-4	36- 1
0712311-7	35- 3
0712311-7	36- 2
0712311-8	36- 1
0712311-9	35- 1
0712313-1	11- 53

PART NUMBER	FIGURE AND INDEX NO.
0712313-2	11- 54
0712400	37- 5
0712400-3	37- 8
0712400-4	37- 11
0712400-6	37- 9
0712400-9	37- 5
0712401-3	37- 1
0712401-9	37- 1
0712500-1 - 10.77	110- 33
0712500-1 - 10.77	139-
0712500-10	139- 5
0712500-11 - 11.71	139- 12
0712500-13 - 10.09	139- 16
0712500-14	139- 2
0712500-16	139- 10
0712500-17	139- 15
0712500-18	139- 18
0712500-19	139- 20
0712500-2	110- 34
0712500-2	139-
0712500-5	139- 1
0712500-6	139-
0712500-7 - 1.34	139- 13
0712500-8	139- 3
0712500-9	139- 9
0712501	139- 14
0712502 - 2.48	139- 17
0712601	34-
0712601-2	34- 1
0712601-3	34- 2
0712601-4	34- 4
0712603-2	111- 11
0712604-1	111- 8
0712605-1	111- 8
0713000-10	19- 30
0713000-10	21- 21
0713000-11	19- 28
0713000-11	21- 19
0713000-12	19- 29
0713000-12	21- 20
0713000-17	19- 5
0713000-17	21- 7
0713000-2	27- 10
0713000-20	27- 4
0713000-22	27- 5
0713000-3	27- 11
0713000-55	19- 28
0713000-55	21- 19
0713000-56	19- 29
0713000-56	21- 20
0713000-61	19- 6
0713000-61	21- 8
0713000-62	19- 7
0713000-62	21- 9
0713001-1	52- 14
0713001-2	52- 14
0713001-3	52- 14
0713002-1	19- 11
0713002-1	20- 11
0713002-2	19- 16
0713002-2	20- 16
0713002-3	19- 12
0713002-3	20- 12
0713002-3	21- 14
0713002-3	22- 13
0713002-4	19- 10
0713002-4	20- 10
0713002-5	21- 13
0713002-5	22- 12
0713002-6	21- 18
0713002-6	22- 17
0713002-7	21- 12
0713002-7	22- 11
0713003-1	58- 47
0713003-10	58- 42

PART NUMBER	FIGURE AND INDEX NO.
0713003-18	58- 32
0713003-23	58- 62
0713003-24	58- 61
0713003-40	58- 52
0713003-41	58- 51
0713003-42	58- 50
0713003-45	85- 31
0713003-51	31- 33
0713003-51	111- 19
0713004-1	19- 3
0713004-1	21- 5
0713004-2	19- 3
0713004-2	21- 5
0713005-3	19- 10
0713005-3	20- 10
0713005-3	21- 12
0713005-3	22- 11
0713005-4	19- 10
0713005-4	20- 10
0713005-4	21- 12
0713005-4	22- 11
0713006 15.12	19- 9
0713006	20- 9
0713006	21- 11
0713006	22- 10
0713007-1	19- 4
0713007-1	21- 6
0713007-2	19- 4
0713007-2	21- 6
0713007-7	20- 4
0713007-7	22- 5
0713007-8	20- 4
0713007-8	22- 5
0713008-1	19- 17
0713008-1	20- 17
0713008-1	21- 40
0713008-1	22- 39
0713008-2	19- 17
0713008-2	20- 17
0713008-2	21- 40
0713008-2	22- 39
0713009-1	58- 53
0713009-1	59- 51
0713009-1	60- 43
0713009-1	64- 16
0713009-1	64- 33
0713009-2	58- 43
0713009-2	59- 44
0713009-2	60- 33
0713009-2	64- 4
0713009-2	64- 22
0713010	59- 41
0713010	60- 31
0713011-12	65- 15
0713011-13	65- 14
0713014	52- 19
0713015-6	19- 25
0713015-6	20- 25
0713015-6	28- 6
0713017	114- 4
0713017-21	114- 4
0713017-22	114- 23
0713018-1	9- 6
0713018-2	9- 7
0713018-3	38- 3
0713018-4	38- 1
0713018-5	38- 1
0713019-1	85- 53
0713019-100	85- 18
0713019-102	85- 22
0713019-104	85- 52
0713019-16	85- 8
0713019-19	85- 7
0713019-20	85- 1
0713019-24	85- 9

PART NUMBER	FIGURE AND INDEX NO.
0713019-3	85- 26
0713019-33	78- 37
0713019-33	79- 22
0713019-33	80- 36
0713019-33	80- 62
0713019-35	85- 18
0713019-37	85- 20
0713019-41	85- 2
0713019-43-156	85- 32
0713019-7	85- 34
0713019-75	85- 19
0713019-78	85- 17
0713019-85	85- 4
0713019-86	85-27
0713019-88	85- 25
0713019-90	85- 22
0713019-91	85- 29
0713019-93	85- 22
0713019-94-156	85- 32
0713019-95	85- 25
0713019-98	85- 1
0713019-99	85- 17
0713020-1	87- 25
0713020-1	88- 25
0713020-2	87- 26
0713020-2	88- 26
0713023-3	28- 12
0713023-3	110- 8B
0713023-7	19- 35
0713023-7	20- 25
0713023-7	28- 9
0713023-7	110- 8A
0713025-1	110- 7
0713025-2	110- 5
0713026-4 2.33	58- 7
0713026-4 187	60- 9
0713026-4	60- 68
0713026-4	63- 35
0713026-4	63- 39
0713026-4	63-41N
0713026-4	63A- 39
0713026-4	63A- 41
0713026-4	92- 46
0713026-4	113- 17
0713026-5 3.08	58- 6
0713026-5	59- 7
0713026-5	60- 8
0713026-5	63- 36
0713026-5	63- 38
0713026-5	63A- 36
0713026-5	63A- 38
0713026-7	63- 37
0713026-7	63A- 37
0713026-9	63- 35
0713026-9	63- 41
0713026-9	63A- 35
0713026-9	63A- 41
0713027	58- 12
0713028-1	61- 11
0713028-3	61- 12
0713028-3	62- 15
0713028-3	63- 67
0713028-3	63A- 68
0713028-8	61- 12
0713028-8	62- 15
0713028-8	63- 67
0713028-8	63A- 68
0713029	114- 12
0713029	114- 26
0713032	110- 8B
0713032-1	110- 12
0713032-2	110- 13
0713032-3	110- 11
0713032-4	110- 10
0713035 3.67	58- 8

PART NUMBER	FIGURE AND INDEX NO.
0713035	58- 76
0713035	59- 9
0713035	60- 10
0713035	63- 34
0713035	63A- 34
0713035	86- 57
0713036-2	111A- 5
0713037	87- 23
0713037	88- 23
0713038	61- 29
0713038	63- 45
0713038	63A- 45
0713041	58- 9
0713041	59- 10
0713041	60- 62
0713041	73- 44
0713041	90- 1
0713041-1	63- 24
0713041-1	90- 1
0713042-1	103- 19
0713042-10	103- 19
0713042-10	103- 19
0713042-11	103- 23
0713042-12	103- 19
0713042-12	103- 19
0713042-13	103- 23
0713042-14	103- 19
0713042-14	103- 19
0713042-15	103- 19
0713042-15	103- 19
0713042-16	103- 19
0713042-16	103- 19
0713042-6	103- 19
0713042-6	103- 19
0713042-7	103- 19
0713042-7	103- 19
0713042-8	103- 23
0713042-9	103- 23
0713046	50- 10
0713047	127- 19
0713047	128- 24
0713049-10	52- 15
0713049-4	52- 15
0713049-7	52- 16
0713050	59- 12
0713050	60- 13
0713050	73- 12
0713050	74- 12
0713050-2	63- 22
0713050-2	63- 33
0713050-2	73- 12
0713050-2	73- 39
0713050-2	74- 41
0713052	28- 4
0713053-1	30- 5
0713053-2	30- 5
0713053-3	21- 42
0713053-3	22- 41
0713053-4	21- 42
0713053-4	22- 41
0713054-1	24- 45
0713054-2	24- 45
0713054-3	24- 46
0713054-4	24- 46
0713057-1	27- 12
0713058	59- 57
0713058	127- 10
0713059-1	21- 39
0713059-1	22- 38
0713059-2	21- 39
0713059-2	22- 38
0713062-2	62- 23
0713062-3 19.66	62- 26
0713062-4	62- 27
0713062-4	99- 1

PART NUMBER	FIGURE AND INDEX NO.
0713062-5	62- 29
0713062-6	62- 30
0713062-6	62- 31
0713062-6	63- 19
0713062-6	63A- 24
0713062-7 19.55	62- 24
0713063	87- 45
0713063	88- 50
0713064-2	62- 14
0713064-2	63- 68
0713065	65- 21
0713066-1	50- 8
0713067-1	21- 46
0713067-2	19- 37
0713067-2	21- 47
0713068-1	65- 21
0713070-11	87- 44
0713070-11	88- 49
0713070-12	87- 34
0713070-12	88- 39
0713070-15	87- 31
0713070-15	87- 31
0713070-15	88- 35
0713070-15	88- 35
0713070-16	87- 49
0713070-16	88- 53
0713070-20	19- 38
0713070-20	21- 43
0713070-22	87- 49
0713070-22	88- 53
0713070-23	87- 27
0713070-23	88- 29
0713070-24	87- 51
0713070-24	88- 38
0713070-25	87- 31
0713070-25	87- 31
0713070-25	88- 34
0713070-25	88- 34
0713070-28	87- 49
0713070-28	88- 53
0713070-31	87- 49
0713070-31	88- 53
0713070-32	87- 31
0713070-32	88- 35
0713070-33	87- 27
0713070-33	88- 29
0713070-4	87- 26
0713070-4	88- 27
0713070-5	87- 26
0713070-5	88- 28
0713070-6	87- 36
0713070-6	88- 41
0713070-9	87- 41
0713070-9	88- 46
0713072-1	60- 12
0713073	127- 11
0713074-1	54- 2
0713074-1	55- 2
0713074-1	56- 1
0713074-1	56A- 1
0713074-1	56B- 2
0713080-1	140- 5
0713081-1	140- 1
0713082-1	140- 8
0713083-1	106- 31
0713084-1	140- 6
0713085-1	140- 7
0713086-1	106- 41
0713086-2	106- 42
0713087-1	106- 40
0713088-3	106- 28
0713092-1	106- 29
0713093-2-243	52- 29
0713093-2-243	106- 39
0713095-1	106- 36

PART NUMBER	FIGURE AND INDEX NO.
0713096-1	106- 26
0713096-1	140-
0713098-3	103- 25
0713098-4	103- 25
0713099-1	63- 74
0713099-1	63- 76
0713099-1	63A- 76
0713099-1	63A- 78
0713100-13	27- 10
0713100-15	27- 4
0713100-16	20- 28
0713100-17	20- 28
0713100-23	20- 6
0713100-23	22- 7
0713100-24	20- 7
0713100-24	22- 8
0713100-25 36.40	19- 35
0713100-25	20- 34
0713100-26	21- 22
0713100-26	22- 47
0713100-3	20- 39
0713100-3	22-28A
0713100-30	20- 28
0713100-31	22- 20
0713100-4	20- 39
0713100-4	22-28A
0713100-5	20- 29
0713100-5	22- 18
0713100-6	22- 19
0713100-7	22- 20
0713100-8	22- 50
0713100-9	20- 5
0713100-9	22- 6
0713104-1	65- 14
0713105-1	20- 3
0713105-1	22- 4
0713105-2	20- 3
0713105-2	22- 4
0713106-1	24- 17
0713106-1	27- 13
0713106-2	24- 27
0713106-2	27- 13
0713107-1	27- 12
0713108-2	65- 22
0713108-4	65- 22
0713115-1	19- 26
0713115-1	20- 26
0713115-1	22- 48
0713116-1	19- 27
0713116-1	20- 27
0713116-1	22- 49
0713118-1	27- 5
0713119-1	14-29A
0713123-1	111A- 6
0713124-1	1- 32
0713124-1	1A- 25
0713125-1	20- 2
0713125-1	22- 2
0713125-1	63A- 1
0713125-13	63A- 1
0713126-1	63A- 2
0713127-1	63A- 7
0713128-1	91- 21
0713129-3	63A- 12
0713130-1	111- 39
0713131-1	63A- 74
0713132-1	111- 38
0713133-1	85- 26
0713135-1	20- 38
0713135-1	22- 52
0713135-1	84- 28
0713139-1	20- 38
0713139-1	22- 52
0713139-1	84- 29
0713140-1	20- 38

PART NUMBER	FIGURE AND INDEX NO.
0713140-1	22- 52
0713140-1	84- 30
0713141-4	63A- 33
0713141-4	63A- 44
0713141-4	85- 48
0713148-1	91- 5
0713155-2	50- 25
0713155-3	50- 26
0713156-1	122- 56
0713156-1	123- 55
0713159-1	63A- 89
0713160-1	63A- 88
0713171-1	63A- 41
0713200-12	58- 72
0713200-12	59- 70
0713200-14	58- 69
0713200-17-110	58- 65
0713200-19	58- 74
0713200-2	61- 1
0713200-27	61- 7
0713200-27	93- 1
0713200-30-110	58- 66
0713200-32-110	58- 68
0713200-33-110	58- 67
0713200-34	58- 71
0713200-37	61- 8
0713200-4	61- 32
0713200-7	61- 32
0713200-9	58- 73
0713200-9	59- 71
0713201-1	59- 69
0713201-10	59- 73
0713201-16	59- 13
0713201-17	59- 24
0713201-17	59- 54
0713201-17	60- 30
0713201-17	60- 40
0713201-19	59- 48
0713201-2	59- 73
0713201-25	59- 1
0713201-26	59- 2
0713201-27-146	59- 58
0713201-29-146	59- 60
0713201-30-146	59- 61
0713201-31	59- 48
0713201-33-146	59- 58
0713201-6	59- 63
0713201-8	59- 43
0713201-9	59- 73
0713202-1	59- 23
0713202-1	60- 30
0713206-2	103- 25
0713206-3	103- 25
0713206-4	103- 25
0713207-1	53- 14
0713207-1	127- 11
0713207-1	128- 16
0713207-2	53- 14
0713207-2	128- 16
0713208-1	63- 85
0713208-1	63A- 87
0713208-2	63- 84
0713208-2	63A- 86
0713209-1	63- 20
0713209-1	63A- 25
0713210-11	59- 56
0713210-11	60- 50
0713210-11	64- 28
0713210-15	64- 28
0713210-2	58- 59
0713210-2	128- 21
0713210-3	58- 60
0713210-3	128- 15
0713210-4	53- 15
0713210-4	127- 14

PART NUMBER	FIGURE AND INDEX NO.
0713210-4	128- 19
0713210-6	59- 57
0713210-6	128- 16
0713210-7	128- 21
0713210-9	59- 56
0713210-9	60- 50
0713210-9	64- 28
0713210-9	127- 16
0713213	60- 51
0713213	61- 10
0713213	127- 17
0713213	128- 22
0713214-1	60- 71
0713214-10	60- 37
0713214-11	60- 74
0713214-12	60- 74
0713214-13	60- 75
0713214-15	60- 41
0713214-17	60- 47
0713214-19	60- 48
0713214-2	60- 72
0713214-20	60- 49
0713214-23-146	60- 1
0713214-24-156	60- 1
0713214-25	60- 37
0713214-28	62- 2
0713214-29	62- 12
0713214-3	21- 4
0713214-3	60- 70
0713214-32	60- 37
0713214-4	62- 1
0713214-5	62- 11
0713214-9	60- 46
0713215-2	103- 25
0713216-2	103- 25
0713217-2	103- 25
0713218-1	63A- 11
0713222-1	63A-40A
0713222-1	127- 40
0713222-1	128- 37
0713302-5	63- 22
0713302-5	63- 44
0713302-5	63- 85
0713302-5	63A- 27
0713302-5	74- 12
0713302-5	81- 11
0713302-5	81A- 15
0713302-5	85- 15
0713302-6	63- 43
0713302-6	63A- 43
0713302-6	84- 33
0713302-6	85- 16
0713303-11	120B- 16
0713303-11	120C- 17
0713303-2 1.04	63- 34
0713303-2	63- 35
0713303-2	63- 36
0713303-2	63- 39
0713303-2	63- 41
0713303-2	63A- 34
0713303-2	63A- 35
0713303-2	63A- 36
0713303-2	63A- 39
0713303-2	63A- 41
0713303-2	84- 11
0713303-2	85- 33
0713303-2	92- 46
0713303-2	113- 13
0713303-7	64- 14
0713303-7	64- 31
0713303-9	120B- 15
0713303-9	120C- 16
0713306-1	63- 24
0713306-1	91- 1
0713307-1	91- 9

PART NUMBER	FIGURE AND INDEX NO.
0713307-2	91- 10
0713495-10	23- 78
0713495-10	24- 47
0713495-11	23- 69
0713495-12	23- 69
0713495-13	23- 75
0713495-13	24- 38
0713495-14	23- 75
0713495-14	24- 38
0713495-15	23- 66
0713495-16	23- 66
0713495-17	23- 80
0713495-17	24- 48
0713495-18	23- 49
0713495-18	23- 52
0713495-5 1.43	23- 45
0713495-5	23- 51
0713495-53 2.01	23- 36
0713495-53	24- 59
0713495-54 2.01	23- 37
0713495-54	24- 60
0713495-55	23- 79
0713495-55	24- 49
0713495-57	23- 43
0713495-58 1.64	23- 51
0713495-59	23- 47
0713495-6	23- 53
0713495-60	23- 52
0713495-61	23- 42
0713495-62 ~ 26.46	23- 51
0713495-63	23- 41
0713495-64 33.89	23- 51
0713495-7	23- 48
0713495-8	23- 52
0713495-9	23- 78
0713495-9	24- 47
0713496-3	23- 22
0713496-3	24- 14
0713496-4	23- 33
0713496-4	24- 24
0713497-3	23- 81
0713497-3	24- 52
0713498	93- 45
0713498	94- 52
0713500-1	19- 36
0713500-1	21- 48
0713501-1	20- 2
0713501-1	22- 2
0713501-1	63- 1
0713501-3	63- 2
0713501-4	63- 4
0713501-4	63A- 4
0713501-5	63- 5
0713501-5	63A- 5
0713502-1	63- 65
0713502-10	63- 65
0713502-3-279	63- 8
0713502-5-279	63- 8
0713502-7-279	63- 8
0713502-9	63- 65
0713503-1	64- 25
0713503-11	64- 1
0713503-12	64- 11
0713503-16	64- 30
0713503-17	64- 25
0713503-25	64- 19
0713503-6	64- 19
0713503-7	64- 12
0713503-7	64- 29
0713503-8-279	64- 8
0713504-1	63- 53
0713504-2	63- 53
0713504-2	63A- 53
0713505-1	85- 26
0713506-1	20- 35

PART NUMBER	FIGURE AND INDEX NO.
0713506-1	22- 44
0713506-2	20- 36
0713506-2	22- 45
0713511-1	111- 2A
0713513-1	53- 11
0713513-2	53- 10
0713514-1	64- 1
0713514-10-279	64- 8
0713514-18-279	64- 8
0713514-6-279	64- 8
0713515-1	64- 11
0713516-1	64- 13
0713517-1	64- 5
0713518-1-279	63A- 10
0713518-14-279	63A- 10
0713518-15-279	63A- 9
0713518-3-279	63A- 9
0713518-5-279	63A- 9
0713519-1	63A- 66
0713519-2-279	63A- 66
0713520-1	53- 10
0713520-2	53- 11
0713521-1	64- 25
0713521-4	64- 25
0713701-2	91- 16
0713705-4	63A- 99
0713721-1	63A- 95
0713724-1	64- 18
0716101	16- 37
0716101	17- 17
0716102	96- 29
0716102	96A- 27
0716102	97- 26
0716119-10	16- 7
0716119-10	96- 1
0716119-4	16- 8
0716119-6	16- 10
0716122	97- 1
0716122	96- 2
0716124-6	6- 21
0716125	6A- 12
0716125-2	6- 21
0716126	6- 21
0716127-1	6A- 14
0716127-1	96- 2
0716127-1	97- 1
0716127-2	6A- 14
0716128-10	98- 12
0716128-11	98- 21
0716128-11	98- 22
0716128-12	98- 24
0716128-13	98- 18
0716128-15	98- 14
0716128-16	98- 28
0716128-17	98- 30
0716128-18	98- 43
0716128-19	98- 34
0716128-20	98- 44
0716128-21	98- 23
0716128-22	98- 32
0716128-23	98- 2
0716128-24	98- 9
0716128-25	98- 7
0716128-26	98- 3
0716128-27	98- 41
0716128-28	60- 78
0716128-28	63- 37
0716128-28	63A- 37
0716128-28	98- 45
0716128-29	60- 79
0716128-29	98- 47
0716128-3	98- 15
0716128-30	62- 42
0716128-30	63- 19
0716128-30	63A- 24

PART NUMBER	FIGURE AND INDEX NO.
0716128-30	98- 48
0716128-31	60- 78
0716128-31	98- 46
0716128-32	98- 36
0716128-33	98-
0716128-34	98-
0716128-4	98- 1
0716128-45	17- 38
0716128-5	98- 1
0716128-6	98- 10
0716128-7	98- 11
0716128-8	98- 16
0716128-9	98- 17
0716167	96- 31
0716167	97- 28
0716167	127- 21
0716167	128- 26
0716612-202	96- 21
0716612-202	96A- 19
0716612-202	97- 18
0720000-3	6- 16
0720001-10 37.71	5- 16
0720001-16 33.99	5- 1
0720001-27	5- 10
0720001-33 48.29	3- 1
0720001-38	3- 1
0720001-42	3- 1
0720001-43	3- 1
0720001-44	5- 9
0720001-45	5- 1
0720001-5 18.70	5- 3
0720001-51	3- 15
0720001-52	3- 25
0720001-54	3- 15
0720001-55 38.50	3- 25
0720001-62	5- 9
0720001-66	5- 9
0720001-67	5- 10
0720001-67	5A- 12
0720001-68	5- 10
0720001-68	5A- 12
0720001-69	5- 3
0720001-7	5- 9
0720001-8 13.21	5- 10
0720002-1	1- 17
0720002-10	1- 17
0720002-10	1A- 14
0720002-2	1- 17
0720002-9	1- 17
0720002-9	1A- 14
0720004	122- 54
0720004	123- 53
0720004-1 7.79	6- 40
0720005-1	2- 49
0720005-1	2B- 40
0720007-1	6A- 7
0720007-2	6A- 8
0720601-14 44.28	3- 16
0720601-15 10.33	3- 26
0720601-16 8.24	3- 26
0720601-17 9.57	5- 2
0720601-18 9.57	5- 17
0720601-20 [redacted] 1661	5- 4
0720601-205	3- 17
0720601-24 7.93	5- 11
0720602-1	3A- 4
0720607-1	2B- 24
0720607-2	2B- 25
0720607-3	3A- 5
0720607-4	3A- 6
0720608-2 2.64	2B- 26
0720608-2	3- 28
0720608-3	3A- 7
0720608-7 11.86	2- 34
0720608-7	2A- 23

PART NUMBER	FIGURE AND INDEX NO.
0720608-7 ~~2346~~ 11.88	2B- 26
0720609-1	3A- 8
0720610-1	3A- 15
0720610-2	3A- 16
0721100-1	2- 7
0721100-10	2- 17
0721100-12	2- 18
0721100-13	2- 17
0721100-14	2- 18
0721100-17	2- 12
0721100-18	2- 12
0721100-19	2- 13
0721100-2	2- 7
0721100-20	2- 13
0721100-23	2A- 5
0721100-23	2B- 8
0721100-24	2A- 5
0721100-24	2B- 8
0721100-25	2A- 6
0721100-25	2B- 9
0721100-26	2A- 6
0721100-26	2B- 9
0721100-3	2- 8
0721100-4	2- 8
0721100-5	2- 9
0721100-5	2- 14
0721100-5	2- 19
0721100-5	2A- 11
0721100-5	2B- 12
0721100-6	2- 10
0721100-6	2- 15
0721100-6	2- 20
0721100-6	2- 24
0721100-6	2A- 10
0721100-6	2A- 14
0721100-6	2B- 12
0721100-6	2B- 17
0721100-7	2- 11
0721100-7	2- 16
0721100-7	2- 21
0721100-7	2- 23
0721100-7	2A- 9
0721100-7	2A- 13
0721100-7	2B- 12
0721100-7	2B- 16
0721101	92- 37
0721105-1	92- 38
0721105-10	92- 38
0721105-3	92- 42
0721105-4	92- 43
0721105-5	92- 45
0721105-7	92- 40
0721105-8	92- 44
0721107-1	2- 52
0721107-1	2A- 39
0721107-1	2B- 43
0721107-2	2- 52
0721107-2	2A- 39
0721107-2	2B- 43
0721111-1	2- 21
0721111-1	2A- 11
0721111-16	2A- 11
0721111-2	2- 21
0721111-3	2- 54
0721111-3	2A- 41
0721111-3	2B- 42
0721111-4	2- 54
0721111-4	2A- 41
0721111-4	2B- 42
0721111-5	2- 53
0721111-5	2A- 40
0721111-7	2- 22
0721111-7	2A- 12
0721111-8	2- 22
0721111-8	2A- 12

PART NUMBER	FIGURE AND INDEX NO.
0721112-1	2- 46
0721112-1	2A- 35
0721112-1	2B- 38
0721112-2	2- 46
0721112-2	2A- 35
0721112-2	2B- 38
0721112-3	2- 45
0721112-3	2A- 34
0721112-3	2B- 37
0721112-4	2- 45
0721112-4	2A- 34
0721112-4	2B- 37
0721114-1	92-37B
0721115-1	92-37A
0721116-1	2A- 8
0721116-1	2B- 11
0721116-2	2A- 8
0721116-2	2B- 11
0721118-1	6A- 12
0721200-2	5- 22
0721200-3	5- 23
0721200-4	5- 23
0721200-51	5- 23
0721200-63	5- 22
0721201-1	5- 23
0721201-2	5- 23
0721201-3	5- 22
0721201-4	5- 22
0721201-51	5- 22
0721201-67	5- 22
0721300-1	6- 29
0721300-13	6- 28
0721300-16	6- 34
0721300-18 4.07	6- 38
0721300-19	6- 35
0721300-4	6- 32
0721300-9	6- 33
0721302-1	6- 28
0721303-1	6- 50
0721303-1	6A- 34
0721303-11	6A- 34
0721303-12	6A- 37
0721303-13	6A- 40
0721303-2	6- 54
0721303-2	6A- 37
0721303-3	6- 55
0721303-3	6A- 39
0721303-4	6- 56
0721303-4	6A- 40
0721305-1	6-50A
0721305-1	6A- 34
0721305-11	6A- 34
0721305-12	6A- 37
0721305-13	6A- 40
0721305-2	6- 54
0721305-2	6A- 37
0721305-3	6- 55
0721305-3	6A- 39
0721305-4	6- 56
0721305-4	6A- 40
0721400-1	4-
0721400-10	4- 3
0721400-13 9.64	4- 7
0721400-14	4- 7
0721400-17	4- 8
0721400-18	4- 8
0721400-19	4- 15
0721400-2	4-
0721400-20	4- 15
0721400-21	4-
0721400-22	4-
0721400-23	4- 16
0721400-24	4- 16
0721400-3 31.19	4- 1
0721400-4	4- 1

PART NUMBER	FIGURE AND INDEX NO.
0721400-5	4- 16
0721400-6	4- 16
0721400-9	4- 4
0722011-1	6- 10
0722100-1	3- 18
0722100-1	3A- 14
0722100-3	1- 37
0722100-3	1A- 29
0722100-4	1- 36
0722100-4	1A- 28
0723600-1	9- 1
0723600-2	9- 1
0723600-6	9- 9
0723600-7	9- 1
0723600-8	9- 1
0723601-1	9- 10
0723601-2	9- 12
0723604-1	9- 10
0723605-1	9-15A
0723605-2	9-15A
0723605-3	9- 15
0723605-4	9- 15
0724115-1	7- 22
0726000-10	6- 53
0726000-11	6- 8
0726000-13	6- 1
0726000-2	6- 1
0726000-5	6- 4
0726000-6	6- 3
0726000-7	6- 7
0726000-8	6- 6
0726000-9	6- 12
0726001-10	6- 1
0726001-13	6-50A
0726001-13	6A- 31
0726001-15	6A- 1
0726001-16	6A- 1
0726001-3	6- 2
0726001-3	6A- 3
0726001-5	6- 7
0726001-6	6- 6
0726001-7	6- 50
0726001-7	6A- 30
0726001-9	6- 1
0726002-1	6- 31
0726002-1	6A- 27
0726002-1	6A- 27
0726109-1	76- 69
0726109-1 18.06	77- 74
0726110-1	6- 48
0726110-1	6A- 28
0731000-1	10- 22
0731000-11	10- 20
0731000-12	10- 32
0731000-13	12- 22
0731000-14	12- 23
0731000-15	10- 31
0731000-16	10- 29
0731000-17	10- 35
0731000-18	10- 36
0731000-19	12- 27
0731000-2	10- 23
0731000-21	10- 37
0731000-22	10- 33
0731000-23	10- 30
0731000-24	10- 38
0731000-25	10- 34
0731000-26	10- 28
0731000-27	12- 29
0731000-28	10- 27
0731000-3	10- 24
0731000-30	12- 25
0731000-31	12- 5
0731000-32	10-
0731000-33	10- 8

PART NUMBER	FIGURE AND INDEX NO.
0731000-34	10- 7
0731000-35	12- 24
0731000-36	12- 17
0731000-37	10- 21
0731000-38	10- 16
0731000-39	12- 21
0731000-4	10- 25
0731000-40	12-
0731000-41	10-
0731000-43	10- 9
0731000-45	12- 28
0731000-48	10- 39
0731000-49	12-16A
0731000-5	10- 26
0731000-50	12-16B
0731000-6	12- 14
0731000-7	12- 15
0731000-8	12- 16
0731000-9	12- 26
0731100-11	12- 13
0731100-12	12- 7
0731100-13	10- 11
0731100-14	10- 10
0731100-5	12- 5
0731100-6	12- 8
0731100-7	10- 13
0731100-9	10- 12
0732000-153	13- 4
0732000-154	13-
0732000-159	13-
0732000-160	13-
0732100-10	13- 13
0732100-11	13- 12
0732100-3	13- 14
0732100-4	13- 11
0732100-6	11- 27
0732100-7	11- 28
0732100-8	11- 29
0732101-1	11- 36
0732101-10	11- 36
0732101-11	11- 36
0732101-4	11- 26
0732101-5	11- 15
0732101-6	11- 14
0732101-7	11- 5
0732101-7	11- 41
0732102-3	11- 61
0732102-4	11- 61
0732102-5	11- 48
0732102-6	11- 51
0732102-7	11- 46
0732102-8	11- 49
0732103-1	11- 22
0732103-2	11- 22
0732106	11- 44
0732106-1	11- 44
0732600-2	11- 32
0732600-3	11- 34
0732600-4	11-
0732600-5	11- 30
0732600-6	11- 31
0732600-7	11- 33
0732602-1	11- 22
0732602-2	11- 23
0732603-1	11- 25
0732604-1	11- 24
0732605-2	11- 5
0732606-3	11- 7
0732607-1	11- 6
0732608-1	11- 16
0732609-1	11- 8
0732610-1	11- 21
0732610-2	11- 20
0732610-3	11- 19
0732610-4	11- 18

PART NUMBER	FIGURE AND INDEX NO.
0732610-5	11- 17
0732611-1	11- 9
0732611-2	11- 10
0732611-3	11- 11
0732611-4	11- 12
0732611-6	11- 11
0732613-1	11- 43
0732616-1	11- 64
0733100	12- 6
0733101-1	12- 18
0733101-2	13- 16
0733101-3	13- 16
0733102	12- 9
0733102-3	12- 12
0733102-5	12- 9
0733103	12-11A
0733103	12A- 15
0733104-1	12A- 9
0734101	13- 32
0734102	13- 8
0734110-1	13- 9
0734110-2	13- 10
0734600-1	13-
0734600-19	13-
0734600-21	13-
0734600-23	13-
0734600-3	13- 30
0734600-4	13- 25
0734600-5	13- 24
0734600-7	13- 27
0734600-8	13- 29
0734600-9	13- 26
0734601-1	13- 5
0734601-2	13- 6
0734601-3	13- 7
0734602-1	13- 19
0734602-2	13- 22
0734602-3	13- 21
0734602-4	13- 20
0734604-1	13- 15
0734605-1	13- 23
0734606-1	13- 31
0734608-1	13- 28
0734609-1	13- 28
0734610-2	13- 16
0741000-7	38- 13
0741000-7	39- 16
0741001-1	38- 8
0741001-2	38- 8
0741001-3	38- 8
0741001-4	38- 8
0741001-5	38- 8
0741001-6	38- 8
0741004	38- 46
0741005-1	38- 38
0741005-2	38- 38
0741005-7	38- 39
0741005-8	38- 39
0741006	38- 64
0741006	39- 51
0741006-1	38- 64
0741006-1	39- 51
0741007-1	38- 6
0741007-1	122- 69
0741007-1	123- 66
0741008-1	38- 31
0741008-2	38- 32
0741008-3	38- 34
0741008-4	38- 33
0741008-5	38- 24
0741009-4	39- 3
0741009-5	39- 3
0741010-1	39-11A
0741010-2	39-11A
0741010-5	39-11A

PART NUMBER	FIGURE AND INDEX NO.
0741010-6	39-11A
0741011-10	39- 3
0741011-11	39- 3
0741011-4	39- 3
0741011-5	39- 3
0741011-6	39- 3
0741011-7	39- 3
0741013-1	39- 3
0741013-2	39- 3
0741014-1	39- 11
0741014-2	39- 11
0741015-1	39- 10
0741016-1	39- 12
0741017-1	38- 64
0741017-1	39- 51
0741018-1	38- 64
0741018-1	39- 51
0741019-1	39- 11
0741019-2	39- 11
0741103	38- 25
0742100-4 63.66	42- 8
0742100-5	42- 1
0742100-6	42- 5
0742100-8	42- 9
0742100-9	42- 7
0742102	42- 11
0742108-1	122- 74
0742109-1	122- 73
0742110-1	121- 23
0742110-16	121- 33
0742110-17	121- 34
0742110-19	121- 49
0742110-19	122- 45
0742110-19	123- 44
0742110-2	121- 23
0742110-20	121- 50
0742110-20	122- 46
0742110-20	123- 45
0742110-3	121- 25
0742110-5	121- 54
0742110-5	122- 54
0742110-6	121- 54
0742110-6	122- 54
0742110-7	121- 51
0742110-7	122- 28
0742110-7	123- 27
0742110-8	121- 52
0742111	121- 3
0742112	42- 4
0742114	123- 1
0742115-1	123- 22
0742115-11	122- 31
0742115-11	123- 30
0742115-12	122- 32
0742115-12	123- 31
0742115-15	122- 67
0742115-15	123- 6
0742115-16	122- 25
0742115-16	123- 24
0742115-17	122- 66
0742115-17	123- 64
0742115-18	122- 66
0742115-18	123- 64
0742115-19	122- 25
0742115-19	123- 24
0742115-2	123- 22
0742115-20	122- 26
0742115-20	123- 25
0742115-21	122- 37
0742115-21	123- 36
0742115-22	122- 38
0742115-22	123- 37
0742115-25	23- 52
0742115-25	122- 51
0742115-25	123- 50

PART NUMBER	FIGURE AND INDEX NO.
0742115-26	23- 50
0742115-26	122- 51
0742115-26	123- 50
0742115-28	122- 29
0742115-28	123- 28
0742115-3	122- 24
0742115-3	123- 23
0742115-31	122- 33
0742115-31	123- 32
0742115-33	122- 18
0742115-33	123- 13
0742115-34	122- 18
0742115-34	123- 13
0742115-37	122- 62
0742115-37	123- 60
0742115-4	122- 44
0742115-4	123- 43
0742115-44	122- 58
0742115-44	123- 57
0742115-45	122- 58
0742115-45	123- 57
0742115-5	122- 40
0742115-5	123- 39
0742115-50	122- 23
0742115-51	122- 23
0742115-6	122- 41
0742115-6	123- 40
0742115-7	122- 42
0742115-7	123- 41
0742116-2 2.56	121- 57
0742116-2	122- 52
0742116-2	123- 51
0742116-3 2.56	121- 57
0742116-3	122- 52
0742116-3	123- 51
0742117-2 15.91	122- 65
0742117-2	123- 63
0742117-3	122- 65
0742117-3	123- 63
0742117-4	122- 64
0742117-4	123- 62
0742117-5	122- 64
0742117-5	123- 62
0742119-1	122- 59
0742119-1	123- 58
0742200-4	133- 22
0742200-5	42- 7
0742200-5	105- 36
0742200-6	42- 10
0742373	122- 61
0742373	123- 59
0742400	42- 15
0742400	133-
0742400-10	133-
0742400-11	133- 22
0742401	133- 20
0742401-1	133- 42
0742401-10	133- 43
0742401-11	133- 51
0742401-12	133- 53
0742401-13	133- 52
0742401-14	133- 56
0742401-3	133- 55
0742401-4	133- 44
0742401-5	133- 45
0742401-6	133- 47
0742401-7	133- 48
0742401-8	133- 49
0742401-9	133- 50
0742410-12	39- 41
0742410-13	39- 39
0742410-14	40- 39
0742410-14	40A- 39
0742410-15	40- 7
0742410-15	40A- 7

PART NUMBER	FIGURE AND INDEX NO.
0742410-16	39- 34
0742410-17	39- 34
0742410-18	39- 42
0742410-19	39- 42
0742410-2	39- 34
0742410-201	40- 35
0742410-201	40A- 35
0742410-25	40- 35
0742410-25	40A- 35
0742410-3	39- 34
0742410-4	39- 42
0742410-5	39- 42
0742410-8	40- 4
0742410-8	40A- 4
0742410-9	40- 40
0742410-9	40A- 40
0743001-2	130-
0743001-4	130A-
0743008-1	40- 25
0743008-1	40A- 25
0743008-2	40- 26
0743008-2	40A- 26
0743009-1	40- 45
0743009-1	40A-38A
0743009-1	41- 9
0743011-1	41- 35
0743011-1	41A- 26
0743014-204	40A- 21
0743014-204	41A-
0743609-10	40- 43
0750028-2	99- 26
0750032-1	100- 1A
0750035-1	99- 23
0750038-1	71- 59
0750038-1	71A- 57
0750038-3	71- 59
0750038-3	71A- 57
0750100-11 - 1.24	93- 4
0750100-11	94- 3
0750100-11	95- 3
0750100-11	120D- 3
0750100-12	93- 14
0750100-12	94- 13
0750100-12	95- 13
0750100-12	120D- 13
0750100-13	75- 2
0750100-14	73- 48
0750100-17	75- 22
0750100-17	76- 22
0750100-18	99- 23
0750100-23	75- 49
0750100-5	75- 15
0750100-5	76- 15
0750100-6	75- 27
0750100-6	76- 27
0750100-6	77- 27
0750100-9	73- 6
0750100-9	74- 5
0750101-3	75- 23
0750101-3	76- 23
0750101-3	77- 23
0750101-61	128A-
0750101-62	128A-
0750102-1	75- 3
0750102-2	75- 4
0750103-1 - 109.32	93- 3
0750103-1	94- 2
0750103-1	95- 2
0750103-1	120D- 2
0750104-1	120D- 1
0750104-2	120D- 1
0750104-2	120D- 1
0750104-3	93- 2
0750104-3	94- 1
0750104-3	95- 1

PART NUMBER	FIGURE AND INDEX NO.
0750104-3	120D- 1
0750104-3	120D- 1
0750104-3	120D- 1
0750105-1	81- 58
0750106-1	75- 51
0750106-2	75- 53
0750108	75- 19
0750108	76- 19
0750108	77- 19
0750109	75- 17
0750109	76- 17
0750109	77- 17
0750110	75- 18
0750110	76- 18
0750110	77- 18
0750111	75- 25
0750111-10	75- 29
0750111-13	75- 28
0750111-14	75- 28
0750111-19	75- 34
0750111-19	76- 30
0750111-19	77- 30
0750111-24	75- 31
0750112	75- 33
0750113-1	75- 32
0750113-1	77- 33
0750113-3	76- 34
0750113-3	77- 73
0750114	75- 38
0750114-2	75- 38
0750115	73- 46
0750117-12	78- 8
0750117-14	78- 3
0750117-2	78- 1
0750117-20	78- 32
0750117-21	78- 23
0750117-21	80- 27
0750117-23	78- 4
0750117-24	78- 5
0750117-28	78- 19
0750117-29	79- 7
0750117-30	78- 44
0750117-30	79- 33
0750117-30	79- 33
0750117-30	80- 47
0750117-30	80- 47
0750117-31	75- 55
0750117-31	76- 57
0750117-31	77- 61
0750117-31	78- 45
0750117-31	79- 33
0750117-31	79- 34
0750117-31	80- 48
0750117-31	80- 48
0750117-32	78- 31
0750117-33	78- 40
0750117-37	78- 34
0750117-39	78- 38
0750117-4	78- 26
0750117-40	78- 29
0750117-40	78- 33
0750117-40	78- 41
0750117-41	78- 25
0750117-46	78- 6
0750117-48	78- 15
0750117-49	78- 12
0750117-5	78- 11
0750117-51	78- 22
0750117-52	75- 57
0750117-53	75- 60
0750117-9	78- 7
0750118-3	78- 47
0750118-3	79- 30
0750118-4	78- 46
0750118-4	79- 27

PART NUMBER	FIGURE AND INDEX NO.
0750119	73- 33
0750119	74- 30
0750121	75- 50
0750121	75- 50
0750121	76- 53
0750121	77- 57
0750123	75- 42
0750123-1	76- 37
0750125-1	102- 1
0750125-10	102- 15
0750125-11	102- 14
0750125-2	102- 2
0750125-2	102- 2
0750125-3	102- 3
0750125-4	102- 6
0750125-5	102- 9
0750125-6	102- 10
0750125-7	102- 11
0750125-8	102- 12
0750125-9	102- 13
0750126-13	76- 28
0750126-17	76- 33
0750126-20	76- 35
0750126-21	76- 25
0750126-4	77- 35
0750126-5	76- 29
0750126-6	76- 32
0750126-9	76- 27
0750127	76- 40
0750127-12	77- 42
0750127-13	77- 47
0750127-14	77- 42
0750127-15	77- 46
0750127-2	76- 40
0750127-2	77- 46
0750127-4	77- 48
0750127-5	77- 47
0750128-11	80- 19
0750128-11	80- 33
0750128-13	79- 13
0750128-13	80- 15
0750128-14	79- 20
0750128-14	80- 34
0750128-15	79- 21
0750128-15	80- 35
0750128-16	79- 25
0750128-16	80- 26
0750128-17	79- 16
0750128-17	80- 20
0750128-18	79- 6
0750128-19	79- 12
0750128-19	80- 12
0750128-20	79- 15
0750128-20	80- 29
0750128-21	79- 24
0750128-21	80- 25
0750128-22	79- 14
0750128-22	80- 16
0750128-23	79- 11
0750128-23	80- 11
0750128-24	79- 4
0750128-25	79- 1
0750128-26	79- 2
0750128-27	79- 3
0750128-32	80- 5
0750128-33	80- 6
0750128-35	80- 1
0750128-37	79- 8
0750128-37	80- 9
0750128-38	79- 5
0750128-38	80- 7
0750128-40	79- 1
0750128-42	79- 9
0750128-42	80- 10
0750128-44	79- 14

PART NUMBER	FIGURE AND INDEX NO.
0750128-44	80- 16
0750128-50	80- 16
0750128-53	80- 29
0750129-1 -12.96	83- 1
0750129-2 - 12.96	83- 2
0750130-10	83- 5
0750130-11 - 63.05	83- 11
0750130-12 - 19.80	83- 9
0750130-13 - 70.07	83- 12
0750130-14	83- 6
0750130-3 - 22.23	83- 20
0750130-31	83- 23
0750130-4	83- 21
0750130-42 - 7.10	83- 17
0750130-43	83- 7
0750130-44	83- 10
0750130-46 56.38	83- 13
0750130-48 63.26	83- 19
0750130-5	83- 22
0750130-6	83- 16
0750130-9 - 349.60	83- 8
0750132-1	76- 3
0750132-1	77- 3
0750132-2	76- 4
0750132-2	77- 4
0750133-1	77- 25
0750133-15	77- 37
0750133-16	77- 36
0750133-17	77- 36
0750133-18	77- 25
0750133-21	77- 29
0750133-22	77- 39
0750133-23	77- 40
0750133-7	77- 28
0750133-8	77- 29
0750133-9	77- 32
0750135-1	79- 28
0750135-1	80- 38
0750135-1	80- 41
0750135-10	79- 37
0750135-10	80- 45
0750135-11	80- 46
0750135-3	79- 35
0750135-3	80- 44
0750135-7	79- 29
0750135-8	79- 36
0750135-8	79- 36
0750135-8	80- 45
0750135-8	80- 45
0750137	76- 2
0750137	77- 2
0750138	73- 24
0750138	74- 23
0750139	73- 43
0750139	74- 45
0750140-5	111- 5
0750140-6	76- 54
0750140-6	77- 58
0750141-1	76- 55
0750142-1	76- 36
0750142-1	77- 41
0750144-1	77- 25
0750146-1	71- 59
0750146-1	71A- 57
0750146-3	71- 59
0750146-3	71A- 57
0750147-3	99- 38
0750147-5	99- 25
0750148-1	80- 55
0750148-2	80- 52
0750149-1	80- 57
0750149-2	80- 58
0750149-3	80- 59
0750149-4	80- 60
0750149-5	80- 61

PART NUMBER	FIGURE AND INDEX NO.
0750150-1	76- 51
0750150-1	77- 55
0750152-1	80-51A
0750152-2	77-64A
0750153-10	99A- 10
0750153-3	99A- 12
0750153-8	99A-
0750156-1	77- 34
0750158-1	77- 15
0750159-1	74- 44
0750282-1	74- 46
0750283-1	77- 59
0750290-10	82- 7
0750290-14	82- 18
0750290-19	82- 2
0750290-20	82- 2
0750290-23	82- 5
0750290-24	82- 5
0750290-25	82- 17
0750290-26	82- 17
0750290-27	75- 9
0750290-27	82-
0750290-28	75- 9
0750290-28	82-
0750290-3	82- 1
0750290-6	82- 11
0750290-7	82- 12
0750290-8	82- 13
0750290-9	82- 14
0750291	128- 5
0751000	75- 8
0751001-1	76- 8
0751001-13	77- 8
0751001-23	76- 8
0751001-23	122- 66
0751001-23 - 383.50	123- 64
0751001-25	77- 8
0751001-25	122- 66
0751001-25	123- 64
0751004-1	74- 6
0751004-2	74- 7
0752000-101	67- 1
0752000-101	68- 1
0752000-102	67- 25
0752000-103	67- 55
0752000-103	68- 54
0752000-103	69- 53
0752000-103	70- 40
0752000-104	67- 56
0752000-104	68- 55
0752000-104	69- 54
0752000-104	70- 41
0752000-109	67- 42
0752000-111	67- 23
0752000-111	67- 52
0752000-111	68- 20
0752000-111	68- 51
0752000-112	67- 41
0752000-112	68- 40
0752000-112	69- 45
0752000-112	70- 38
0752000-113	67- 41
0752000-113	68- 40
0752000-113	69- 45
0752000-113	70- 37
0752000-115	70- 29
0752000-116	67- 42
0752000-116	67- 63
0752000-116	68- 41
0752000-116	68- 62
0752000-116	69- 46
0752000-116	69- 52
0752000-117	67- 17
0752000-117	68- 15
0752000-117	69- 16

PART NUMBER	FIGURE AND INDEX NO.
0752000-117	70- 17
0752000-117	71- 13
0752000-117	71A- 10
0752000-118	67- 40
0752000-118	68- 39
0752000-118	69- 44
0752000-118	70- 22
0752000-119	67- 40
0752000-119	68- 39
0752000-119	69- 44
0752000-119	70- 22
0752000-122	67- 4
0752000-122	68- 4
0752000-122	69- 5
0752000-122	70- 6
0752000-123	67- 28
0752000-124	67- 49
0752000-124	68- 48
0752000-125	67- 18
0752000-125	68- 16
0752000-126	67- 36
0752000-126 - 24.24	68- 35
0752000-126	69- 21
0752000-127 - 83.07	67- 36
0752000-127	68- 35
0752000-127	69- 21
0752000-132	67- 59
0752000-133	67- 59
0752000-134	67-
0752000-135	67- 32
0752000-135	68- 31
0752000-135	69- 36
0752000-136	67- 33
0752000-136	68- 32
0752000-136	69- 36
0752000-137	67- 34
0752000-137	68- 33
0752000-137	69- 37
0752000-138	67- 35
0752000-138	68- 34
0752000-138	69- 37
0752000-139	68- 26
0752000-142	68- 58
0752000-142	69- 48
0752000-143	68- 58
0752000-143	69- 48
0752000-144	68- 27
0752000-144	69- 35
0752000-149	68- 22
0752000-15	67- 30
0752000-15	68- 29
0752000-15	69- 39
0752000-15	70- 36
0752000-150	68-
0752000-152	69- 34
0752000-165	69- 25
0752000-166	69- 25
0752000-17	67- 20
0752000-17	68- 18
0752000-18	67- 21
0752000-18	68- 18
0752000-19	67- 4
0752000-19	68- 4
0752000-19	69- 4
0752000-19	70- 5
0752000-19	71- 9
0752000-21	67- 51
0752000-21	68- 50
0752000-22	67- 39
0752000-22	68- 38
0752000-22	69- 24
0752000-23	67- 7
0752000-23	68- 7
0752000-23	69- 8
0752000-23	70- 7

PART NUMBER	FIGURE AND INDEX NO.
0752000-24	67- 8
0752000-24	68- 7
0752000-24	69- 8
0752000-24	70- 7
0752000-27	67- 45
0752000-28	67- 37
0752000-28	68- 36
0752000-28	69- 22
0752000-29	67- 38
0752000-29	68- 37
0752000-29	69- 23
0752000-34	67- 60
0752000-34	68- 59
0752000-34	69- 49
0752000-35	67- 31
0752000-35	68- 30
0752000-35	69- 38
0752000-36	67- 29
0752000-36	68- 28
0752000-36	69- 33
0752000-38	67- 46
0752000-43	67- 62
0752000-43	68- 61
0752000-43	69- 51
0752000-44	67- 62
0752000-44	68- 61
0752000-44	69- 51
0752000-48	67- 11
0752000-48	68- 9
0752000-48	69- 10
0752000-48	70- 8
0752000-49	67- 10
0752000-49	68- 9
0752000-49	69- 10
0752000-49	70- 8
0752000-50	67- 44
0752000-51	67- 43
0752000-52	67- 43
0752000-55	67- 5
0752000-55	68- 5
0752000-55	69- 6
0752000-55	70- 9
0752000-56	67- 14
0752000-56	68- 12
0752000-56	69- 13
0752000-56	70- 14
0752000-56	71- 10
0752000-56	71A- 7
0752000-57	67- 47
0752000-60	67- 51
0752000-60	68- 50
0752000-61	67- 39
0752000-61	68- 38
0752000-61	69- 24
0752000-63	67- 6
0752000-63	68- 6
0752000-63	69- 7
0752000-63	70- 10
0752000-63	71- 7
0752000-64	67- 13
0752000-64	68- 11
0752000-64	69- 12
0752000-64	70- 11
0752000-64	71- 8
0752000-64	71A- 5
0752000-7	67- 19
0752000-7	68- 17
0752000-8	67- 50
0752000-8	68- 49
0752001-1	67- 46
0752001-1	75- 37
0752001-2	67- 47
0752002-100	72- 1
0752002-100	134-
0752002-102	72- 1

PART NUMBER	FIGURE AND INDEX NO.
0752002-102	134-
0752002-13	72- 3
0752002-98	72- 1
0752002-98	134-
0752004-1	72- 24
0752004-2	72- 26
0752004-6 - 106.10	72- 23
0752005-1	2A- 38
0752005-4	72- 20
0752006-1	72- 10
0752006-2	72- 5
0752007-1	68- 41
0752007-1	69- 26
0752007-10	68- 47
0752007-10	69- 28
0752007-10	70- 35
0752007-11	68- 47
0752007-11	69- 28
0752007-11	70- 32
0752007-12	68- 47
0752007-12	69- 28
0752007-13	68- 42
0752007-13	69- 30
0752007-3	68- 44
0752007-3	69- 31
0752007-4	68- 45
0752007-4	69- 32
0752007-9	68- 46
0752007-9	69- 27
0752007-9	70- 33
0752008-495	68- 43
0752008-495	69- 29
0752009-495	70- 27
0752010-1	70-
0752010-13	70- 24
0752010-22	70- 19
0752010-23 - 337.10	69- 2
0752010-23	70- 2
0752010-24	70- 30
0752010-25	70- 31
0752010-26	70- 21
0752010-27	70- 21
0752010-41	70- 25
0752010-43	70- 28
0752010-44	70- 34
0752010-45	70- 23
0752010-46	70- 23
0752010-47	70- 25
0752010-48	70- 26
0752010-79	70-
0752010-80	70- 19
0752010-84	70- 25
0752010-85	70- 25
0752010-86	70- 26
0752010-87	70- 23
0752010-88	70- 23
0752010-89	70- 21
0752010-90	70- 21
0752010-93	70- 22
0752010-94	70- 22
0752011-1 49.19	69- 40
0752011-1	70- 38
0752011-12	69- 41
0752011-12	70- 39
0752011-18	69- 43
0752011-19	69- 43
0752011-20	69- 18
0752011-20	70- 19
0752011-21	69- 18
0752011-21	70- 19
0752011-4	69- 42
0752011-5 85.32	69- 17
0752011-5	70- 18
0752012-1	69-
0752012-2	69- 19

PART NUMBER	FIGURE AND INDEX NO.
0752012-3	69- 19
0752012-4	69-
0752012-5	69- 19
0752012-6	69-
0752013-1	71A-39A
0752013-2	71A-39A
0752014-1	71- 45
0752014-1	71A- 43
0752014-10	71- 54
0752014-10	71A- 52
0752014-11	71- 48
0752014-11	71A- 46
0752014-12	71- 55
0752014-12	71A- 53
0752014-14	71- 51
0752014-14	71- 58
0752014-15	71- 49
0752014-15	71- 56
0752014-15	71A- 47
0752014-15	71A- 54
0752014-17	71- 46
0752014-17	71- 53
0752014-17	71A- 44
0752014-17	71A- 51
0752014-2 + Ed. 27	71- 52
0752014-2	71A- 50
0752014-9	71- 47
0752014-9	71A- 45
0752015-10	71- 21
0752015-10	71A- 16
0752015-11	71- 30
0752015-12	71- 30
0752015-13	71- 31
0752015-14	71- 31
0752015-19	71- 24
0752015-19	71A- 18
0752015-2	71- 2
0752015-21	71- 26
0752015-21	71A- 20
0752015-22	71- 27
0752015-22	71A- 21
0752015-23	71- 34
0752015-23	71A- 28
0752015-26	71- 5
0752015-27	71- 5
0752015-29	71- 6
0752015-31	71- 22
0752015-39	71- 25
0752015-39	71A- 19
0752015-7	29
0752015-8	33A
0752015-8	71A- 27
0752015-9	29
0752016-1	71- 36
0752016-1	71A- 33
0752016-7	71- 36
0752016-7	71A- 33
0752017-1	20- 37
0752017-1	22- 46
0752017-2	20- 37
0752017-2	22- 46
0752018-1	71- 35
0752018-1	71A- 32
0752018-2	71- 39
0752018-2	71A- 36
0752019-1	71- 40
0752019-10	71- 17
0752019-10	71A- 13
0752019-11	71- 17
0752019-11	71A- 13
0752019-2	71- 15
0752019-7	71- 16
0752019-8	71- 16
0752020-1	71- 41
0752020-1	71A- 38

PART NUMBER	FIGURE AND INDEX NO.
0752021-1	71- 36
0752021-1	71A- 33
0752022-1	71- 28
0752022-1	71A- 22
0752023-1	71- 37
0752023-1	71A- 34
0752023-2	71- 38
0752023-2	71A- 35
0752024-3	72- 14
0752024-3	136-
0752024-4	72- 14
0752024-4	136-
0752025-1	71- 42
0752025-1	71A- 40
0752025-7	71- 42
0752025-7	71A- 40
0752027-1	71- 36
0752027-1	71A- 33
0752030-5	71A- 12
0752030-6	71A- 12
0752031-15	71A- 25
0752031-16	71A- 25
0752031-17	71A- 26
0752031-18	71A- 26
0752031-19	71A- 2
0752031-20	71A- 2
0752031-200	71A- 11
0752031-201	71A- 1
0752031-202	71A- 37
0752031-203	71A- 15
0752031-22	71A- 6
0752031-24	71A- 3
0752031-26	71A- 4
0752031-27	71A- 1
0752031-28	71A- 15
0752031-29	71A- 11
0752031-30	71A- 37
0752031-31	71A- 17
0752031-7	71A- 23
0752031-8	71A- 24
0752032-1	71A- 14
0752033-1	20- 37
0752033-1	22- 46
0752033-2	20- 37
0752033-2	22- 46
0752037-1	77- 79
0752038-1	77- 81
0752609-2	71A- 49
0752609-2	71A- 56
0752610-1	111B- 10
0752611-1	111B- 12
0753000-1	29- 1
0753000-11	29- 12
0753000-12	29- 13
0753000-13	29- 6
0753000-13	30- 3
0753000-13	81- 16
0753000-13	81A- 20
0753000-14	29- 5
0753000-14	30- 4
0753000-15	29- 4
0753000-15	30- 3
0753000-18	29- 7
0753000-19	29- 15
0753000-20	29- 15
0753000-22	90- 6
0753000-23	29- 2
0753000-23	30- 6
0753000-24	29- 3
0753000-24	30- 6
0753000-3	29- 11
0753000-5	90- 6
0753000-7	29- 8
0753001	30- 7
0753002-2	30- 1

PART NUMBER	FIGURE AND INDEX NO.
0753002-3	30- 2
0753002-8	30- 1
0753003-1	31-16A
0753003-1	31A- 15
0753003-74	31A- 28
0753005	90- 22
0753007	90- 10
0753008-1	30- 12
0753009-1	20- 6
0753009-1	22- 7
0753009-2	20- 7
0753009-2	22- 8
0753010-1	85- 41
0753011-1	85-40B
0753016-1	111B- 4
0753017-3	30- 13
0756001	101- 6
0756001-1	101- 7
0756001-1	101- 7
0756001-2	101- 9
0756001-3	101- 4
0756001-4	60- 76
0756001-4	63- 3
0756001-4	63A- 3
0756001-4	81- 12
0756001-4	81A- 16
0756001-6	101- 8
0756001-7	101- 6
0756001-8	101- 24
0756002	101- 18
0760618-1	2B- 44
0760618-2	2B- 44
0760679-1	11- 41
0761202	108- 26
0761202-2	108- 31
0761202-3	95-18A
0761202-50	108- 30
0761205	110- 1
0761205-2	110- 2
0761205-3	110- 4
0761205-3	126- 3
0761210-1	110- 3
0761210-1	126- 2
0761210-4	110- 15
0770011-10	53- 31
0770011-11	53- 30
0770011-12	53- 36
0770011-13	53- 35
0770011-14	53- 36
0770011-15	53- 35
0770011-16	120- 37
0770011-16	120B- 56
0770011-17	120- 35
0770011-17	120B- 58
0770011-18	120- 11
0770011-19	120- 1
0770011-19	120A- 20
0770011-22	120- 53
0770011-24	120- 6
0770011-24	120A- 8
0770011-29	120- 23
0770011-29	120A- 59
0770011-30	120- 21
0770011-30	120A- 55
0770011-31	120- 72
0770011-33	120- 73
0770011-33	120A- 98
0770011-34	120- 77
0770011-35	120- 79
0770011-36	120- 81
0770011-37	120- 10
0770011-37	120A- 27
0770011-38	120- 30
0770011-4	120- 66
0770012-13	120- 5

PART NUMBER	FIGURE AND INDEX NO.
0770012-13	120- 8
0770012-13	120- 25
0770012-13	120- 27
0770012-13	120- 29
0770012-13	120- 31
0770012-13	120- 32
0770012-13	120A- 26
0770012-13	120A- 32
0770012-13	120A- 48
0770012-13	120B- 32
0770012-13	120B- 59
0770012-13	120B- 63
0770012-13	120B-63A
0770012-13	120B- 70
0770012-13	120C- 34
0770012-13	120C- 40
0770012-13	120C- 54
0770012-15	120- 68
0770012-15	120A- 99
0770012-15	120B- 48
0770012-17	120B- 67
0770012-17	120C- 41
0770012-18	120- 76
0770012-18	120B- 52
0770012-19	120- 39
0770012-19	120B- 34
0770012-20	120- 52
0770012-20	120B- 47
0770012-24	120B- 20
0770012-33	120B- 31
0770012-39	120B- 65
0770012-39	120C- 36
0770012-42	120B- 30
0770012-43	120B- 29
0770012-43	120C- 46
0770012-45	120A- 64
0770012-45	120A- 90
0770012-45	120C- 55
0770012-5	120B- 1
0770012-5	120C- 1
0770012-6	120B- 17
0770012-6	120C- 18
0770012-7	120- 2
0770012-7	120A- 1
0770012-7	120B- 60
0770012-8	120B- 19
0770012-8	120C- 20
0770012-9	120B- 64
0770012-9	120C- 35
0770028-3	120A-102
0770028-4	120A-103
0770028-5	120A- 95
0770028-6	120A- 96
0770036-1	120- 1
0770049-1	120- 67
0770056-1	63A- 91
0770057-1	63A- 94
0770657-1	111- 12
0791100-10	14- 1
0791100-10	16-
0791100-11	25- 10
0791100-12	25- 10
0791100-13	16- 39
0791100-13	25-
0791100-14	14- 1
0791100-14	16-
0791100-2	16- 47
0791100-3	16- 30
0791100-4	14- 1
0791100-4	16-
0791100-5	16- 39
0791100-5	25-
0791100-6	16- 71
0791100-6	17- 34
0791100-8	25- 10

PART NUMBER	FIGURE AND INDEX NO.
0791100-9	14- 1
0791100-9	16-
0791101-1	15- 1
0791101-1	17-
0791101-10	15- 1
0791101-10	17-
0791101-11	18A-
0791101-11	17- 26
0791101-12	18A- 2
0791101-13	18A-
0791101-14	15- 1
0791101-14	17-
0791101-2	17- 57
0791101-3	17- 25
0791101-3	18-
0791101-4	17- 21
0791101-5	15- 1
0791101-5	17-
0791101-6	15- 1
0791101-6	17-
0791101-7	18- 1
0791101-7	17- 25
0791101-8	15- 1
0791101-8	17-
0791101-9	18-
0791102-1	14- 1
0791102-1	16- 1
0791102-2	16- 44
0791102-3	16- 63
0791102-3	18A- 1
0791102-4	16- 40
0791102-4	25-
0791102-5	25- 1
0791102-6	16- 72
0791102-6	17- 35
0791102-7	18A-
0791102-8	14- 1
0791102-8	16- 1
0791200-1	14- 2
0791200-1	33-
0791200-2	33- 1
0791200-2	35-
0791200-3	14- 2
0791200-3	33-
0791200-4	14- 2
0791200-4	33-
0791200-5	33- 1
0791200-5	35-
0791200-6	14- 2
0791200-6	33-
0791200-7	33- 1
0791200-7	35-
0791200-8	33-
0791201-1	15- 2
0791201-1	33-
0791201-2	33- 1
0791201-2	36-
0791201-3	15- 2
0791201-3	33-
0791201-4	33- 1
0791201-4	36-
0791300-1	16- 87
0791300-1	19-
0791300-10	23- 23
0791300-11	16- 87
0791300-11	19-
0791300-12	16- 87
0791300-12	19-
0791300-13	27- 1
0791300-14	16- 87
0791300-14	20-
0791300-15	27- 1
0791300-16	27- 1
0791300-2	19-
0791300-2	20-

PART NUMBER	FIGURE AND INDEX NO.
0791300-2	29-
0791300-3 23.16	19- 31
0791300-3	20- 30
0791300-4	27- 1
0791300-5	19- 18
0791300-5	20- 18
0791300-6	19- 22
0791300-6	20- 22
0791300-7	27- 1
0791300-8	19- 1
0791300-8	20- 1
0791300-8	23- 1
0791300-9	23- 12
0791301-1	17- 1
0791301-1	21-
0791301-10	17- 1
0791301-10	22-
0791301-12	22-
0791301-13	22-
0791301-14	17- 1
0791301-14	22-
0791301-2	21- 1
0791301-2	22-
0791301-2	30-
0791301-4	21- 3
0791301-4	28-
0791301-5	21- 25
0791301-5	22- 21
0791301-6	28- 6
0791301-7	17- 1
0791301-7	21-
0791301-8	21- 3
0791301-8	22- 3
0791301-8	28-
0791301-9	17- 1
0791301-9	21-
0791302-1	16- 87
0791302-1	20-
0791302-2	20-
0791302-2	30-
0791302-3	20- 30
0791302-4	20- 1
0791302-4	23- 1
0791302-5	20-
0791302-6	16- 87
0791302-6	20-
0792000-10	1- 16
0792000-10	2-
0792000-11	1- 16
0792000-11	2-
0792000-12	1- 16
0792000-12	2-
0792000-13	1- 16
0792000-13	2-
0792000-14	1- 16
0792000-14	2-
0792000-15	1- 16
0792000-15	2-
0792000-16	1- 16
0792000-16	2-
0792000-17	1- 16
0792000-17	2-
0792000-18	2-
0792000-19	2-
0792000-2	1- 16
0792000-2	2-
0792000-20	2-
0792000-21	2-
0792000-22	1A- 13
0792000-22	2A-
0792000-23	1A- 13
0792000-23	2A-
0792000-24	1A- 13
0792000-24	2A-
0792000-25	1A- 13

PART NUMBER	FIGURE AND INDEX NO.
0792000-25	2A-
0792000-3	3-
0792000-4	3-
0792000-5	1- 16
0792000-5	2-
0792000-6	1- 16
0792000-6	2-
0792000-7	1- 16
0792000-7	2-
0792000-8	3-
0792000-9	3-
0795201-1	69- 20
0795201-2	69- 20
0795201-3	69- 20
0795202-1	71- 4
0795202-2	71- 18
0795202-3	71- 20
0800023-3	55- 37
0800023-3	56- 37
0800023-5	56A- 41
0800023-5	56B- 13
0800030-14	124- 26
0800030-19	124- 33
0800030-2	124- 23
0800030-4	124- 32
0800030-5	124- 29
0800045-15	124A- 8
0800045-23	124A- 17
0800045-24	124A- 7
0800045-6	124A- 9
0800111-2	65- 17
0811490-6	87- 33
0811490-6	88- 37
0811725-40	44-36B
0811725-40	46-34B
08118	133- 7
0812200-106	56- 22
0812200-49	56- 24
0812353-2	111- 1
0812362-1	124- 9
0812363-1	124- 15
0812366-1	124- 30
0812369-1	124- 31
08125	130A- 4
0813150-54	87- 33
0813150-54	88- 37
0813150-55	87- 30
0813150-55	88- 33
0813156-4	87- 35
0813156-4	88- 40
0813514-5	93- 42
0813514-5	94- 51
0813514-6	93- 41
0813514-6	94- 50
0813569-2	63A- 70
0813577-7	93- 40
0813577-7	94- 49
0813610-3	84- 27
0813619-2	120D- 5
0813619-3	93- 6
0813619-3	94- 5
0813619-3	95- 5
08231	130A- 7
08231	133- 1
0841000-63	41- 60
0841000-64	41- 53
0841000-70	41- 49
0841000-83	41- 48
0841000-84	41- 37
0841000-84	41- 55
0841000-98	41- 35
0841005-6	41- 41
0841200-14	41- 26
0841200-15	41- 28
0841200-15	41A- 19

PART NUMBER	FIGURE AND INDEX NO.
0841200-18	41- 22
0841200-18	41A- 15
0841200-19	41- 21
0841200-19	41A- 14
0841200-21	41- 13
0841200-21	41A- 6
0841200-25	41- 29
0841200-25	41A- 20
0841200-42	41A- 22
0841200-7	41- 11
0841200-7	41A- 5
0842400-10	131-
0842400-16	131- 2
0842400-2	131- 6
0842400-2	131- 15
0842400-4	131- 18
0842400-7	131- 14
0842400-8	131-
0842405-4	131- 1
0842405-5	131- 1
0842406-1	131- 3
0850006-1	81- 46
0850006-1	81A- 45
0850007-4	81- 40
0850007-4	81A- 42
0850311-1	72- 12
0850410-1	101- 1
0850410-2	101- 1
0851583-2	101- 22
0851583-3	101- 20
0851592-1	101- 23
0851700-96	80- 47
0851700-96	80- 47
0861910	87- 52
0861910	88- 32
1-1/2-1-A-1	112- 11
1-1/2PF-11	112- 11
1-1/2PF-12	112- 11
1-656-2-.75	98- 25
1A0218	99A- 10
1A0221-1	99A- 2
1A0233	99A- 11
1A0235	99A- 10
1A1002X	53- 32
100FP	66- 1
10004-101	65- 24
10004-98	65- 4
10180-002-5	96-11A
10182-006	65- 4
102PDLN-4	63- 58
102PDLN-4	63A- 59
102PLDN-4	62- 4
102PLDN-8	94- 43
102PLDN-8	62- 4
1032X5/8	53- 23
109450	99- 30
109531	99- 31
109532	99- 31
11105B	113- 7
1111-51772	98- 25
1114-5	6- 14
1200039-1	10A- 35
1200039-1	113- 10
1200039-2	10A- 35
1200052-1	124A- 19
1200054-2	124A- 10
1200055-1	124A- 21
1200057-1	124- 2
1200057-1	124A- 2
1200058-1	124- 1
1200058-1	124A- 1
1200059-1	124A- 26
1200065-3	6A- 2
1200065-4	6A- 2
1200077-10	120A- 65

PART NUMBER	FIGURE AND INDEX NO.
1200077-10	120C- 56
1200077-12	120C- 64
1200077-13	120A- 97
1200077-15	120C- 47
1200077-16	120A- 15
1200077-17	120A- 6
1200077-18	120A- 13
1200077-2	120A- 17
1200077-22	120A- 12
1200077-23	120A- 14
1200077-25	120C- 59
1200077-26	120C- 60
1200077-27	120A- 28
1200077-28	120A- 29
1200077-3	120A- 86
1200077-3	120C- 80
1200077-31	120A- 30
1200077-34	120A- 31
1200077-37	120A- 91
1200077-39	120C- 31
1200077-4	120A- 86
1200077-4	120C- 80
1200077-5	120A- 74
1200077-5	120C- 67
1200077-7	120A- 85
1200077-7	120C- 81
1200077-8	120A- 87
1200077-8	120C- 58
1200077-8	120C- 82
1200077-9	120A- 74
1200077-9	120C- 78
1200078-10	120C- 52
1200078-11	120C- 43
1200078-12	120C- 42
1200078-15	120C- 53
1200078-2	120C- 29
1200078-7	120C- 25
1200079-10	120A- 37
1200079-2	120A- 35
1200079-3	120A- 36
1200079-4	120A- 49
1200079-6	120A- 49
1200079-8	120A- 47
1200079-9	120A- 46
1200084-6	53- 38
1200084-7	53- 37
1200086-5	50- 14
1200086-6	50- 15
1200089-2	51- 6
1200089-2	51- 8
1200089-3	51- 6
1200089-3	51- 8
1200092-1	56B- 51
1200103-3	57- 29
1200103-4	57- 29
1200103-5	57- 28
1200104-1	56- 7
1200106-51	6A- 14
1200106-52	6A- 14
1200108-1	55- 38
1200108-1	56- 38
1200108-1	56A- 42
1200108-1	56B- 14
1200116-1	65- 14
1200116-2	65- 14
1200130-1	114- 37
1200134-1	56B- 15
1200136-1	56B- 26
1200137-1	56B- 54
1200138-1	56B- 44
1200139-1	56B- 41
1200141-1	56B- 39
1200141-2	56B- 39
1200142-1	56B- 24
1200142-2	56B- 24

PART NUMBER	FIGURE AND INDEX NO.
1200143-1	56B- 52
1200143-2	56B- 52
1200146-1	56B- 35
1200147-1	56B- 28
1200147-2	56B- 29
1200152-1	56B- 30
1200154-1	56B- 45
1200155-1	56B- 43
1200156-1	56B- 47
1200157-1	56B- 37
1200158-1	56B- 61
1200158-5	56B- 61
1200159-1	56B- 49
1200161-1	56B- 17
1200162-21	56B- 1
1200162-22	56B- 1
1200162-23	56B- 16
1200162-24	56B- 16
1200162-25	56B- 3
1200162-26	56B- 3
1200162-27	56B- 20
1200162-28	56B- 9
1200163-1	56B- 23
1200163-2	56B- 23
1200164-1	56B- 19
1210020-1	16- 1
1210020-1	17- 51
1210029-2	25- 2
1210029-2	26- 12
1210040-10	46A- 27
1210040-21	46A- 1
1210040-22	46A- 1
1210040-23	46A- 26
1210040-8	46A- 26
1210054-1	51- 6
1210054-1	51- 8
1212002-1	33- 37
1212004-1	36-20A
1212005-1	36- 16
1212005-2	36- 17
1212011-1	35- 27
1212011-1	36- 19
1212012-1	35- 27
1212012-1	36- 19
1213035-4	63A- 8
1213127-1	23- 2
1213127-1	24- 1
1220002-21	5A- 2
1220002-22	5A- 7
1220002-25	5A- 13
1220002-26	5A- 14
1220002-27	5A- 11
1220002-36	3A-
1220002-37	3A-
1220002-38	3A- 10
1220002-39	3A- 9
1220002-40	3A- 12
1220002-41	3A- 11
1220003-15	5A- 1
1220003-16	5A- 6
1220003-17	3A- 17
1220003-18	3A- 16
1220003-201	1A- 13
1220003-201	2B-
1220004-15	5A- 1
1220004-16	5A- 6
1220004-17	3A- 17
1220004-18	3A- 16
1220004-202	1A- 13
1220004-202	2B-
1220006-21	5A- 16
1220006-22	5A- 16
1220007-19	5A- 17
1220007-20	5A- 17
1220019-1	2B- 14

PART NUMBER	FIGURE AND INDEX NO.
1220019-10	2B- 13
1220019-2	2B- 14
1220019-3	2B- 15
1220019-4	2B- 15
1220019-5	2B- 41
1220019-6	2B- 41
1220019-9	2B- 13
1220022-1	6A- 41
1221010-5	2- 36
1221010-5	2A- 25
1221010-5	2B- 30
1221010-6	2- 36
1221010-6	2A- 25
1221010-6	2B- 30
1221010-7	2- 36
1221010-7	2A- 25
1221010-7	2B- 30
1221101-1	2A- 7
1221101-1	2B- 10
1221101-2	2A- 7
1221101-2	2B- 10
1231000-1	10A-
1231000-11	10A-
1231000-12	10A- 32
1231000-19	10A- 34
1231000-2	10A- 31
1231000-3	10A- 32
1231000-4	10A- 33
1231000-5	10A- 34
1231000-6	10A- 37
1231001-2	12A- 28
1231001-3	12A- 27
1231001-6	12A-
1231002-1	10A- 9
1231002-2	10A- 10
1231003-1	10A- 11
1231004-2	10A- 13
1231004-3	10A- 12
1231005-1	10A- 14
1231005-2	10A- 15
1231006-1	10A- 16
1231007-1	10A- 17
1231008-1	10A- 18
1231009-1	10A- 19
1231010-1	10A- 20
1231011-1	12A- 8
1231012-1	10A- 21
1231013-1	10A- 22
1231014-1	10A- 23
1231014-2	10A- 24
1231015-1	12A- 3
1231015-2	12A- 4
1231015-3	12A- 5
1231016-1	12A- 6
1231017-1	12A- 7
1231020-1	12A- 9
1231021-1	12A- 13
1231021-2	12A- 14
1231021-3	12A- 15
1231022-1	12A- 16
1231023-1	10A- 25
1231023-16	12A- 17
1231023-17	12A- 19
1231023-18	12A- 21
1231023-19	12A- 18
1231023-2	10A- 26
1231023-20	12A- 20
1231023-21	12A- 22
1231023-3	10A- 27
1231025-1	10A- 28
1231025-2	10A- 29
1231026-1	12A- 23
1231026-2	12A- 23
1231027-1	10A- 38
1231027-2	10A- 39

PART NUMBER	FIGURE AND INDEX NO.
1231028-1	10A- 40
1231029-1	12A- 30
1231029-2	12A- 30
1231032-1	12A- 31
1231033-1	12A- 8A
1234029-1	13- 32
12349	141- 27
1241063-2	38- 64
1241063-2	39- 51
1243012-4	41- 17
1243012-4	41A- 10
1243030-1	41- 84
1243030-1	41A- 48
1243030-2	41- 84
1243030-2	41A- 48
1243030-3	41- 84
1243030-3	41A- 48
12439	141- 49
1253032-1	85- 42
1253033-2	85- 44
1253034-1	85- 43
1253037-1	85- 45
1253040-1	85- 44
1253041-1	85- 46
1260016-1	108- 42
1260043-2	95-39A
1260105-9	106- 4
1270015-1	111- 36
13830	129- 18
13889	129- 18
1441003-1	38- 17
153-8	130A- 2
154-6	130A- 3
155-2	130A- 1
161-18	130A- 5
162-16	130A- 6
17093	141- 22
180004	128A- 51
180231	128A- 51
1816	60- 12
1816	63- 45
1816	63A- 45
1816	114- 21
182194	128A- 43
182684	128A- 52
184793	128A- 13
186283	128A- 27
1863	133- 20
186320	128A- 54
186320	128A- 61
186321	128A- 55
1866-22	130A- 8
188036	128A- 37
188302	128A- 37
188434	128A- 30
189522	128A- 26
189798	128A- 47
189880	128A- 32
190094	128A- 17
190189	128A- 34
190576	128A- 36
190733	128A- 12
190734	128A- 6
191869	128A- 38
192103	128A- 18
192315	128A- 46
192528	128A- 46
192558	128A- 63
193385	128A- 19
196000	128A- 15
2A0081	99A- 1
2N441	111- 2
200AC-6	137- 18
204864	128A- 9
204865	128A- 7

PART NUMBER	FIGURE AND INDEX NO.
206336	128A- 5
206337	128A- 25
210022	128A- 2
210023	128A- 22
210025	128A- 48
210031	128A- 10
210034	128A- 42
210035	128A- 39
210036	128A- 8
210039	128A- 29
210044	128A- 49
210067	128A- 52
210068	128A- 57
210071	128A- 59
210076	128A- 53
210077	128A- 56
210078	128A- 58
210095	128A- 11
210100	128A- 44
210101	128A- 45
210109	128A- 1
210111	128A- 14
210112	128A- 16
210119	128A- 50
210206	128A- 7
210207	128A- 14
210214	128A- 45
210253	128A- 1
210257	128A- 62
210259	128A- 2
210268	128A- 50
210269	128A- 50
210272	128A- 22
210289	128A- 15
210293	128A- 28
218036	128A- 3
218446	128A- 60
22-FH-428	129- 15
22A21-22-02	12- 20
22A5-02	67- 24
22A5-02	67- 53
22A5-82	49- 30
22A5-82	67- 25
22A5-82	67- 54
22FH-428	130- 5
22NA17A-054	121- 9
22NA17A-054	121- 14
22NA17A-054	122- 11
22NA17A-054	122- 16
22NA17A-054	123- 12
22NKM-02	27- 9
2504-1	133- 19
295055	6A- 6
295055	6A- 6
2981A-4-27	63- 13
2981A-4-27	63A- 16
31111	113- 8
32	58- 24
32	59- 22
32	60- 20
32	63- 32
32	63A- 32
3219	133- 9
3222 1.65	133- 10
3225	133- 23
3226	133- 5
3236C-2	133- 21
3257	133- 13
3258	133- 11
3258-1	133- 12
33	58- 24
33	59- 22
33	60- 20
33	63- 32
33	63A- 32

PART NUMBER	FIGURE AND INDEX NO.
33-199-1	100- 12
33-199-4	100- 9
33-199-45B	100- 14
33-199-5	100- 10
33-199-6	100- 11
33-199-8	100- 13
33-199-902	100- 8
330R	63A- 81
34	58- 24
34	59- 22
34	60- 20
34	63- 32
34	63A- 32
3407	133- 8
3408	133- 14
3408-1 .42	133- 15
3408-2	133- 17
3410	133- 6
3411 3410-3 → 2110	133- 16
3412	133- 1
3413	133- 2
36837	123- 66
400050	76- 70
400050	77- 75
4002-G	71A- 30
4002-H	71A- 6A
4002-H	71A- 29
4002-H	71A- 31
4002-H	71A- 39
4002-244-16	20- 8
4002-244-16	22- 9
4002-244-16	71A- 3
4002-3	71A- 30
4002-4	71A- 6A
4002-4	71A- 29
4002-4	71A- 31
4002-4	71A- 39
400433	128A- 33
416-53	6A- 38
43036	141- 50
45569	141- 17
4600-02	16- 62
4600-02	1- 28
47A1562	41- 19
471036	141- 36
474910	141- 51
474924	141- 20
474931	141- 34
474932	141- 33
474945	141- 26
474948	141- 30
475005	141- 14
475067	141- 19
475127	141- 37
475229	86- 2
475232	86- 3
475318	141- 28
475768	141- 15
475928	141- 48
475939	141- 16
476210	86- 6
476226	141- 25
476227	141- 31
48143	35- 44
48152	58- 31
48152	59- 8
48155	5- 15
48172	8- 20
484121	141- 54
484140	141- 39
484230	141- 29
484857	141- 40
484921	141- 32
484955	141- 38
484986	141- 44

PART NUMBER	FIGURE AND INDEX NO.
485037	141- 13
485152	141- 41
485201	86- 6
49160	81- 50
49160	81A- 49
49160	120- 34
49160	120B- 54
49165-21	120A- 69
49165-21	120C- 62
49165-22	120A- 70
49166-21	120- 33
49166-21	120B- 53
49166-21	120C- 50
49167-21	120C- 48
49265	60- 61
49265	63- 80
49265	63A- 82
49265-F-938	61- 9
49265-K-2215	63A- 67
49265F-52	63- 66
49265F-938	57A- 13
49265F-938	62- 13
49265F938	52- 7
49265F938	52- 7A
49265F938	53- 24
49330	14- 24
49330	15- 23
49330	52- 33
49330	121- 47
49330	122- 36
49330	123- 35
49330	126- 59
5-9-028-125-0562	48- 10
5-9-028-125-0562	48A- 18
51058	79- 49
51149	15- 27
51149	25- 36
51149	49- 37
51161	36- 33
511846-4	129- 39
541137-11	123- 46
60 OHM-10W	58- 34
60 OHM-10W	59- 33
61086	141- 18
627273	111- 7
627377	111- 7
627773	76- 7
627773	77- 7
64459	76- 72
64459	77- 77
64460	76- 71
64460	77- 76
6515	58- 36
6515	59- 35
7/16-20X3	134- 24
7228	141- 11
7283	57- 9
7283	57- 19
76694	141- 42
76784	141- 47
77856	141- 23
77863	141- 45
79003	141- 52
79372	141- 46
79404	141- 43
79404	141- 53
807	51- 3
83624	141- 3
83624	141- 6
83624	141- 55
838-2	134- 14
838-3	134- 14
840-1	134-
840-35	134-
840-47	134-

PART NUMBER	FIGURE AND INDEX NO.
840-51	134-
[illegible]-6	134-
[illegible]3-2	134- 46
8433S	134- 46
85040	141- 9
8833S	134- 46
902-4	137- 12
95-0476	129- 17
95-0477	129- 3
95-0477	129- 16
95-1043	129- 19
95-10993	132- 12
95-1567	129- 12
95-2243	129- 21
95-2244	129- 22
95-2313	129- 9
95-25059	129-37A
95-25412	129- 29
95-25413	129- 30
95-3474	129- 1
95-4802	129- 27
95-4803	129- 28
95-4909	129- 35
95-5163	129- 36
95-5163	132- 48
95-5216	132- 9
95-5216	132- 16
95-5217	132- 18
95-5219	129- 11
95-5242	132- 7
95-5383	129- 44
95-5383	132- 35
95-5761	129- 42
95-7126	129- 36
9500471	130- 12
9500472	130- 6
9510155	129- 26
9510155	132- 44
9510186	130- 11
9510236	130- 9
9510731	129- 33
9510734	132- 43
9510816	132- 8
9510871	132- 10
9510957	129- 38
9510957	132- 51
9510965	132- 27
9510966	132- 26
9510971	132- 47
9510977	132- 21
9510978	132- 20
9510983	132- 19
9510988	132- 32
9511005	132- 31
9511103	132- 33
9511269	132- 43
9511271	132- 41
9511567	130- 5
9520061	132- 17
9520101	129- 4
9520206	130- 3
9520424	132- 25
9520448	129- 42
9520448	132- 39
9520644	132- 11
9520657	129- 5
9520675	132- 33
9520925	130- 2
9521184	129- 24
9521184	129- 25
9521246	132- 28
9521698	129- 6
9523482	129- 43
9523566	130- 13
9524192	130- 1

PART NUMBER	FIGURE AND INDEX NO.
9524193	130- 2
9524201	129- 8
9524202	129- 10
9524209	129- 34
9524218	129- 20
9524223	129- 26
9524343	129- 34
9524463	129-37A
9530084	132- 42
9530287	129- 31
9530373	132- 22
9530374	132- 22
9530593	132- 34
9532129	129- 32
9532671	130- 2
9532672	130- 1
9541458	129- 25
954545	130- 4
954547	130- 10
955154	130- 11
956891	130- 13
98293	71- 60
98293-2-.250	71A- 58
99608	52- 1
99608	61- 33
99608-K2215	52- 24
99785-2	71- 60
99785-2	71A- 58
99785-2	77-40B
99785-2	77- 45
99871C.098	75- 36
99871C.098	76- 39
99967-C-.098	77- 38
99967-C-098	71- 36
99967-C-098	71A- 33

PART NUMBER	FIGURE AND INDEX NO.